Eddy Street Commons Phase II
Parking Garage
Project Number 108-004

Drawing Index

Structural

S001	Cover Sheet
S002	General Notes
S100	Foundation Plan
S101	Basement Framing Plan
S102	First Floor Framing Plan
S102A	First Floor Slab Reinforcing Plan
S103	Second Floor Framing Plan
S103A	Second Floor Slab Reinforcing Plan
S104	Third Floor Framing Plan
S104A	Third Floor Slab Reinforcing Plan
S105	Fourth Floor Framing Plan
S105A	Fourth Floor Slab Reinforcing Plan
S106	Partial Framing Plans
S200	Footing Schedule and Typical Details
S201	Sections and Details
S202	Sections and Details
S300	Concrete Column Schedule, Sections and Details
S301	Post-Tensioned Beam Schedule
S302	Post-Tensioned Sections and Details
S303	Post-Tensioned Sections and Details
S304	Post-Tensioned Sections and Details
S305	Sections & Details
S306	Post-Tensioned Sections and Details
S307	Sections and Details
S308	Sections and Details
S309	Concrete Beam Schedule, Sections and Details
S400	Typical CMU Details & Notes
S500	Canopy Framing Plan, Sections and Details
S501	Sections and Details

Architectural

A000	General Notes, Abbreviations and Symbols, Vicinity Map
A001	Reference Site Plan
A002	Code Summary
A003	Construction Assemblies
A004	Partition Types
A101	Basement Level Floor Plan
A102	Ground Level Floor Plan
A103	Second Level Floor Plan
A104	Third Level Floor Plan
A105	Fourth Level Floor Plan
A106	Roof Plan
A201	Door and Finish Schedules
A211	Enlargeol Plans
A212	Enlargeol Plans
A301	Partial Garage Elevations
A301A	Partial Garage Elevations (Alternate No. 5)
A302	Partial Garage Elevations
A401	Garage Sections
A402	Wall Sections
A403	Wall Sections
A404	Wall Sections
A405	Paseo/Mechanical Shaft Sections
A501	Stair #1 Plans and Sections
A502	Stair #2 Plans and Sections
A503	Stair #3 Plans and Sections
A504	Elevator Plans and Sections
A505	Elevator Plans and Sections
A511	Residential Trash Chute Plans and Sections
A601	Plan Details
A602	Plan Details
A603	Section Details
A604	Section Details
A605	Section/Roof Details
A606	Enlarged Grille and Railing Plans, Elevations, Sections and Details
A607	Canopy Plans, Sections and Details
A801	Bid Tabulation, Color and Finishes; Basement Level - Location Plan and Message Schedule
A802	Ground and Second Levels - Location Plans and Message Schedules
A803	Third and Fourth Levels - Location Plans and Message Schedules
A804	Design Intent Drawings

Mechanical, Plumbing, HVAC and Electrical

M001	Symbols and Abbreviations- Mechanical
P201	Foundation Plan - Plumnbing and Fire Protection
P202	Floor Plan - Basement Level - Plumbing and Fire Protection
P203	Floor Plan - Ground Level - Plumbing and Fire Protection
P204	Floor Plan - Second Level - Plumbing and Fire Protection
P205	Floor Plan - Third Level - Plumbing and Fire Protection
P206	Floor Plan - Fourth Level - Plumbing and Fire Protection
P301	Enlarged Plans - Plumbing and Fire Protection
P501	Details, Diagrams and Schedules - Plumbing and Fire Protection
H201	Floor Plan - Basement Level - HVAC
H202	Floor Plan - Ground Level - HVAC
H203	Floor Plan - Second Level - HVAC
H204	Floor Plan - Third Level - HVAC
H205	Floor Plan - Fourth Level- HVAC
H501	Schedule and Details - HVAC
E001	Symbols, Abbreviations and General Notes - Electrical
E101	Floor Plan - Basement Level - Electrical
E102	Floor Plan - Ground Level - Electrical
E103	Floor Plan - Second Level - Electrical
E104	Floor Plan - Third Level - Electrical
E105	Floor Plan - Fourth Level- Electrical
E301	Enlarged Floor Plans - Electrical
E401	Riser Diagram - Electrical
E501	Schedules - Electrical
E502	Schedules - Electrical

Parking and Revenue Control

Q1	Parking and Revenue Control Details and Schedule
Q2	Parking and Revenue Control Details and Schedule

South Bend Board of Public Works

Gary A. Gilot
President

Donald E. Inks
Member

Carl P. Littrell
Member

FINK ROBERTS & PETRIE, INC.
Consulting Engineers
4040 Vincennes Circle, Suite 300
Indianapolis, Indiana 46268

Eddy Street Commons
Phase II
Parking Garage
Project Number 108-004

Owner
City of South Bend, Indiana

Construction Manager
Kite Realty Group
30 South Meridian Street, Suite 1100
Indianapolis, Indiana 46204
317-577-5600

Structural Engineer
Fink, Roberts & Petrie, Inc.
4040 Vincennes Circle, Suite 300
Indianapolis, Indiana 46268
317-872-8400

Architect
Looney Ricks Kiss
175 Toyota Plaza, Suite 600
Memphis, Tennessee 38103
901-321-1440

Mechanical, Electrical & Plumbing Engineer
Circle Design Group
5510 South East Street, Suite F
Indianapolis, Indiana 46227
317-781-6200

Parking Consultant
Walker Parking Consultants
6602 East 75th Street, Suite 210
Indianapolis, Indiana 46250
317-842-6890

Civil Engineer/Landscape Architect
The Troyer Group
550 Union Street
Mishawaka, Indiana 46554
574-259-9976

100% Construction
Documents
January 23, 2008

REVISION DATE	REVISION DESCRIPTION

CERTIFIED BY

ISSUE DATE	01/23/08
ISSUE/REVISED NO.	07097
ISSUED/DRAWN BY	SVC
CHECKED BY	JMP

SHEET TITLE: COVER SHEET

SHEET NO.: S001

\\Frp_ml\com\VAULT\--\Projects\2007\07097\S001.DWG 01/22/08 15:51:33 Dwg Name: S001.DWG ctb FRPFULL.CTB

GENERAL NOTES

FOUNDATIONS

1. PREPARE AREAS OF THE SITE SUPPORTING STRUCTURE BY REMOVING TOPSOIL, EXISTING FILL, ORGANIC MATERIAL, OR FROZEN, WET, SOFT, LOOSE OR OTHERWISE UNSUITABLE MATERIALS.
2. PROOFROLL THE EXPOSED SUBGRADE WITH A MEDIUM-WEIGHT ROLLER TO DETERMINE IF ANY POCKETS OF SOFT, UNSUITABLE MATERIAL EXIST BENEATH THE EXPOSED SUBGRADE. REMOVE ANY UNSUITABLE MATERIAL ENCOUNTERED AND REPLACE WITH A WELL COMPACTED GRANULAR MATERIAL
3. PLACEMENT AND COMPACTION OF ENGINEERED FILL SHALL BE OVERSEEN BY THE ENGINEERING TESTING FIRM. PLACE FILL MATERIAL IN LAYERS NOT EXCEEDING 8 INCHES IN LOOSE THICKNESS. MECHANICALLY COMPACT EACH LAYER TO AT LEAST THE REQUIRED MINIMUM DRY DENSITY. REQUIREMENTS FOR MATERIALS, COMPACTION METHODS AND FIELD QUALITY CONTROL ARE OUTLINED IN DIVISION 2 OF THE PROJECT MANUAL.
4. ALL FOOTINGS SHALL BEAR ON FIRM NATURAL BEARING SOILS AS DEFINED IN SECTION 4.1 OF THE PROJECT'S GEOTECHNICAL REPORT PREPARED BY EARCH EXPLORATION INC. DATED DECEMBER 28, 2007. IF UNSUITABLE BEARING MATERIAL IS ENCOUNTERED BELOW THE PROPOSED FOOTING BEARING ELEVATION, THEN UNDERCUT SUCH MATERIALS UNTIL SUITABLE MATERIALS ARE ENCOUNTERED. BOTTOM OF FOOTING ELEVATION MUST BE AT THIS LOWER ELEVATION. COORDINATE COLUMN AND WALL HEIGHTS AND REINFORCING ACCORDINGLY. LEAN CONCRETE, FLOWABLE FILL OR ENGINEERED FILL IS NOT ALLOWED.
5. PLACE FOOTINGS THE SAME DAY EXCAVATIONS ARE OPENED. IF THIS IS NOT POSSIBLE, ADEQUATELY PROTECT THE EXPOSED MATERIAL IN THE BASES OF THE FOOTING EXCAVATIONS FROM ANY DETRIMENTAL CHANGE IN CONDITION SUCH AS FROM DISTURBANCE, RAIN OR FREEZING. SURFACE RUNOFF SHALL NOT BE ALLOWED TO ENTER THE EXCAVATIONS.
6. STRUCTURAL SLABS AND SLABS ON GRADE, PROVIDING TOP AND BOTTOM SUPPORT FOR CONCRETE WALLS RETAINING EARTH, MUST BE IN PLACE AND HAVE REACHED 70 PERCENT OF THEIR REQUIRED 28 DAY COMPRESSIVE STRENGTH BEFORE BACKFILLING OPERATIONS BEGIN.
7. CONCRETE WALLS RETAINING EARTH MUST HAVE REACHED 100 PERCENT OF THEIR REQUIRED 28 DAY COMPRESSIVE STRENGTH BEFORE BACKFILLING OPERATIONS BEGIN.
8. BACKFILL EACH SIDE OF CONCRETE WALLS, WITH EARTH ON BOTH SIDES, SIMULTANEOUSLY.
9. ONLY A WELL-GRADED, FREE-DRAINING GRANULAR MATERIAL SHALL BE USED FOR BACKFILL BEHIND ALL CONCRETE BASEMENT AND FREE-STANDING, CANTILEVERED RETAINING WALLS AND SHALL BE PLACED WITHIN A ZONE DEFINED BY A LINE EXTENDING UPWARD AND OUTWARD ON A 1 TO 1 (OR FLATTER) SLOPE FROM THE BASE OF THE WALL. REQUIREMENTS FOR MATERIALS AND COMPACTION METHODS ARE OUTLINED IN DIVISION 2 OF THE PROJECT MANUAL.
10. FOR INFORMATION REGARDING SUBSURFACE CONDITIONS, REFER TO GEOTECHNICAL ENGINEERING INVESTIGATION REPORT, PREPARED BY EARTH EXPLORATION, INC. DATED DECEMBER 28, 2007.
11. COMPACT ALL ENGINEERED FILL BENEATH SLABS ON GRADE AND OVER FOOTINGS TO AT LEAST 95% OF THE MODIFIED PROCTOR MAXIMUM DRY DENSITY, ASTM D-698. COMPACT ALL ENGINEERED FILL BEHIND ALL WALLS (BASEMENT WALLS & FREE-STANDING CANTILEVERED RETAINING WALLS) TO 95% OF THE MODIFIED PROCTOR MAXIMUM DRY DENSITY, ASTM D-698. COMPACT ALL ENGINEERED FILL BENEATH FOOTINGS TO AT LEAST 98% OF THE MODIFIED PROCTOR MAXIMUM DRY DENSITY, ASTM D-698. PLACEMENT AND COMPACTION OF ENGINEERED FILL SHALL BE OVERSEEN BY THE TESTING LABORATORY.
12. PLACE ALL FOOTINGS IN WOOD FORMS. (UNLESS OTHERWISE INDICATED ON THE STRUCTURAL DRAWING.)
13. A GEOTECHNICAL TESTING AGENCY SHALL INSPECT FOOTING EXCAVATIONS (AS DESCRIBED IN SECTION 5.3 OF THE GEOTECHNICAL STUDY) TO [1] VERIFY THAT THE SOIL AT THE BEARING ELEVATION IS OF THE TYPE DEFINED IN SECTION 4.1 OF THE GEOTECHNICAL STUDY TO ENSURE THAT CONDITIONS ARE SIMILAR TO THOSE UPON WHICH THE FOUNDATION RECOMMENDATIONS ARE BASED AND [2] VERIFY THE ALLOWABLE BEARING CAPACITY AT EACH SPREAD FOOTING AND EVERY 8 FEET ON CENTER FOR STRIP FOOTINGS PRIOR TO PLACEMENT OF CONCRETE. MAKE HAND AUGER BORINGS OR USE A HAND PENETRATION DEVICE IN BASE OF FOUNDATION EXCAVATIONS AND INSPECTION OF THE BASE OF THE FOOTING EXCAVATIONS SHALL BE DONE IN ACCORDANCE WITH THE PROJECT'S GEOTECHNICAL ENGINEERING INVESTIGATION REPORT PER NOTE 10. SEE "DESIGN INFORMATION" ON THIS DRAWING FOR ALLOWABLE NET BEARING PRESSURES.
14. SEE DETAIL B/S6 FOR CONSTRUCTION CRITERIA REGARDING ADJACENT FOOTING.
15. CENTER ALL COLUMN AND WALL FOOTINGS UNDER THE COLUMN OR WALL ABOVE UNLESS OTHERWISE INDICATED.

REINFORCING STEEL

1. PROVIDE MINIMUM CONCRETE COVER FOR REINFORCING STEEL IN ACCORDANCE WITH THE ACI "BUILDING CODE REQUIREMENTS FOR STRUCTURAL CONCRETE" (ACI 318-99), UNLESS OTHERWISE INDICATED.
2. REINFORCING STEEL SHALL BE SUPPORTED AND SECURED AGAINST DISPLACEMENT IN ACCORDANCE WITH THE CONCRETE REINFORCING STEEL INSTITUTE'S "MANUAL OF STANDARD PRACTICE". SEE SECTION 03200, CONCRETE REINFORCEMENT, OF THE PROJECT MANUAL FOR ADDITIONAL REQUIREMENTS.
3. DETAILS OF REINFORCING STEEL FABRICATION AND PLACEMENT SHALL CONFORM TO ACI "DETAILS AND DETAILING OF CONCRETE REINFORCEMENT" (ACI 315) AND "MANUAL OF ENGINEERING AND PLACING DRAWINGS FOR REINFORCED CONCRETE STRUCTURES" (ACI 315R) UNLESS OTHERWISE INDICATED.
4. SPREAD REINFORCING STEEL AROUND SMALL OPENINGS AND SLEEVES IN SLABS AND WALLS, WHERE POSSIBLE, AND WHERE BAR SPACING WILL NOT EXCEED 1.5 TIMES THE NORMAL SPACING. DISCONTINUE BARS AT LARGE OPENINGS, WHERE NECESSARY, AND PROVIDE AN AREA OF REINFORCEMENT, EQUAL TO THE INTERRUPTED REINFORCEMENT, IN FULL LENGTH BARS, DISTRIBUTING ONE-HALF EACH SIDE OF THE OPENING. WHERE SHRINKAGE AND TEMPERATURE REINFORCEMENT IS INTERRUPTED, ADD 2-#5 x OPENING DIMENSION +4'-0" ON EACH SIDE OF THE OPENING. PROVIDE #5 x 4'-0" DIAGONAL BARS IN BOTH FACES, AT EACH CORNER OF OPENINGS LARGER THAN 12 INCHES IN ANY DIRECTION.
5. REINFORCING STEEL BENDS, HOOKS AND LAP SPLICES SHALL CONFORM TO THE ACI "BUILDING CODE REQUIREMENTS FOR STRUCTURAL CONCRETE" (ACI 318-99) UNLESS OTHERWISE INDICATED.
6. PROVIDE STANDEES FOR THE SUPPORT OF TOP REINFORCEMENT FOR FOOTINGS AND MATS.
7. PROVIDE INDIVIDUAL HIGH CHAIRS WITH SUPPORT BARS, AS REQUIRED, FOR THE SUPPORT OF TOP REINFORCEMENT FOR SUPPORTED SLABS. DO NOT PROVIDE STANDEES.
8. PROVIDE PLASTIC, SNAP-ON SPACE WHEELS TO MAINTAIN REQUIRED CONCRETE COVER FOR VERTICAL WALL REINFORCEMENT.
9. PROVIDE FOOTING DOWELS FOR VERTICAL WALL REINFORCEMENT. DOWELS SHALL BE THE SAME SIZE AND SPACING AS THE VERTICAL WALL REINFORCEMENT, UNLESS NOTED OTHERWISE, WITH LAP SPLICES AS INDICATED ON THE APPLICABLE SECTIONS. INSTALL DOWELS IN THE FOOTING FORMS BEFORE CONCRETE IS PLACED, SUPPORTING AND TIEING THEM SECURELY IN POSITION. DO NOT STICK DOWELS INTO FOOTINGS AFTER CONCRETE IS PLACED.
10. POSITION DOWELS FOR VERTICAL WALL REINFORCEMENT IN COLUMN FOOTINGS AND WALL FOOTING STEPS WITH 6 INCHES MAXIMUM BOTTOM COVER.
11. PROVIDE TENSION LAP SPLICES, AS INDICATED IN THE LAP SPLICE SCHEDULE WITH DETAIL B/S10, FOR HORIZONTAL WALL REINFORCEMENT AND LONGITUDINAL GRADE BEAM REINFORCEMENT, UNLESS OTHERWISE INDICATED.
12. FIELD BENDING OF REINFORCING STEEL IS PROHIBITED.
13. SEE SECTION 03200, CONCRETE REINFORCEMENT, OF THE PROJECT MANUAL, FOR SHOP DRAWING PREPARATION REQUIREMENTS.
14. EPOXY-COATED REINFORCING STEEL

    PROVIDE EPOXY-COATED REINFORCING STEEL FOR THE FOLLOWING:

    A. POST-TENSIONED SLABS AND NON-POST-TENSIONED SLABS. ALL REINFORCEMENT, INCLUDING SUPPORT BARS AND BACKUP BARS.

    B. DOWNTURNED POST-TENSIONED AND DOWNTURNED NON-POST-TENSIONED BEAMS: BEAM TOP REINFORCEMENT AND STIRRUPS.

    C. UPTURNED POST-TENSIONED AND UPTURNED NON-POST-TENSIONED BEAMS: BEAM BOTTOM REINFORCEMENT AND STIRRUPS.

    D. COLUMNS: TIES WITHIN BEAM DEPTH AT PERIMETER COLUMNS.

DRILLED-IN DOWELS

1. PROVIDE DRILLED-IN DOWELS WITH SIZE, LENGTH, EMBEDMENT AND SPACING AS INDICATED ON THE DRAWINGS.
2. ANCHOR DRILLED-IN DOWELS TO EXISTING CONCRETE WITH AN ADHESIVE ANCHOR SYSTEM. SEE SECTION 03300, CAST-IN-PLACE CONCRETE, PARAGRAPH 2.20, OF THE PROJECT MANUAL, FOR PRODUCT STANDARDS. SELECT PRODUCT FROM SPECIFICATIONS UNLESS SECTIONS/DETAILS INDICATE A SPECIFIC PRODUCT.
3. DRILLED HOLE SIZE AND INSTALLATION PROCEDURE SHALL BE IN ACCORDANCE WITH THE PRODUCT MANUFACTURER'S INSTRUCTIONS.
4. USE CARBIDE BIT DRILL TO PREVENT DAMAGE TO REINFORCING STEEL. USE JAMES R-METER TO LOCATE AND AVOID REINFORCEMENT.
5. CLEAN DRILLED HOLES BEFORE INSTALLING DOWELS.

CONCRETE

1. THE MIXING, HANDLING, PLACING AND CURING OF CONCRETE SHALL BE IN ACCORDANCE WITH THE ACI "BUILDING CODE REQUIREMENTS FOR STRUCTURAL CONCRETE" (ACI 318-99).
2. PROVIDE 3/4 INCH CHAMFERS ON EXPOSED CORNERS OF CONCRETE EXCEPT THOSE ABUTTING MASONRY.
3. SEE SECTION 03300, CAST-IN-PLACE CONCRETE, OF THE PROJECT MANUAL, FOR CONCRETE MIX PROPORTIONING REQUIREMENTS.
4. SEE SECTION 03100, CONCRETE FORMWORK, OF THE PROJECT MANUAL, FOR FORM REMOVAL AND RESHORING REQUIREMENTS.
5. SEE SECTION 03300, CAST-IN-PLACE CONCRETE, ARTICLE 3.10, OF THE PROJECT MANUAL, FOR COLD WEATHER CONCRETING REQUIREMENTS.
6. SEE SECTION 03300, CAST-IN-PLACE CONCRETE, ARTICLE 3.11, OF THE PROJECT MANUAL, FOR COLD WEATHER CONCRETING REQUIREMENTS.
7. FINISH CONCRETE SLABS ON COMPOSITE STEEL FLOOR DECK TO THE TOLERANCE SPECIFIED IN SECTION 03300, CAST-IN-PLACE CONCRETE, PARAGRAPH 3.5A, OF THE PROJECT MANUAL. MAINTAIN AT LEAST THE REQUIRED SLAB THICKNESS AT ALL LOCATIONS, INCREASING THE THICKNESS AS REQUIRED, TO COMPENSATE FOR DECK AND BEAM DEFLECTIONS, AND RESIDUAL BEAM CAMBER.
8. FINISHING OF SLABS: AFTER SCREEDING, BULL FLOATING AND FLOATING OPERATIONS HAVE BEEN COMPLETED, APPLY FINAL FINISH AS INDICATED BELOW, AND AS DESCRIBED IN SECTION 03300, CAST-IN-PLACE CONCRETE, PARAGRAPH 3.5E, OF THE PROJECT MANUAL.
   a. PARKING SURFACES ..... ROUGH SWIRL FINISH
   b. PARKING SURFACES (IF MICROSILICA CONCRETE ALTERNATE IS PROVIDED) ..... BROOM FINISH
   c. STAIR/ELEVATOR TOWERS FLOOR SLABS ..... HARD TROWEL FINISH
   d. SLIP RESISTANT SURFACES (STAIR TREADS AND RAMPS) ..... BROOM FINISH
9. FINISHING OF FORMED SURFACES: FINISH FORMED SURFACES AS INDICATED BELOW, AND AS DESCRIBED IN SECTION 03300, CAST-IN-PLACE CONCRETE, ARTICLE 3.6, OF THE PROJECT MANUAL.
   INTERIOR SURFACES ARE CONSIDERED SURFACES THAT ARE NOT EXPOSED TO PUBLIC VIEW.
   (NOTE: PUBLIC VIEW REFERS TO VIEW FROM OUTSIDE OF THE GARAGE)
   a. SIDES OF FOOTINGS ..... NONE
   b. WALLS NOT EXPOSED TO PUBLIC VIEW ..... ROUGH FORM FINISH
   c. VERTICAL SURFACES EXPOSED TO PUBLIC VIEW EXTERIOR FACE OF EXPOSED CONCRETE ..... SACK RUBBED FINISH
   d. COLUMNS & PIERS ..... ROUGH FORM FINISH
   e. BOTTOMS & SIDES OF BEAMS ..... SMOOTH FORM FINISH (SEE NOTE 10)
   f. BOTTOMS OF SLABS ..... SMOOTH FORM FINISH (SEE NOTE 10)
   g. OTHER SURFACES NOT EXPOSED TO PUBLIC VIEW ..... ROUGH FORM FINISH
   h. OTHER SURFACES EXPOSED TO PUBLIC VIEW ..... SACK RUBBED FINISH
   i. SURFACES SPECIFICALLY INDICATED ON THE ARCHITECTURAL DRAWINGS TO BE " SACK RUBBED FINISH " ..... SACK RUBBED FINISH
10. FRAMING OF (1) BOTTOM OF SLABS AND (2) BOTTOM AND SIDES OF BEAMS SHALL MEET ALL REQUIREMENTS OF SECTION 03100 , CONCRETE FORMWORK , ARTICLE 1.2 , (QUALITY ASSURANCE) AND ARTICLE 2.1 , (FORM MATERIALS AND ACCESSORIES) OF THE PROJECT MANUAL .
11. CURING OF SLABS: CURE SLABS WITH CURING COMPOUNDS OR MOISTURE RETENTION COVERS AS DESCRIBED IN SECTION 03300, CAST-IN-PLACE CONCRETE, ARTICLE 3.8 OF THE PROJECT MANUAL.
12. ARCHITECTURAL REVEALS: SEE ARCHITECTURAL DRAWINGS FOR LOCATIONS AND DETAILS OF REVEALS (1" MAXIMUM DEPTH) IN EXPOSED CONCRETE WALLS.

POST-TENSIONED CONCRETE

1. THE REQUIRED POST-TENSIONING FORCES SHOWN ON THE DRAWINGS AND POST-TENSIONED CONCRETE BEAM SCHEDULE ARE EFFECTIVE FORCES AND INCLUDE ALL POST-TENSIONING LOSSES. THE NUMBER OF TENDONS SHALL BE DETERMINED BY THE POST-TENSIONING SUPPLIER BASED ON THESE EFFECTIVE FORCES AND SHALL BE SUBMITTED WITH THE SHOP DRAWINGS, ALONG WITH STRESS LOSS CALCULATIONS.
2. THE MAXIMUM TENDON JACKING FORCE SHALL NOT EXCEED 80 PERCENT OF THE ULTIMATE STRENGTH OF THE STRAND.
3. THE STRESSING OF TENDONS MAY COMMENCE WHEN THE CONCRETE HAS OBTAINED A COMPRESSIVE STRENGTH OF 3000 PSI AS INDICATED BY STRENGTH TESTS ON THE FIELD-CURED CYLINDERS.
4. STRESSING OF TENDONS SHALL BE DONE WITHIN 48 HOURS AFTER PLACEMENT OF CONCRETE FOR MICROSILICA CONCRETE, AND WITHIN 72 HOURS AFTER PLACEMENT OF CONCRETE FOR NON-MICROSILICA CONCRETE.
5. THE POST-TENSIONING SYSTEM SHALL BE AN UNBONDED MONOSTRAND SYSTEM USING 1/2" DIAMETER LOW RELAXATION STRAND CONFORMING TO ASTM A416, GRADE 270.
6. CUT EXCESS TENDON LENGTH AND GROUT ANCHORAGE RECESSES AFTER STRESSING RECORDS HAVE BEEN APPROVED BY THE ARCHITECT/ENGINEER.
7. ADDITIONAL TENDONS (THAT ARE NOT FULL LENGTH) MUST BE STRESSED AT THE EDGE OF SLAB OR EXTENDED TO THE NEAREST CONSTRUCTION JOINT (WITH CENTER OF GRAVITY OF STRAND AT SLAB MID-DEPTH), AND STRESSED AT THAT JOINT, BRINGING TENDONS UP THRU THE TOP OF THE SLAB SLAB FOR ACCESSIBILITY FOR STRESSING IS NOT ALLOWED.
8. AT OPENINGS GREATER THAN 12" SQUARE, PROVIDE 2-#5 x OPENING DIMENSION + 4'-0" TOP AND BOTTOM ON ALL SIDES.
9. PROVIDE 2-#4 BACK-UP BARS FOR EACH HORIZONTAL ROW OF TENDON ANCHORS IN POST-TENSIONED BEAMS AND SLABS AT STRESSING ENDS AND AT DEAD ENDS.
10. PROVIDE HIGH CHAIRS WITH SUPPORT BARS AND SLAB BOLSTERS FOR THE SUPPORT OF THE SLAB MAIN TENDONS. PLACE TEMPERATURE TENDONS OVER THE SLAB MAIN TENDONS. DO NOT USE THE TEMPERATURE TENDONS AS THE SUPPORT FOR THE SLAB MAIN TENDONS. DO NOT USE BEAM REINFORCEMENT CAGE TO SUPPORT SLAB TENDONS.
11. FOR POST-TENSIONING, STRESS SLAB TENDONS PARALLEL TO BEAMS FIRST, THEN SLAB TENDONS PERPENDICULAR TO BEAMS, AND THEN STRESS BEAM TENDONS.
12. LOCATE CONSTRUCTION JOINTS IN POST-TENSIONED SLABS AT THE QUARTER POINTS OF THE SLAB SPAN (WHERE THE POST-TENSIONING TENDONS ARE AT MID-DEPTH OF SLAB). CONSTRUCTION JOINTS THROUGH POST-TENSIONED BEAMS ARE NOT ALLOWED.
13. POUR STRIPS ARE NOT ALLOWED.
14. DRILLED-IN ANCHORS INSTALLED IN POST-TENSIONED SLABS SHALL HAVE 1" MAXIMUM PENETRATION AS FOLLOWS:
    a. BOTTOM OF SLAB: ADJACENT TO BEAMS, WITHIN OUTER QUARTER OF SLAB SPAN ONLY.
    b. TOP OF SLAB: WITHIN MIDDLE THIRD OF SLAB SPAN ONLY.

STRUCTURAL STEEL

1. STRUCTURAL STEEL CONSTRUCTION SHALL CONFORM TO THE AMERICAN INSTITUTE OF STEEL CONSTRUCTION "SPECIFICATION FOR STRUCTURAL STEEL BUILDINGS, ALLOWABLE STRESS DESIGN AND PLASTIC DESIGN".
2. SHOP CONNECTIONS, UNLESS OTHERWISE SHOWN, MAY BE EITHER BOLTED OR WELDED. FIELD CONNECTIONS SHALL BE BOLTED UNLESS OTHERWISE DETAILED ON THE DRAWINGS.
3. BOLTED CONNECTIONS SHALL BE BEARING-TYPE CONNECTIONS USING 3/4 INCH DIAMETER ASTM A325 BOLTS WITH STANDARD 13/16 INCH DIAMETER HOLES, UNLESS OTHERWISE NOTED OR DETAILED ON THE DRAWINGS, OR APPROVED BY THE ARCHITECT/ENGINEER.
4. SLIP CRITICAL BOLTS (S.C.) SHALL BE USED WHERE INDICATED ON THE DRAWINGS. SLIP CRITICAL BOLTS MUST BE USED IN THE FOLLOWING CONNECTIONS:
   a. WIND BRACING CONNECTIONS.
   b. CONNECTIONS WHERE BOLTS ARE SUBJECT TO TENSION LOADS INCLUDING MOMENT CONNECTIONS AND DRAG STRUTS INDICATED ON THE DRAWINGS.
   c. FASTENERS IN OVERSIZED HOLES.
   d. FASTENERS IN SHORT OR LONG SLOTTED HOLES WHEN THE DIRECTION OF THE LOAD IS PARALLEL TO THE SLOT.
5. TENSION BOLTS IN ACCORDANCE WITH TABLE 4 OF THE "SPECIFICATION FOR STRUCTURAL JOINTS USING ASTM A325 OR A490 BOLTS".
6. FLOOR AND ROOF FRAMING:

   CONNECTIONS NOT DETAILED ON THE DRAWINGS SHALL BE DESIGNED BY THE STEEL FABRICATOR IN ACCORDANCE WITH THE AISC "MANUAL OF STEEL CONSTRUCTION". BEAM END CONNECTIONS SHALL BE DESIGNED FOR THE VERTICAL SHEAR REACTIONS INDICATED AT THE BEAM ENDS ON THE FRAMING PLANS. WHERE SUCH REACTIONS HAVE NOT BEEN INDICATED, FOR NON-COMPOSITE BEAMS, THE CONNECTIONS SHALL BE DESIGNED FOR ONE-HALF THE BEAM LOAD CAPACITY AS GIVEN IN THE AISC "ALLOWABLE LOADS ON BEAMS" TABLES.

   FOR SKEWED CONNECTIONS SEE DETAIL C/S14D. PLATE CONNECTIONS SHALL BE DESIGNED TO CONFORM TO APPENDIX C OF VOLUME II OF THE A.I.S.C. MANUAL OF STEEL CONSTRUCTION.
7. FABRICATE SIMPLE SPAN BEAMS WITHOUT SPECIFIED CAMBERS SO THAT, AFTER ERECTION, ANY MINOR CAMBER DUE TO ROLLING OR SHOP ASSEMBLY SHALL BE UPWARD.
8. SUB-BASE (LEVELING) PLATES WILL NOT BE ALLOWED UNDER COLUMN BASE PLATES.
9. BURNING OF HOLES IN STRUCTURAL STEEL SHALL NOT BE ALLOWED WITHOUT APPROVAL OF THE ARCHITECT/ENGINEER.
10. SEE SECTION 05100, STRUCTURAL STEEL, ARTICLE 3.4 OF THE PROJECT MANUAL, FOR STRUCTURAL STEEL TESTING REQUIREMENTS.
11. SEE SECTION 05100, STRUCTURAL STEEL, ARTICLE 2.3 OF THE PROJECT MANUAL, FOR STRUCTURAL STEEL SHOP PAINTING REQUIREMENTS.
12. PROVIDE SHORT SLOTTED HORIZONTAL HOLES IN SHEAR CONNECTION PLATES OF RIGID FRAME MOMENT CONNECTIONS TO MINIMIZE WELD SHRINKAGE STRESSES.
13. SEQUENCE THE WELDING OF CONNECTION PLATES AND STIFFENER PLATES TO MINIMIZE WELD SHRINKAGE STRESSES.
14. BACKUP BARS REQUIRED FOR WELDED CONNECTIONS SHALL BE CONTINUOUS.
15. USE LOW HYDROGEN ELECTRODES WHEN WELDING ASTM A572, GRADE 50 STEEL. (WELDING RODS : SEE SECTION 05100, STRUCTURAL STEEL, OF THE PROJECT MANUAL.)
16. FOR BEAMS FRAMING OVER THE TOP OF A COLUMN, PROVIDE 1/4 INCH STIFFENER PLATES EACH SIDE OF THE BEAM WEB UNLESS DETAILED OTHERWISE.
17. CAMBER BEAMS, AS REQUIRED, TO PROVIDE THE CAMBERS INDICATED ON THE FRAMING PLANS, AS MEASURED AFTER ERECTION, COMPENSATING FOR ANY RELEASE OF STRESS INDUCED DURING THE CAMBERING OPERATION.

STEEL DECK

1. STEEL DECK CONSTRUCTION SHALL CONFORM TO THE STEEL DECK INSTITUTE'S "DESIGN MANUAL FOR COMPOSITE DECKS, FORM DECKS AND ROOF DECKS".
2. DECK SHALL BE THREE OR MORE SPANS CONTINUOUS WHERE POSSIBLE.
3. WELD 1½", WIDE RIB STEEL ROOF DECK TO EACH SUPPORT AT NOT MORE THAN 12 INCH CENTERS AND IN STRICT COMPLIANCE WITH THE DECK MANUFACTURER'S INSTRUCTIONS AND THE SHOP DRAWINGS. WELDS SHALL BE AT LEAST 5/8 INCH DIAMETER OR EQUIVALENT. CONNECT SIDELAPS AT ONE-THIRD POINTS OF SPAN WITH SELF TAPPING SCREWS NOT SMALLER THAN #10.
4. HUNG LOADS:
   a. ROOF DECK - SUSPENDED CEILINGS, LIGHT FIXTURES, DUCTS, ETC. ARE NOT TO BE SUPPORTED BY THE STEEL ROOF DECK.

COORDINATION WITH OTHER TRADES

1. THE CONTRACTOR SHALL COORDINATE AND CHECK ALL DIMENSIONS RELATING TO ARCHITECTURAL FINISHES, MECHANICAL OPENINGS, EQUIPMENT, ETC. NOTIFY THE ARCHITECT/ENGINEER OF ANY DISCREPANCIES BEFORE PROCEEDING WITH WORK IN THE AREA UNDER QUESTION.
2. THERE SHALL BE NO VERTICAL OR HORIZONTAL SLEEVES SET, OR HOLES CUT OR DRILLED IN ANY BEAM OR COLUMN UNLESS IT IS SHOWN ON THE STRUCTURAL DRAWINGS OR APPROVED BY THE ARCHITECT/ENGINEER.
3. MECHANICAL AND ELECTRICAL OPENINGS THROUGH CONCRETE SLABS AND WALLS LARGER THAN 8 INCHES IN DIAMETER, NOT SHOWN ON THE STRUCTURAL DRAWINGS, MUST BE APPROVED BY THE ARCHITECT/ENGINEER. OPENINGS 8 INCHES IN DIAMETER OR LESS SHALL HAVE AT LEAST 1'-0" CLEAR BETWEEN OPENINGS UNLESS APPROVED BY THE ARCHITECT/ENGINEER.
4. VERIFY DIMENSIONS AND LOCATIONS OF MECHANICAL AND ELECTRICAL OPENINGS THROUGH CONCRETE SLABS, SHOWN ON THE STRUCTURAL DRAWINGS, WITH THE MECHANICAL AND ELECTRICAL CONTRACTORS.
5. MECHANICAL AND ELECTRICAL CONDUIT SHALL NOT BE EMBEDDED IN POST-TENSIONED SLABS.
6. COORDINATE LOCATIONS OF FLOOR DRAINS AND SLEEVES THROUGH POST-TENSIONED SLABS, AS INDICATED ON THE STRUCTURAL DRAWINGS, WITH MECHANICAL AND ELECTRICAL CONTRACTORS. MAINTAIN A MINIMUM OF 4" CLEARANCE TO POST-TENSIONING TENDONS AND REINFORCING BARS.
7. CORE DRILLING OF POST-TENSIONED CONCRETE SHALL NOT BE ALLOWED.

EXISTING CONSTRUCTION

1. VERIFY ALL EXISTING DIMENSIONS, ELEVATIONS AND CONDITIONS BEFORE PROCEEDING WITH NEW CONSTRUCTION. NOTIFY THE ARCHITECT/ENGINEER OF ANY DISCREPANCIES BEFORE PROCEEDING WITH WORK IN THE AREA UNDER QUESTION.

DESIGN INFORMATION

GEOTECHNICAL

COLUMN FOOTINGS:
ALLOWABLE NET BEARING PRESSURE, ANBP = 8000 PSF

RETAINING WALL FOOTINGS
ALLOWABLE NET BEARING PRESSURE, ANBP = 8000 PSF

LATERAL EARTH PRESSURE:
ACTIVE COEFFICIENT, EFP 40 PCF
AT-REST COEFFICIENT, EFP 60 PCF
UNIT WEIGHT OF BACKFILL = 130 PCF
COEFFICIENT OF FRICTION AGAINST SLIDING (BETWEEN CONCRETE AND SOIL) = 0.40

CONCRETE

SEE CONCRETE SCHEDULE FOR 28 DAY COMPRESSIVE STRENGTHS.

REINFORCING STEEL

REINFORCING BARS: ..... ASTM A615, GRADE 60

EPOXY-COATED REINFORCING BARS: ..... ASTM A775, GRADE 60

POST-TENSIONING TENDONS: ..... ½" ROUND, LOW RELAXATION STRAND CONFORMING TO ASTM A416, GRADE 270

WELDED WIRE FABRIC: ASTM A185

STRUCTURAL STEEL

STRUCTURAL W-SHAPES ..... ASTM A572, GRADE 50

ANGLES, CHANNELS, PLATES & BARS: ..... ASTM A36

STRUCTURAL TUBING: ..... ASTM A500, GRADE B, Fy = 46 KSI

ANCHOR BOLTS: ..... ASTM A36

CONNECTION BOLTS: ..... ¾" INCH DIAMETER, ASTM A325N UNLESS OTHERWISE DETAILED ON THE DRAWINGS OR APPROVED BY THE ARCHITECT/ENGINEER

MASONRY

f'_m = 2000 psi MINIMUM

MORTAR: TYPE S (EXTERIOR WALLS AND INTERIOR WALLS) PORTLAND CEMENT/ LIME

GROUT: 2500 psi MINIMUM

CONCRETE MASONRY UNITS: ASTM C90-GRADE N, TYPE I, 2800 psi

DESIGN LIVE LOADS

PARKING SURFACES:	FLOOR	ROOF NOTE A
SLABS (UNREDUCED)	50 PSF	85 PSF
BEAMS (REDUCED)	30 PSF	65 PSF
COLUMNS (REDUCED)	30 PSF	65 PSF

NOTE A: ROOF FRAMING SLAB AND BEAMS (FOURTH LEVEL) BOUNDED BY COLUMN LINES 1 & 2 AND 15 & 16 : 120 PSF UNREDUCED LIVE LOAD.

STAIR/ELEVATOR TOWERS: 100 PSF 35 PSF

BUMPER LOAD: 10,000 POUNDS (ULTIMATE) APPLIED AT 1'-6" ABOVE THE PARKING SURFACE OVER ONE FOOT SQUARE (AT ANY POINT ALONG WALL, ACTING OUTWARD)

CONCENTRATED WHEEL LOAD: 2,000 POUNDS ON 20 SQUARE INCHES.

DESIGN WIND LOADS

BASIC WIND SPEED, V ..... 90 MPH
TERRAIN CATEGORY ..... B
IMPORTANCE FACTOR, Iw 1.00
WIND LOAD DESIGN ..... IBC 1609
ASCE 7-98 (SECTION 6)

DESIGN SEISMIC LOADS

SEISMIC USE GROUP I
IMPORTANCE FACTOR, Ie 1.00
SHORT PERIOD RESPONSE ACCELERATION, Ss 0.13g
ONE SECOND PERIOD RESPONSE ACCELERATION, S1 ..... 0.06g
DESIGN SHORT PERIOD RESPONSE ACCELERATION, Sds 0.13g
DESIGN ONE SECOND PERIOD RESPONSE ACCELERATION, Sd1 ..... 0.094g
SITE CLASS ..... D
SEISMIC DESIGN CATEGORY ..... B
EARTHQUAKE LOAD DESIGN ..... IBC CHAPTER 16
RESPONSE MODIFICATION FACTOR, R 3
BASIC SEISMIC FORCE RESISTING SYSTEM
ORDINARY REINFORCED CONCRETE MOMENT FRAMES
DESIGN BASE SHEAR

CONCRETE SCHEDULE

CLASS	28 DAY COMPRESSIVE STRENGTH	AIR CONTENT	CONCRETE PLACEMENT	REMARKS
A	3000 PSI	OPTIONAL	FOOTINGS	WATER REDUCING ADMIXTURE REQUIRED
B	4000 PSI	6± 1%	PIERS, WALLS, BUMPER WALLS	HIGH RANGE WATER REDUCING ADMIXTURE REQUIRED
C	4000 PSI	6± 1%	SLABS ON GRADE	HIGH RANGE WATER REDUCING ADMIXTURE & SYNTHETIC FIBERS REQUIRED
D	5000 PSI	6± 1%	POST-TENSIONED BEAMS AND SLABS, AND NON POST-TENSIONED BEAMS AND SLABS. MAY SUBSTITUTE FOR CLASS B.	HIGH RANGE WATER REDUCING ADMIXTURE REQUIRED
E	6000 PSI	6± 1%	4TH FLOOR BEAMS AND SLABS	HIGH RANGE WATER REDUCING ADMIXTURE REQUIRED
F (SEE ALTERNATE NO. 2)	5000 PSI	6± 1%	POST-TENSIONED BEAMS AND SLABS	CORROSION INHIBITOR ADMIXTURE AND HIGH RANGE WATER REDUCING ADMIXTURE REQUIRED
G	6000 PSI	5± 1%	COLUMNS	HIGH RANGE WATER REDUCING ADMIXTURE REQUIRED
H (SEE ALTERNATE NO. 2)	6000 PSI	6± 1%	4th FLOOR POST-TENSIONED BEAMS AND SLABS	CORROSION INHIBITOR ADMIXTURE AND HIGH RANGE WATER REDUCING ADMIXTURE REQUIRED

NOTES:

1. SEE SECTION 03300, CAST-IN-PLACE CONCRETE, OF THE PROJECT MANUAL FOR CONCRETE MIX PROPORTIONING AND SUBMITTAL REQUIREMENTS.
2. ANY CONCRETE NOT INDICATED IN THE SCHEDULE SHALL BE CLASS B.

ALTERNATES:

ALTERNATE NO. 1:
(PRECAST ALTERNATE, OPTIONAL)

THE CONTRACTOR SHALL PROVIDE A COMPLETE SYSTEM TO PROVIDE A QUALITY AND DURABILITY EQUAL TO THAT SHOWN FOR THE POST-TENSIONED SYSTEM. ALL DESIGN SHALL BE THE RESPONSIBILITY OF THE CONTRACTOR, INCLUDING ARCHITECTURAL, STRUCTURAL AND MEP DESIGN REQUIRED FOR ANY COMPONENTS THAT CHANGE DUE TO THIS ALTERNATE. ALL REDESIGNED SYSTEMS SHALL BE COMPLETE AND PROVIDE FUNCTIONS AND DURABILITY EQUAL TO THE DESIGN SHOWN AND SPECIFIED. REFER T

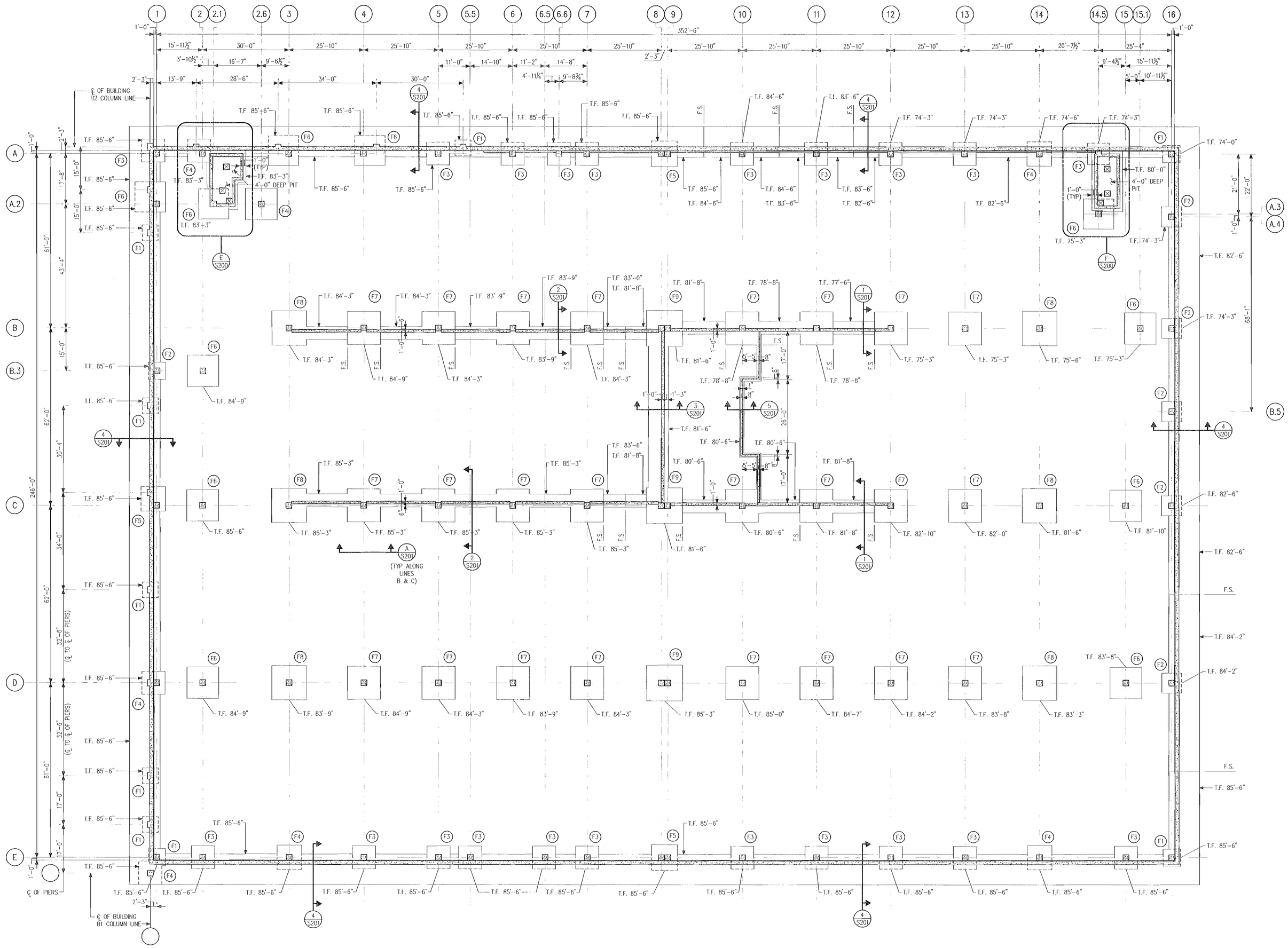

FOUNDATION PLAN
1/16"=1'-0"

NORTH

PLAN NOTES

1. SEE DRAWING SX FOR CONCRETE SCHEDULE AND GENERAL NOTES PERTAINING TO FOUNDATIONS, CONCRETE AND REINFORCING STEEL.
2. (F1) INDICATES FOOTING MARK. SEE DRAWING SX FOR FOOTING SCHEDULE, NOTES AND DETAILS. ELEVATIONS ADJACENT TO FOOTINGS, NOTED T.F. AND B.F., INDICATE TOP OF FOOTING AND BOTTOM OF FOOTING ELEVATIONS RESPECTIVELY.
   REFERENCE ELEVATION: 100'-0" = 743'-0" U.S.G.S.
3. SEE DETAIL D/S200 (TYPICAL COLUMN FOOTING – WALL FOOTING INTERSECTION) FOR TWO ACCEPTABLE METHODS FOR PLACING COLUMN AND WALL FOOTINGS.
4. "F.S." DENOTES FOOTING STEP. SEE DETAIL D/S200 (TYPICAL WALL FOOTING STEPS).
5. SEE DRAWING S300 FOR CONCRETE COLUMN SCHEDULE, NOTES AND DETAILS.
6. SEE DRAWING SX FOR CONCRETE PIER SCHEDULE, NOTES AND DETAILS.
7. SEE DRAWING S202 FOR TYPICAL DETAILS FOR CONCRETE WALL CONSTRUCTION.
8. "W.C.J." DENOTES VERTICAL WALL CONTROL JOINT. SEE DETAIL N/S202 (TYPICAL VERTICAL WALL CONTROL JOINT). EXTEND CONTROL JOINT FROM TOP OF FOOTING TO TOP OF WALL UNLESS INDICATED OTHERWISE.

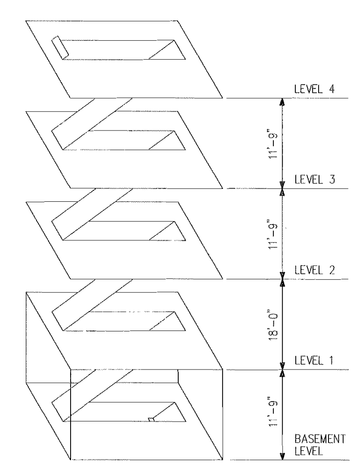

ISOMETRIC

FINK ROBERTS & PETRIE INC
Consulting Engineers
4040 Vincennes Circle, Suite 300
Indianapolis, Indiana 46268

Eddy Street Commons
Phase II
Parking Garage
Project Number 108-004

Owner
City of South Bend, Indiana

Construction Manager
Kite Realty Group
30 South Meridian Street, Suite 1100
Indianapolis, Indiana 46204
317-577-5600

Structural Engineer
Fink, Roberts & Petrie, Inc.
4040 Vincennes Circle, Suite 300
Indianapolis, Indiana 46268
317-872-8400

Architect
Looney Ricks Kiss
175 Toyota Plaza, Suite 600
Memphis, Tennessee 38103
901-521-1440

Mechanical, Electrical & Plumbing Engineer
Circle Design Group
5510 South East Street, Suite F
Indianapolis, Indiana 46227
317-781-0200

Parking Consultant
Walker Parking Consultants
6009 East 75th Street, Suite 210
Indianapolis, Indiana 46250
317-842-6890

Civil Engineer/Landscape Architect
The Troyer Group
550 Union Street
Mishawaka, Indiana 46554
574-259-9976

100% Construction Documents
January 23, 2008

REVISION DATE | REVISION DESCRIPTION

CERTIFIED BY

DESIGN DATE	DESIGN PROJECT NO	DESIGN DRAWN BY	CHECKED BY	
01/23/08	07097	SVC	MP	

SHEET TITLE
FOUNDATION PLAN

SHEET NO.
S100

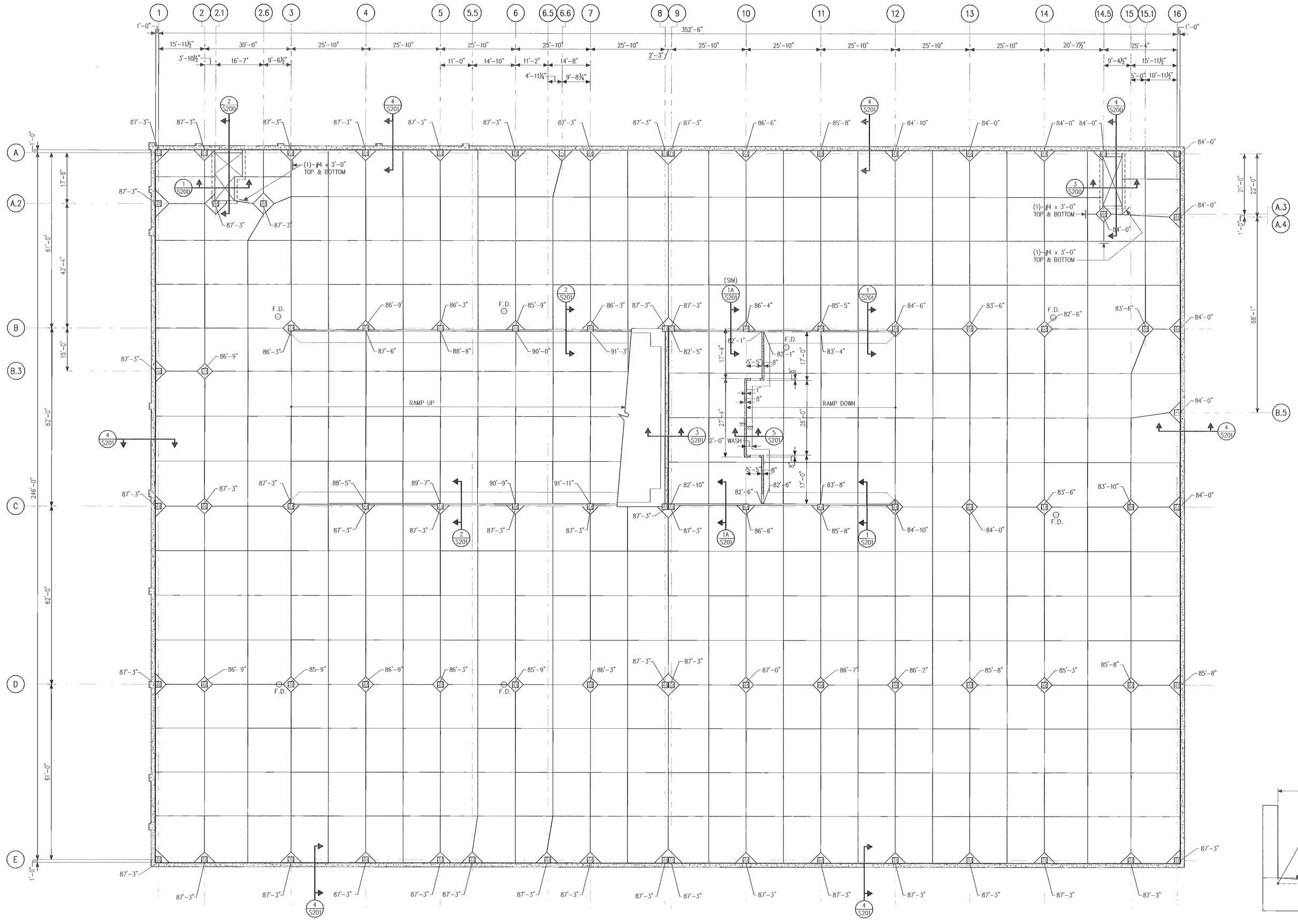

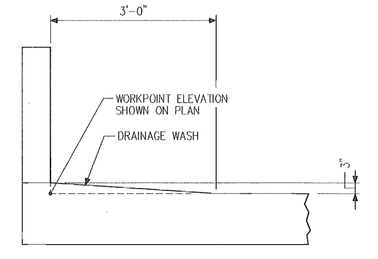

ELEVATIONS AT DRAINAGE "WASH"
NO SCALE

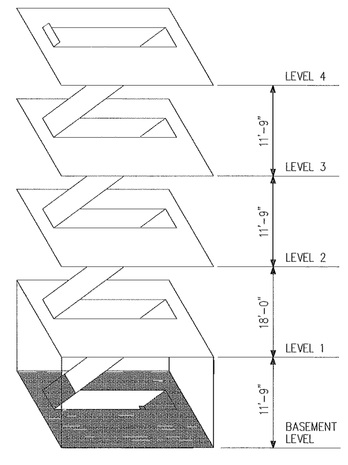

ISOMETRIC

BASEMENT FRAMING PLAN
1/16"=1'-0"

NORTH

PLAN NOTES

1. SEE DRAWING S002 FOR CONCRETE SCHEDULE AND GENERAL NOTES PERTAINING TO FOUNDATIONS, CONCRETE, REINFORCING STEEL AND STRUCTURAL STEEL.
2. SEE DRAWING S300 FOR CONCRETE COLUMN SCHEDULE, NOTES AND DETAILS.
3. SEE DRAWING SX FOR CONCRETE PIER SCHEDULE, NOTES AND DETAILS.
4. SEE DRAWING SX FOR STEEL COLUMN SCHEDULE, NOTES AND DETAILS.
5. SEE DRAWING S202 FOR TYPICAL DETAILS FOR CONCRETE WALL CONSTRUCTION.
6. "W.C.J." DENOTES VERTICAL WALL CONTROL JOINT. SEE DETAIL N/S202 (TYPICAL VERTICAL WALL CONTROL JOINT). EXTEND CONTROL JOINT FROM TOP OF FOOTING TO TOP OF WALL UNLESS INDICATED OTHERWISE.
7. "T.W. XXX'-X" INDICATES TOP OF WALL ELEVATION.
8. "L.E. XXX'-X" INDICATES CONCRETE LEDGE ELEVATION.
9. 87'-3" INDICATES TOP OF SLAB SPOT ELEVATION. REFERENCE ELEVATION: 100'-0" = 743'-0" U.S.G.S.
   100'-0" INDICATES CONSTANT TOP OF SLAB ELEVATION ALONG A LINE.
10. AT LOCATIONS OF DRAINAGE "WASH", TWO TOP OF SLAB SPOT ELEVATIONS ARE INDICATED. SEE DETAIL A/S101 (ELEVATIONS AT DRAINAGE "WASH").
11. SLAB ON GRADE: 5" THICK, CLASS C CONCRETE UNLESS INDICATED OTHERWISE. PLACE ON 6" COMPACTED (95 PERCENT MODIFIED MAXIMUM DRY DENSITY) FREE DRAINING GRANULAR MATERIAL. SEE DETAIL A/S202 (TYPICAL SLAB ON GRADE CONSTRUCTION) AND DETAIL B/S202 (TYPICAL SLAB ON GRADE CONSTRUCTION JOINT).
12. "C.J." DENOTES TOOLED CONTROL JOINT IN SLAB ON GRADE. SEE DETAIL C/S202 (TYPICAL SLAB ON GRADE CONTROL JOINT).
13. 2 INDICATES COLUMN ISOLATION JOINT. SEE DETAIL D/S202 (TYPICAL COLUMN ISOLATION JOINT).
14. PROVIDE THICKENED SLABS UNDER MASONRY WALLS NOT SUPPORTED BY A FOOTING. SEE DETAIL E/S202 (TYPICAL THICKENED SLAB UNDER MASONRY WALL). SEE ARCHITECTURAL DRAWINGS FOR WALL LOCATIONS.
15. PROVIDE 1'-4" WIDE SECTION OF THICKENED SLAB UNDER METAL STAIR LANDINGS TO ACCOMMODATE BEARING AND ANCHORAGE OF STAIR STRINGERS. SEE ARCHITECTURAL DRAWINGS FOR LOCATIONS. SEE DETAIL E/S202 FOR THICKENED SLAB REQUIREMENTS.
16. ⊙ REPRESENTS FLOOR DRAIN CAST IN CONCRETE SLAB. SEE DETAIL F/S202 (TYPICAL FLOOR DRAIN). SEE ARCHITECTURAL AND PLUMBING DRAWINGS FOR LOCATIONS OF FLOOR DRAINS NOT SHOWN AND FOR SLAB DRAINAGE REQUIREMENTS AROUND THEM.
17. SEE ARCHITECTURAL DRAWINGS FOR INFORMATION REGARDING LOCATIONS OF STEEL PIPE BOLLARDS. SEE DETAIL G/S202 (STANDARD BOLLARD DETAIL FOR SLAB ON GRADE) FOR ANCHORAGE REQUIRMENTS.
18. PENETRATING CONCRETE DECK SEALER: APPLY TO TOP SURFACE OF SLABS ON GRADE WITHIN PARKING GARAGE IN ACCORDANCE WITH SECTION 07100, DECK WATERPROOFING, OF THE PROJECT MANUAL.

FINK ROBERTS & PETRIE, INC
Consulting Engineers
Indianapolis, Indiana 46228

Eddy Street Commons
Phase II
Parking Garage
Project Number 108-004

Owner
City of South Bend, Indiana

Construction Manager
Kite Realty Group
30 South Meridian Street, Suite 1100
Indianapolis, Indiana 46204
317-577-5600

Structural Engineer
Fink, Roberts & Petrie, Inc.
4040 Vincennes Circle, Suite 300
Indianapolis, Indiana 46268
317-872-8400

Architect
Looney Ricks Kiss
175 Toyota Plaza, Suite 600
Memphis, Tennessee 38103
901-521-1440

Mechanical, Electrical & Plumbing Engineer
Circle Design Group
5510 South East Street, Suite F
Indianapolis, Indiana 46227
317-781-6200

Parking Consultant
Walker Parking Consultants
6602 East 75th Street, Suite 210
Indianapolis, Indiana 46250
317-842-0890

Civil Engineer/Landscape Architect
The Troyer Group
550 Union Street
Mishawaka, Indiana 46554
574-259-9976

100% Construction Documents
January 23, 2008

REVISION DATE | REVISION DESCRIPTION

CERTIFIED BY
JOSEPH M. PETRIE PE10100028 STATE OF INDIANA PROFESSIONAL ENGINEER

DESIGN DATE 01/23/08
DESIGN PROJECT NO. 07097
DESIGN DRAWN BY SVC
DESIGN CHK'D BY JMP

SHEET TITLE
BASEMENT FRAMING PLAN

SHEET NO.
S101

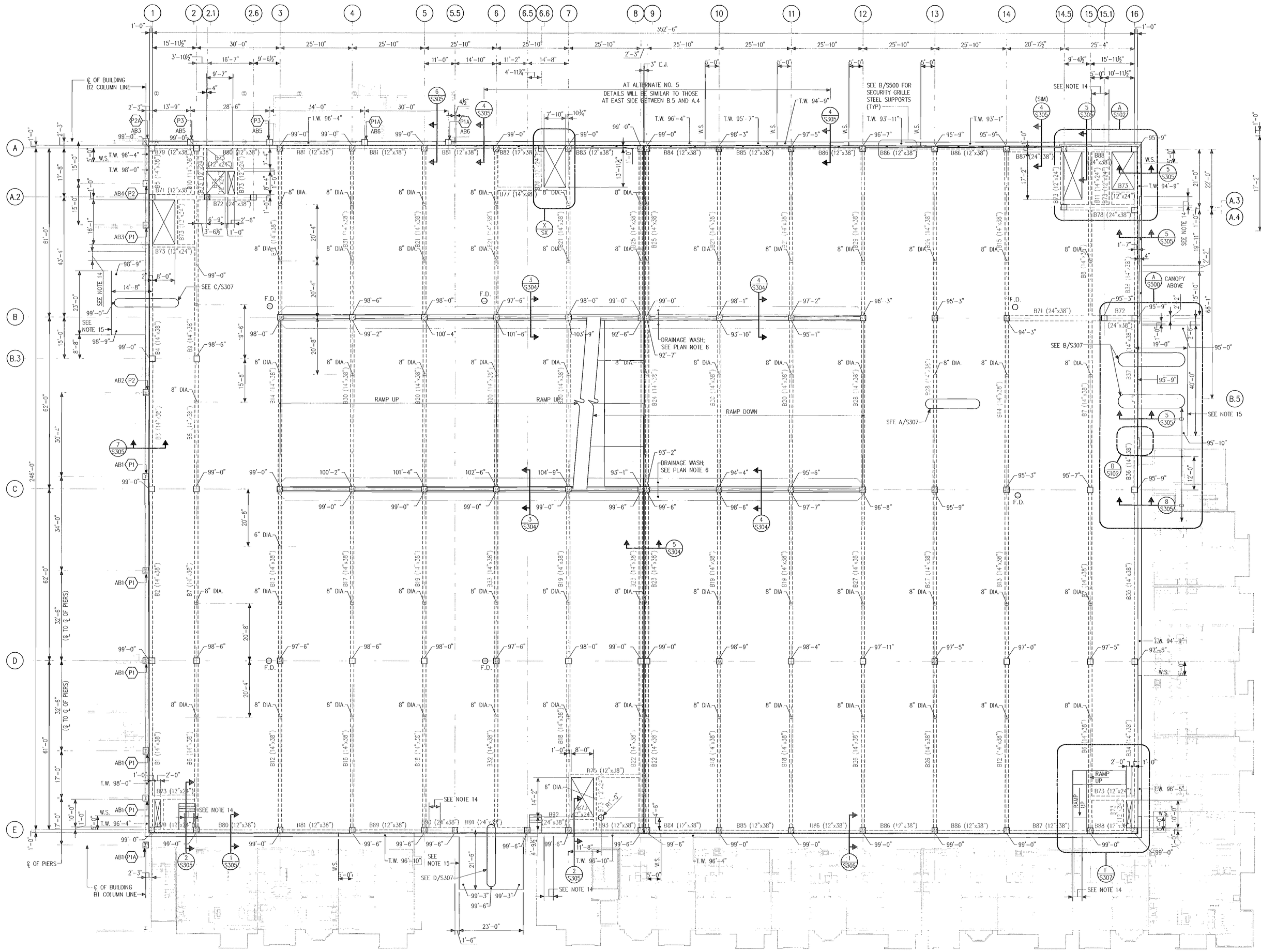

FIRST FLOOR FRAMING PLAN

1/16"=1'-0"

NORTH

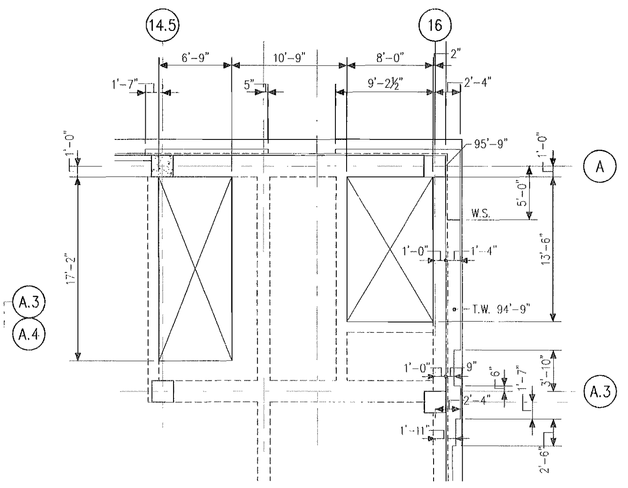

DETAIL A/S102 — 1/8" = 1'-0"

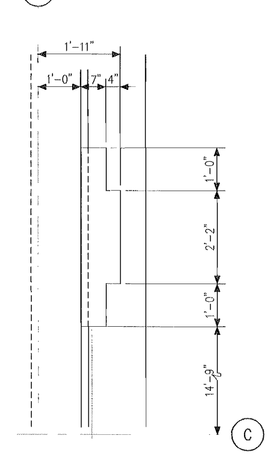

DETAIL B/S102 — 1/2" = 1'-0"

PLAN NOTES

1. SEE DRAWING S002 FOR CONCRETE SCHEDULE AND GENERAL NOTES PERTAINING TO CONCRETE, POST-TENSIONED CONCRETE, REINFORCING STEEL, STRUCTURAL STEEL AND STEEL DECK.
2. SEE DRAWING S300 FOR CONCRETE COLUMN SCHEDULE, NOTES AND DETAILS.
3. 99'-0" INDICATES TOP OF SLAB SPOT ELEVATION. REFERENCE ELEVATION: 100'-0" = 743'-0" U.S.G.S.
4. START OF RAMP: THE RAMP STARTING POINT MAY BE MOVED FROM THE BEAM CENTERLINE (AS SHOWN) TO THE RAMP SIDE OF THE BEAM (CONTRACTOR'S OPTION).
5. "BXX" DENOTES POST-TENSIONED CONCRETE BEAM MARK. SEE S300 SERIES DRAWINGS FOR POST-TENSIONED CONCRETE BEAM SCHEDULE, NOTES AND DETAILS.
6. AT LOCATIONS OF DRAINAGE "WASH", TWO TOP OF SLAB SPOT ELEVATIONS ARE INDICATED. SEE DETAIL A/S102 (ELEVATIONS AT DRAINAGE "WASH").
7. POST-TENSIONED ONE-WAY SLABS: 7" THICK UNLESS DETAILED OTHERWISE. SEE DRAWING S102A FOR SLAB REINFORCEMENT PLAN. SEE DRAWING S303 FOR POST-TENSIONED SLAB DETAILS.
8. REPRESENTS FLOOR DRAIN CAST IN CONCRETE SLAB. SEE DETAIL J/S303 (TYPICAL FLOOR DRAIN). SEE ARCHITECTURAL AND PLUMBING DRAWINGS FOR LOCATIONS OF FLOOR DRAINS NOT SHOWN AND FOR SLAB DRAINAGE REQUIREMENTS AROUND THEM.
9. INDICATES CENTERLINE LOCATION OF SLEEVED OPENINGS THROUGH BEAM. SEE DETAIL H/S302.
10. INDICATES SLEEVED SLAB PENETRATION. VERIFY SIZES AND LOCATIONS OF SLEEVES WITH THE MECHANICAL AND ELECTRICAL CONTRACTORS. COORDINATE THE INSTALLATION OF SLEEVES WITH THE INSTALLATION OF SLAB REINFORCEMENT.
11. SEE ARCHITECTURAL DRAWINGS FOR INFORMATION REGARDING LOCATIONS OF STEEL PIPE BOLLARDS. SEE DETAIL K/S303 (STANDARD BOLLARD DETAIL FOR POST-TENSIONED SLAB) FOR ANCHORAGE REQUIREMENTS.
12. PENETRATING CONCRETE DECK SEALER: APPLY TO TOP SURFACE OF POST-TENSIONED SLABS IN ACCORDANCE WITH SECTION 07100, DECK WATERPROOFING, OF THE PROJECT MANUAL.
13. "WS" INDICATES STEP IN TOP OF WALL ELEVATION.
14. COORDINATE NOTCH REQUIRED IN BEAM FOR EXPANSION JOINT WITH EXPANSION JOINT SUPPLIER AND ARCHITECTURAL DRAWINGS.
15. 165#/SYS HMA SURFACE ON 275#/SYS HMA BASE ON 6" COMPACTED AGGREGATE BASE, NO. 53.

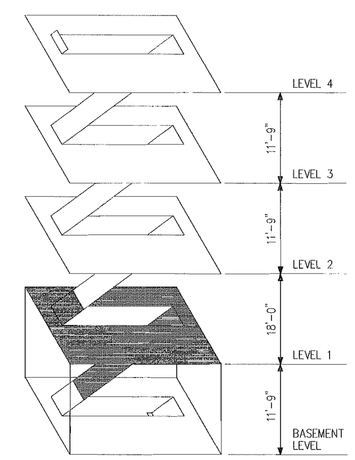

ISOMETRIC

FINK ROBERTS & PETRIE, INC.
Consulting Engineers
4040 Vincennes Circle, Suite 300
Indianapolis, Indiana 46268

Eddy Street Commons
Phase II
Parking Garage
Project Number 108-004

Owner
City of South Bend, Indiana

Construction Manager
Kite Realty Group
30 South Meridian Street, Suite 1100
Indianapolis, Indiana 46204
317-577-5600

Structural Engineer
Fink, Roberts & Petrie, Inc.
4040 Vincennes Circle, Suite 300
Indianapolis, Indiana 46268
317-872-8400

Architect
Looney Ricks Kiss
175 Toyota Plaza, Suite 600
Memphis, Tennessee 38103
901-521-1440

Mechanical, Electrical & Plumbing Engineer
Circle Design Group
5510 South East Street, Suite F
Indianapolis, Indiana 46227
317-781-6200

Parking Consultant
Walker Parking Consultants
6002 East 75th Street, Suite 210
Indianapolis, Indiana 46250
317-842-6890

Civil Engineer/Landscape Architect
The Troyer Group
550 Union Street
Mishawaka, Indiana 46554
574-259-5976

100% Construction Documents
January 23, 2008

REVISION DESCRIPTION

REVISION DATE

CERTIFIED BY

PE10100008 STATE OF INDIANA REGISTERED PROFESSIONAL ENGINEER

DESIGN DATE	DESIGN PROJECT NO.	DESIGN DRAWN BY	DESIGN CHECKED BY		
01/23/08	07097	SVC	JMP		

SHEET TITLE
FIRST FLOOR FRAMING PLAN

SHEET NO.
S102

S102A

SHEET NO.

FIRST FLOOR SLAB REINFORCING PLAN

SHEET TITLE

ISSUE DATE	01/23/08
PROJECT NO.	07097
DRAWN BY	SVC
CHECKED BY	DMP

CERTIFIED BY

REVISION DATE	REVISION DESCRIPTION

100% Construction Documents
January 23, 2008

FINK ROBERTS & PETRIE, INC.
Consulting Engineers
1000 Cassopolis Street, Suite 200
Elkhart, Indiana 46516

Eddy Street Commons
Phase II
Parking Garage
Project Number 108-004

Owner
City of South Bend, Indiana

Construction Manager
Kite Realty Group
30 South Meridian Street, Suite 1100
Indianapolis, Indiana 46204
317-577-5600

Structural Engineer
Fink, Roberts & Petrie, Inc.
1000 Cassopolis Street, Suite 200
Elkhart, Indiana 46516
574-294-5573

Architect
Looney Ricks Kiss
175 Toyota Plaza, Suite 600
Memphis, Tennessee 38103
901-321-1440

Mechanical, Electrical & Plumbing Engineer
Circle Design Group
8510 South East Street, Suite Y
Indianapolis, Indiana 46227
317-781-6300

Plumbing Consultant
Walter Painting Consultants
6602 East 75th Street, Suite 310
Indianapolis, Indiana 46250
317-842-6860

Civil Engineer/Landscape Architect
The Troyer Group
250 Union Street
Valparaiso, Indiana 46384
574-299-9976

ISOMETRIC

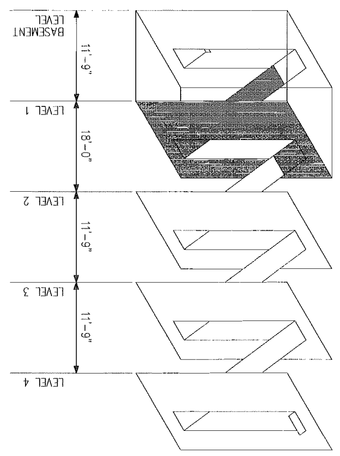

FIRST FLOOR REINFORCING PLAN
1/16"=1'-0"

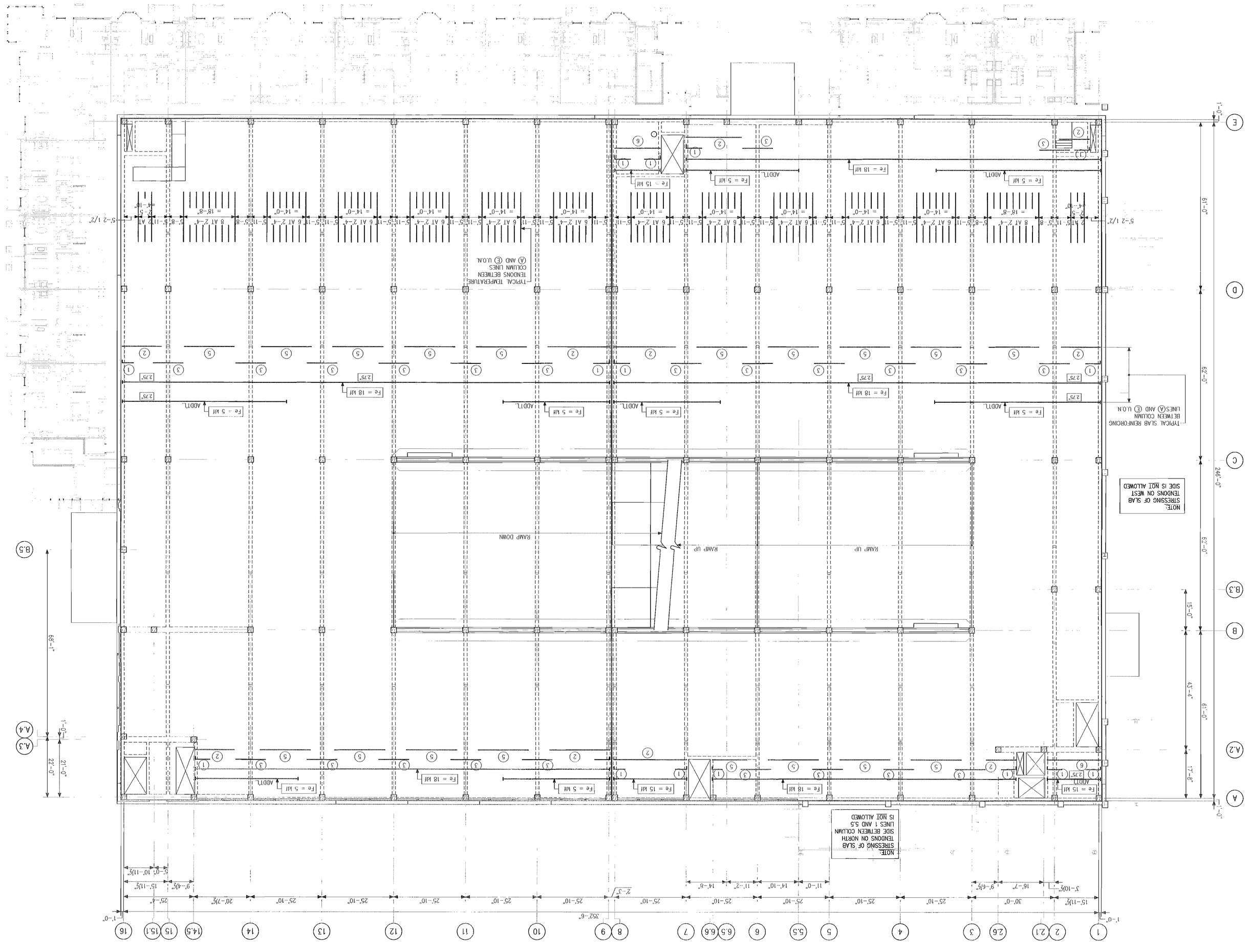

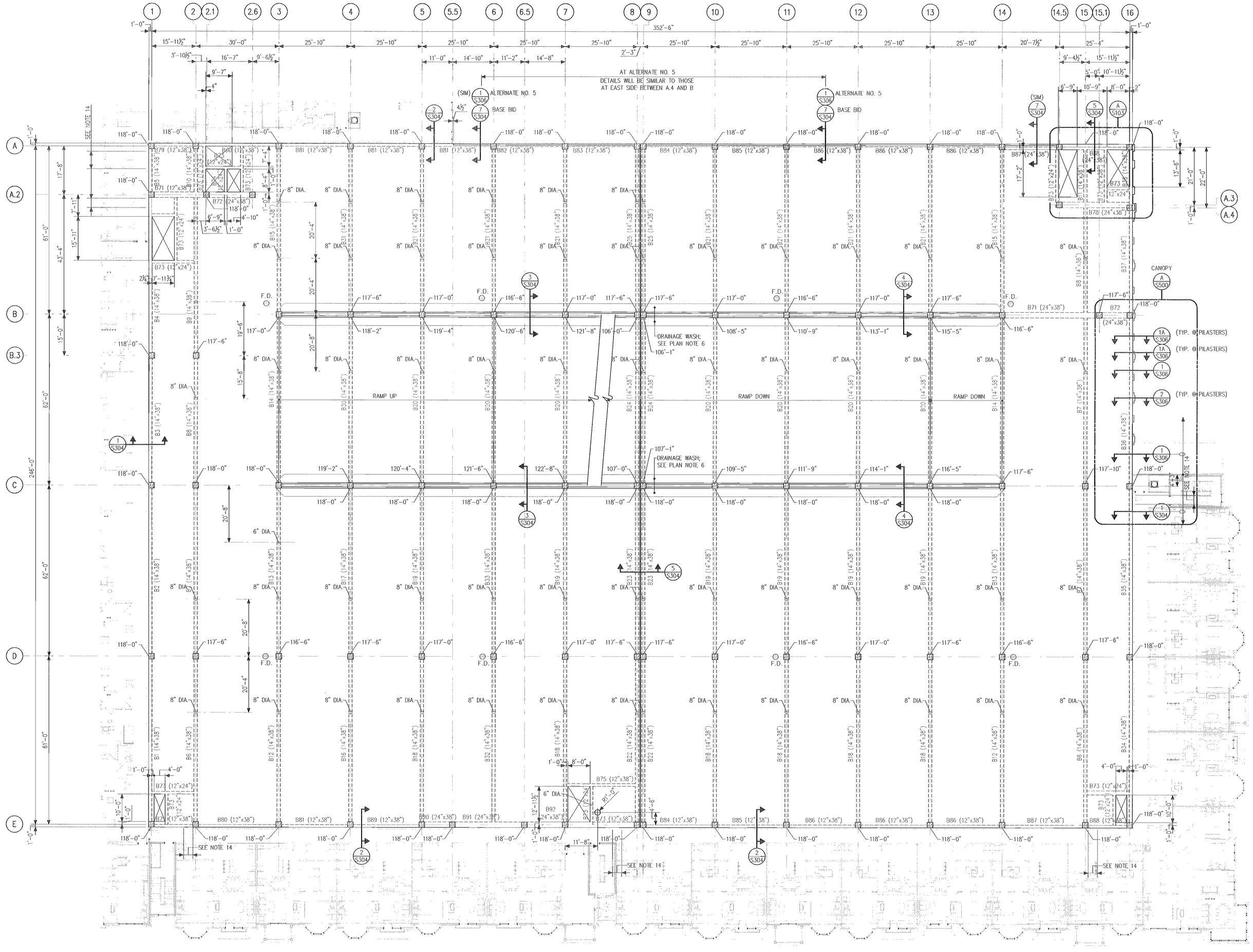

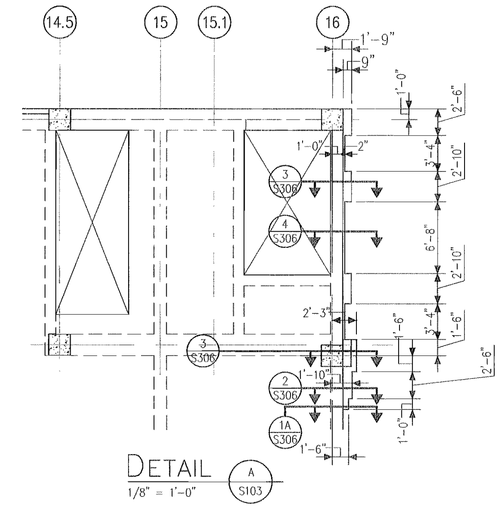

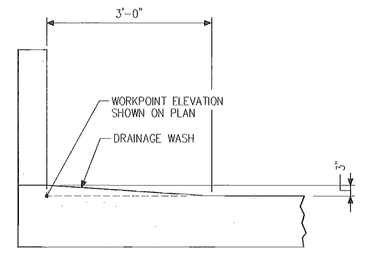

ELEVATIONS AT DRAINAGE "WASH"
NO SCALE

SECOND FLOOR FRAMING PLAN
1/16"=1'-0"

NORTH

PLAN NOTES

1. SEE DRAWING S002 FOR CONCRETE SCHEDULE AND GENERAL NOTES PERTAINING TO CONCRETE, POST-TENSIONED CONCRETE, REINFORCING STEEL, STRUCTURAL STEEL AND STEEL DECK.
2. SEE DRAWING S300 FOR CONCRETE COLUMN SCHEDULE, NOTES AND DETAILS.
3. SEE DRAWING SX FOR STEEL COLUMN SCHEDULE, NOTES AND DETAILS.
4. $\frac{+118'-0"}{}$ INDICATES TOP OF SLAB SPOT ELEVATION. REFERENCE ELEVATION: 100'-0" = 743'-0" U.S.G.S.
5. START OF RAMP: THE RAMP STARTING POINT MAY BE MOVED FROM THE BEAM CENTERLINE (AS SHOWN) TO THE RAMP SIDE OF THE BEAM (CONTRACTOR'S OPTION).
6. AT LOCATIONS OF DRAINAGE "WASH", TWO TOP OF SLAB SPOT ELEVATIONS ARE INDICATED. SEE DETAIL A/S103 (ELEVATIONS AT DRAINAGE "WASH").
7. "bxx" DENOTES POST-TENSIONED CONCRETE BEAM MARK. SEE S300 SERIES DRAWINGS FOR POST-TENSIONED CONCRETE BEAM SCHEDULE, NOTES AND DETAILS.
8. POST-TENSIONED ONE-WAY SLABS: 7" THICK UNLESS DETAILED OTHERWISE. SEE DRAWING S103A FOR SLAB REINFORCEMENT PLAN. SEE DRAWING S303 FOR POST-TENSIONED SLAB DETAILS.
9. ○ REPRESENTS FLOOR DRAIN CAST IN CONCRETE SLAB. SEE DETAIL J/S303 (TYPICAL FLOOR DRAIN). SEE ARCHITECTURAL AND PLUMBING DRAWINGS FOR LOCATIONS OF FLOOR DRAINS NOT SHOWN AND FOR SLAB DRAINAGE REQUIREMENTS AROUND THEM.
10. INDICATES CENTERLINE LOCATION OF SLEEVED OPENINGS THROUGH BEAM. SEE DETAIL H/S302.
11. ● INDICATES SLEEVED SLAB PENETRATION. VERIFY SIZES AND LOCATIONS OF SLEEVES WITH THE MECHANICAL AND ELECTRICAL CONTRACTORS. COORDINATE THE INSTALLATION OF SLEEVES WITH THE INSTALLATION OF SLAB REINFORCEMENT.
12. SEE ARCHITECTURAL DRAWINGS FOR INFORMATION REGARDING LOCATIONS OF STEEL PIPE BOLLARDS. SEE DETAIL K/S303 (STANDARD BOLLARD DETAIL FOR POST-TENSIONED SLAB) FOR ANCHORAGE REQUIREMENTS.
13. PENETRATING CONCRETE DECK SEALER: APPLY TO TOP SURFACE OF POST-TENSIONED SLABS IN ACCORDANCE WITH SECTION 07100, DECK WATERPROOFING, OF THE PROJECT MANUAL.
14. COORDINATE NOTCH REQUIRED IN BEAM FOR EXPANSION JOINT WITH EXPANSION JOINT SUPPLIER AND ARCHITECTURAL DRAWINGS.

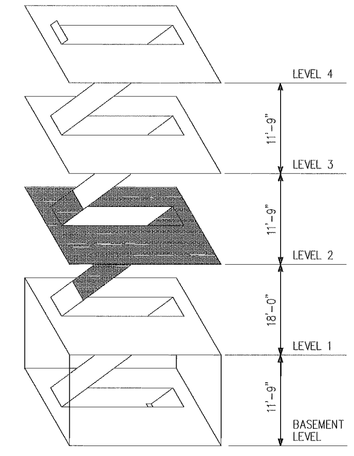

ISOMETRIC

FINK ROBERTS & PETRIE, INC.
Consulting Engineers
4040 Vincennes Circle, Suite 300
Indianapolis, Indiana 46268

Eddy Street Commons
Phase II
Parking Garage
Project Number 108-004

Owner
City of South Bend, Indiana

Construction Manager
Kite Realty Group
30 South Meridian Street, Suite 1100
Indianapolis, Indiana 46204
317-977-3600

Structural Engineer
Fink, Roberts & Petrie, Inc.
4040 Vincennes Circle, Suite 300
Indianapolis, Indiana 46268
317-872-8400

Architect
Looney Ricks Kiss
175 Toyota Plaza, Suite 600
Memphis, Tennessee 38103
901-521-1440

Mechanical, Electrical & Plumbing Engineer
Circle Design Group
5510 South East Street, Suite F
Indianapolis, Indiana 46227
317-781-6200

Parking Consultant
Walker Parking Consultants
6602 East 75th Street, Suite 210
Indianapolis, Indiana 46250
317-842-6890

Civil Engineer/Landscape Architect
The Troyer Group
550 Union Street
Misawaka, Indiana 46554
574-259-9976

100% Construction Documents
January 23, 2008

REVISION DESCRIPTION	REVISION DATE

CERTIFIED BY

ISSUED DATE	ISSUED FOR / REC. NO.	ISSUED DRAWN BY	CHECKED BY
01/23/08	07097	SVC	JMP

SHEET TITLE
SECOND FLOOR FRAMING PLAN

SHEET NO.
S103

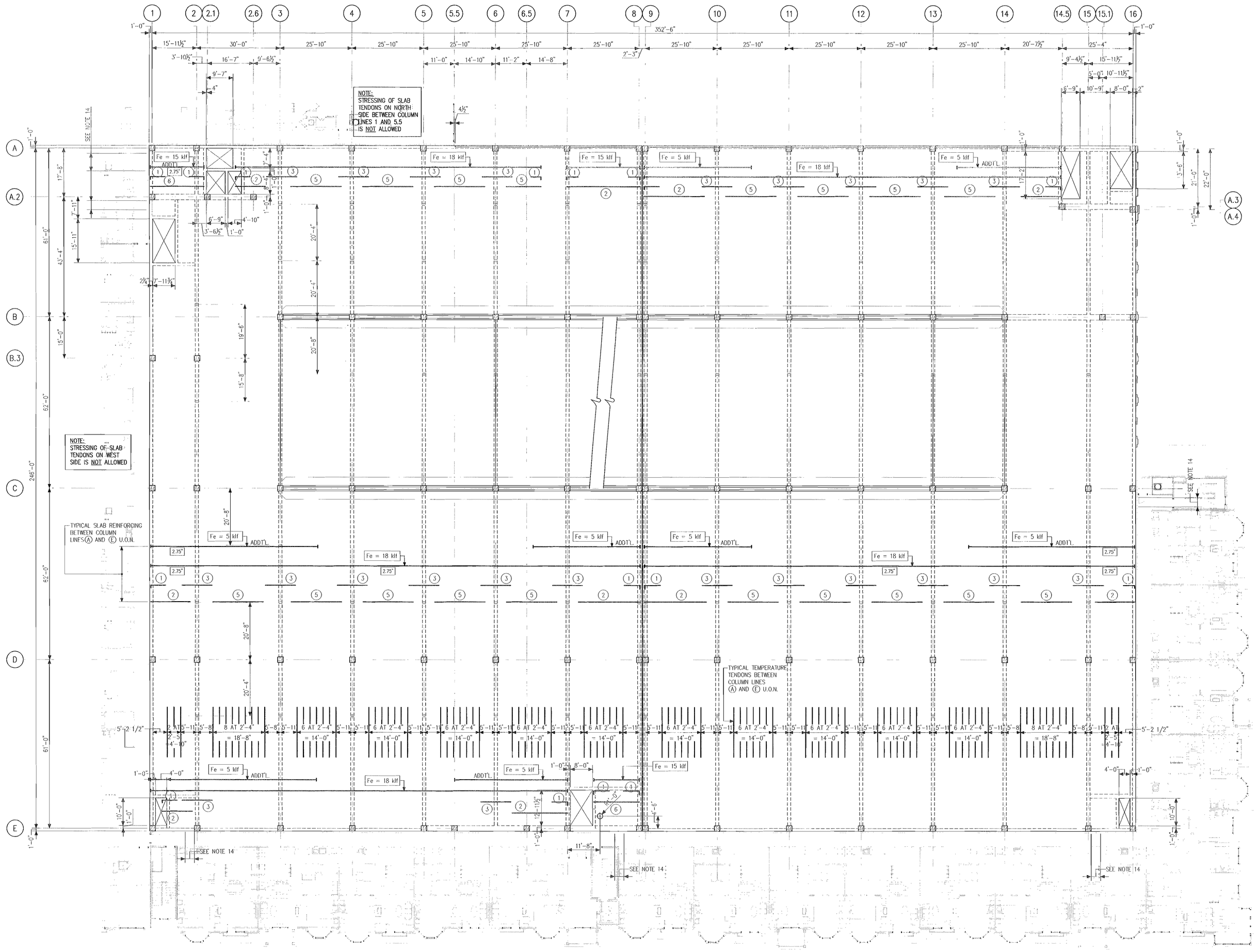

SECOND FLOOR REINFORCING PLAN
1/16"=1'-0"

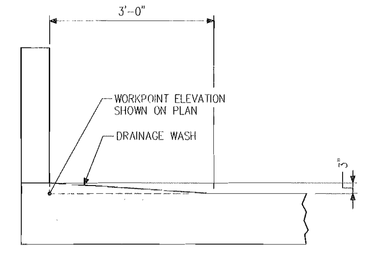

ELEVATIONS AT DRAINAGE "WASH"
NO SCALE

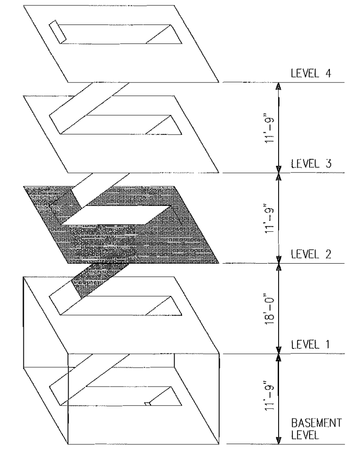

ISOMETRIC

FINK ROBERTS & PETRIE, INC.
Consulting Engineers
4040 Vincennes Circle, Suite 300
Indianapolis, Indiana 46268

Eddy Street Commons
Phase II
Parking Garage
Project Number 108-004

Owner
City of South Bend, Indiana

Construction Manager
Kite Realty Group
30 South Meridian Street, Suite 1100
Indianapolis, Indiana 46204
317-577-5600

Structural Engineer
Fink, Roberts & Petrie, Inc.
4040 Vincennes Circle, Suite 300
Indianapolis, Indiana 46268
317-872-9400

Architect
Looney Ricks Kiss
175 Toyota Plaza, Suite 600
Memphis, Tennessee 38103
901-521-1440

Mechanical, Electrical & Plumbing Engineer
Circle Design Group
5510 South East Street, Suite F
Indianapolis, Indiana 46227
317-781-6200

Parking Consultant
Walker Parking Consultants
6602 East 75th Street, Suite 210
Indianapolis, Indiana 46250
317-842-6890

Civil Engineer/Landscape Architect
The Troyer Group
550 Union Street
Mishawaka, Indiana 46554
574-259-0976

100% Construction Documents
January 23, 2008

REVISION DESCRIPTION | REVISION DATE

CERTIFIED BY

ISSUE DATE	ISSUE PROJECT NO.	ISSUED BY	CHECKED BY		
01/23/08	07097	SVC	JMP		

SHEET TITLE
SECOND FLOOR SLAB REINFORCING PLAN

SHEET NO.
S103A

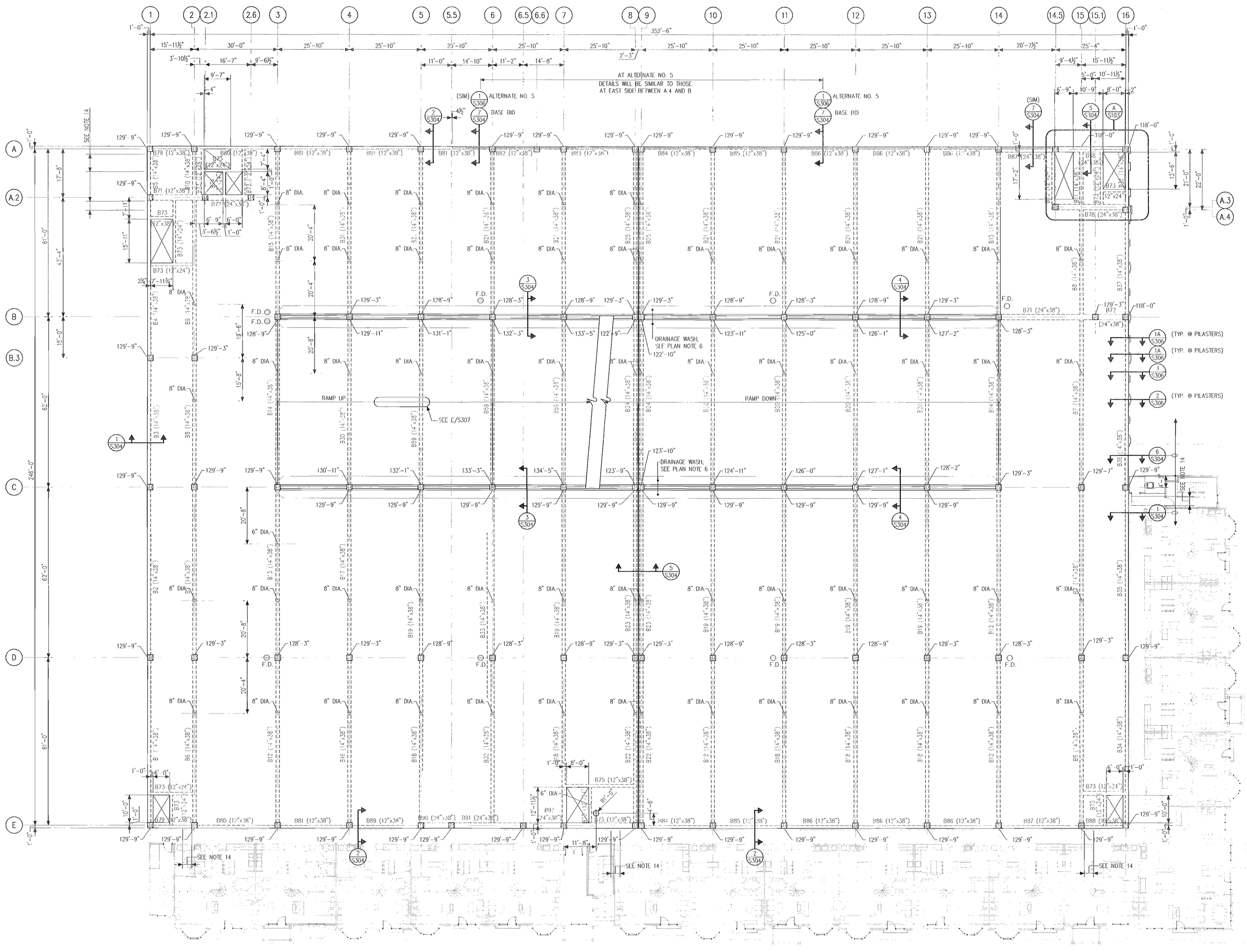

THIRD FLOOR FRAMING PLAN
1/16"=1'-0"

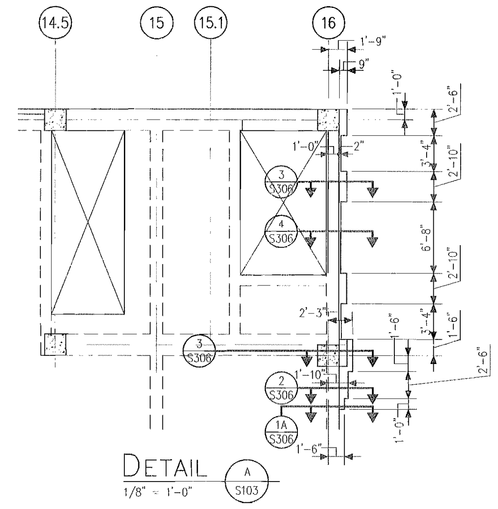

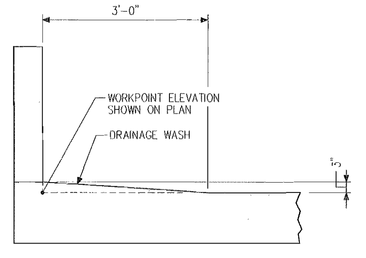

ELEVATIONS AT DRAINAGE "WASH"
NO SCALE

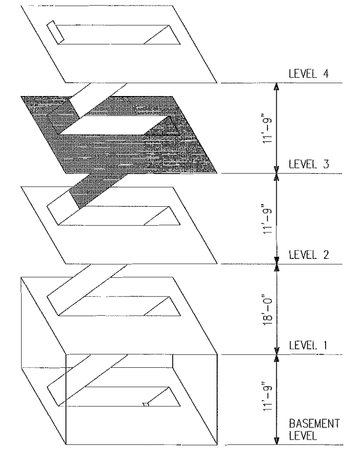

ISOMETRIC

PLAN NOTES

1. SEE DRAWING S002 FOR CONCRETE SCHEDULE AND GENERAL NOTES PERTAINING TO CONCRETE, POST-TENSIONED CONCRETE, REINFORCING STEEL, STRUCTURAL STEEL AND STEEL DECK.
2. SEE DRAWING S300 FOR CONCRETE COLUMN SCHEDULE, NOTES AND DETAILS.
3. SEE DRAWING SX FOR STEEL COLUMN SCHEDULE, NOTES AND DETAILS.
4. 129'-9" INDICATES TOP OF SLAB SPOT ELEVATION. REFERENCE ELEVATION: 100'-0" = 743'-0" U.S.C.S.
5. START OF RAMP: THE RAMP STARTING POINT MAY BE MOVED FROM THE BEAM CENTERLINE (AS SHOWN) TO THE RAMP SIDE OF THE BEAM (CONTRACTOR'S OPTION).
6. AT LOCATIONS OF DRAINAGE "WASH", TWO TOP OF SLAB SPOT ELEVATIONS ARE INDICATED. SEE DETAIL A/S104 (ELEVATIONS AT DRAINAGE "WASH").
7. "RXX" DENOTES POST-TENSIONED CONCRETE BEAM MARK. SEE S300 SERIES DRAWINGS FOR POST-TENSIONED CONCRETE BEAM SCHEDULE, NOTES AND DETAILS.
8. POST-TENSIONED ONE-WAY SLABS: 7" THICK UNLESS DETAILED OTHERWISE. SEE DRAWING S104A FOR SLAB REINFORCEMENT PLAN. SEE DRAWING S303 FOR POST-TENSIONED SLAB DETAILS.
9. ○ REPRESENTS FLOOR DRAIN CAST IN CONCRETE SLAB. SEE DETAIL J/S303 (TYPICAL FLOOR DRAIN). SEE ARCHITECTURAL AND PLUMBING DRAWINGS FOR LOCATIONS OF FLOOR DRAINS NOT SHOWN AND FOR SLAB DRAINAGE REQUIREMENTS AROUND THEM.
10. INDICATES CENTERLINE LOCATION OF SLEEVED OPENINGS THROUGH BEAM. SEE DETAIL H/S302.
11. ● INDICATES SLEEVED SLAB PENETRATION. VERIFY SIZES AND LOCATIONS OF SLEEVES WITH THE MECHANICAL AND ELECTRICAL CONTRACTORS. COORDINATE THE INSTALLATION OF SLEEVES WITH THE INSTALLATION OF SLAB REINFORCEMENT.
12. SEE ARCHITECTURAL DRAWINGS FOR INFORMATION REGARDING LOCATIONS OF STEEL PIPE BOLLARDS. SEE DETAIL K/S303 (STANDARD BOLLARD DETAIL FOR POST-TENSIONED SLAB) FOR ANCHORAGE REQUIREMENTS.
13. PENETRATING CONCRETE DECK SEALER: APPLY TO TOP SURFACE OF POST-TENSIONED SLABS IN ACCORDANCE WITH SECTION 07100, DECK WATERPROOFING, OF THE PROJECT MANUAL.
14. COORDINATE NOTCH REQUIRED IN BEAM FOR EXPANSION JOINT WITH EXPANSION JOINT SUPPLIER AND ARCHITECTURAL DRAWINGS.

FINK ROBERTS & PETRIE, INC.
Consulting Engineers
4040 Vincennes Circle Suite 300
Indianapolis, Indiana 46268

Eddy Street Commons
Phase II
Parking Garage
Project Number 108-004

Owner
City of South Bend, Indiana

Construction Manager
Kite Realty Group
30 South Meridian Street, Suite 1100
Indianapolis, Indiana 46204
317-577-5600

Structural Engineer
Fink, Roberts & Petrie, Inc.
4040 Vincennes Circle, Suite 300
Indianapolis, Indiana 46268
317-872-8400

Architect
Looney Ricks Kiss
175 Toyota Plaza, Suite 600
Memphis, Tennessee 38103
901-521-1440

Mechanical, Electrical & Plumbing Engineer
Circle Design Group
5510 South East Street, Suite F
Indianapolis, Indiana 46227
317-781-6200

Parking Consultant
Walker Parking Consultants
6602 East 75th Street, Suite 210
Indianapolis, Indiana 46250
317-842-6800

Civil Engineer/Landscape Architect
The Troyer Group
530 Union Street
Mishawaka, Indiana 46554
574-259-9976

100% Construction Documents
January 23, 2008

REVISION DESCRIPTION	REVISION DATE

CERTIFIED BY
JOSEPH M. PETRIE PE10100032 STATE OF INDIANA REGISTERED PROFESSIONAL ENGINEER

DESIGN DATE	DESIGN PROJECT NO.	DESIGN DRAWN BY	DESIGNED BY	
01/23/08	07097	SMC	JMP	

SHEET TITLE
THIRD FLOOR FRAMING PLAN

SHEET NO.
S104

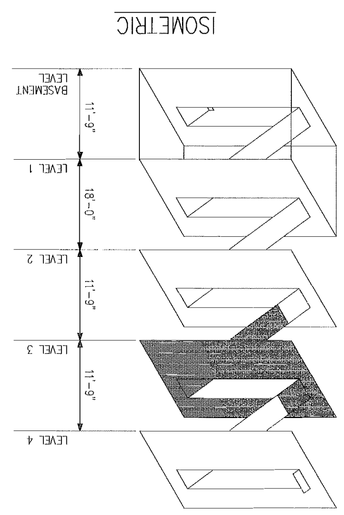

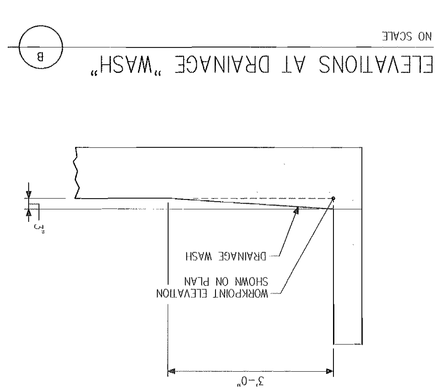

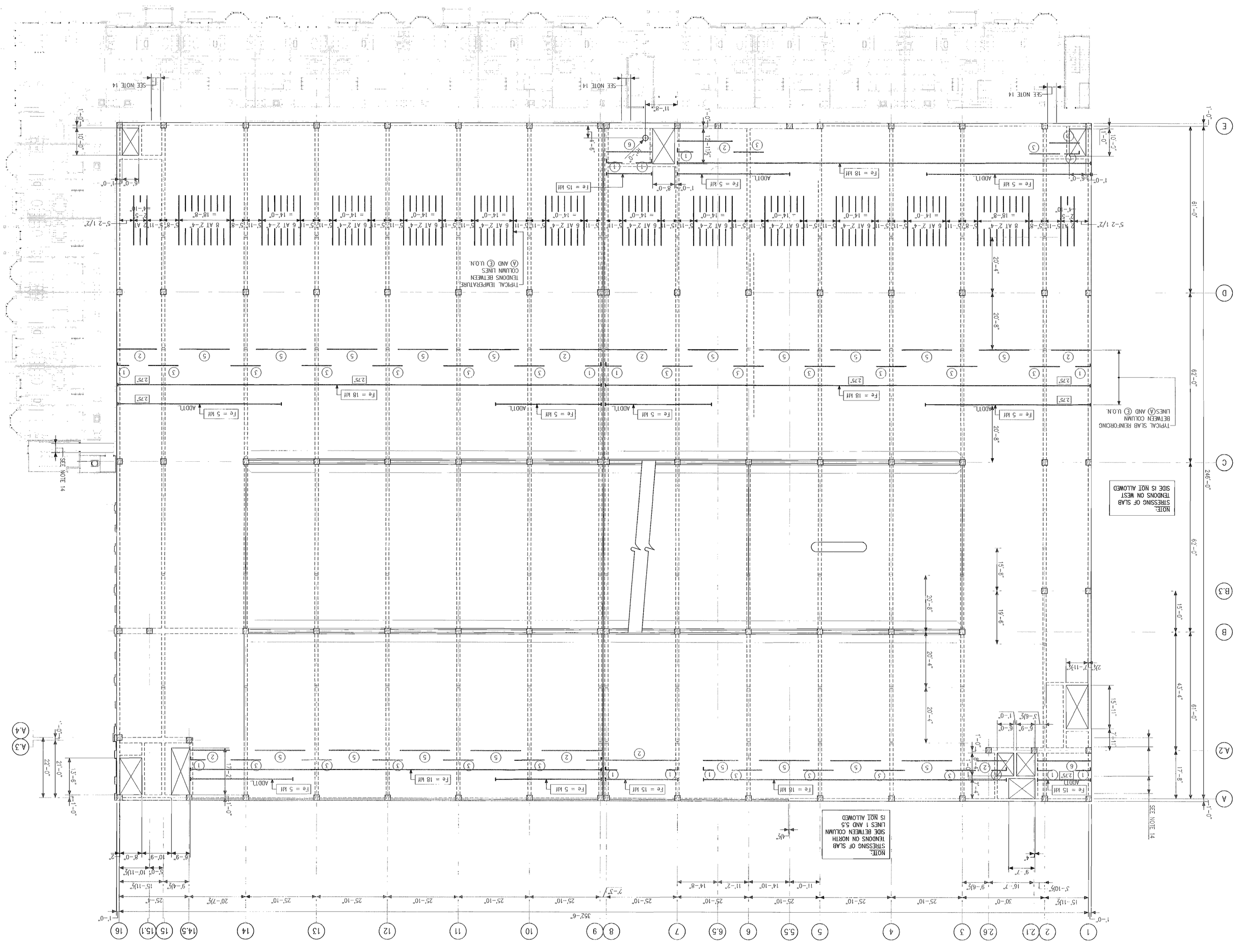

SHEET NO.

S104A

SHEET TITLE

THIRD FLOOR SLAB REINFORCING PLAN

DESIGN DATE 01/23/08
DESIGN PROJECT NO. 07097
DESIGN DRAWN BY SVC
CHECKED BY JMP

CERTIFIED BY

REVISION DATE | REVISION DESCRIPTION

100% Construction Documents
January 23, 2008

Eddy Street Commons
Phase II
Parking Garage
Project Number 108-004

Owner
City of South Bend, Indiana

Construction Manager
Kite Realty Group
30 South Meridian Street, Suite 1100
Indianapolis, Indiana 46204
317-577-5600

Structural Engineer
Fink, Roberts & Petrie, Inc.
4040 Vincennes Circle, Suite 300
Indianapolis, Indiana 46268
317-872-8400

Architect
Looney Ricks Kiss
175 Toyota Plaza, Suite 600
Memphis, Tennessee 38103
901-521-1440

Mechanical, Electrical & Plumbing Engineer
Circle Design Group
5510 South East Street, Suite F
Indianapolis, Indiana 46227
317-781-6200

Parking Consultant
Walker Parking Consultants
6602 East 75th Street, Suite 210
Indianapolis, Indiana 46250
317-842-6890

Civil Engineer/Landscape Architect
The Troyer Group
550 Union Street
Mishawaka, Indiana 46554
574-259-9976

FINK ROBERTS & PETRIE, INC.
Consulting Engineers
4040 Vincennes Circle Suite 300
Indianapolis, Indiana 46268

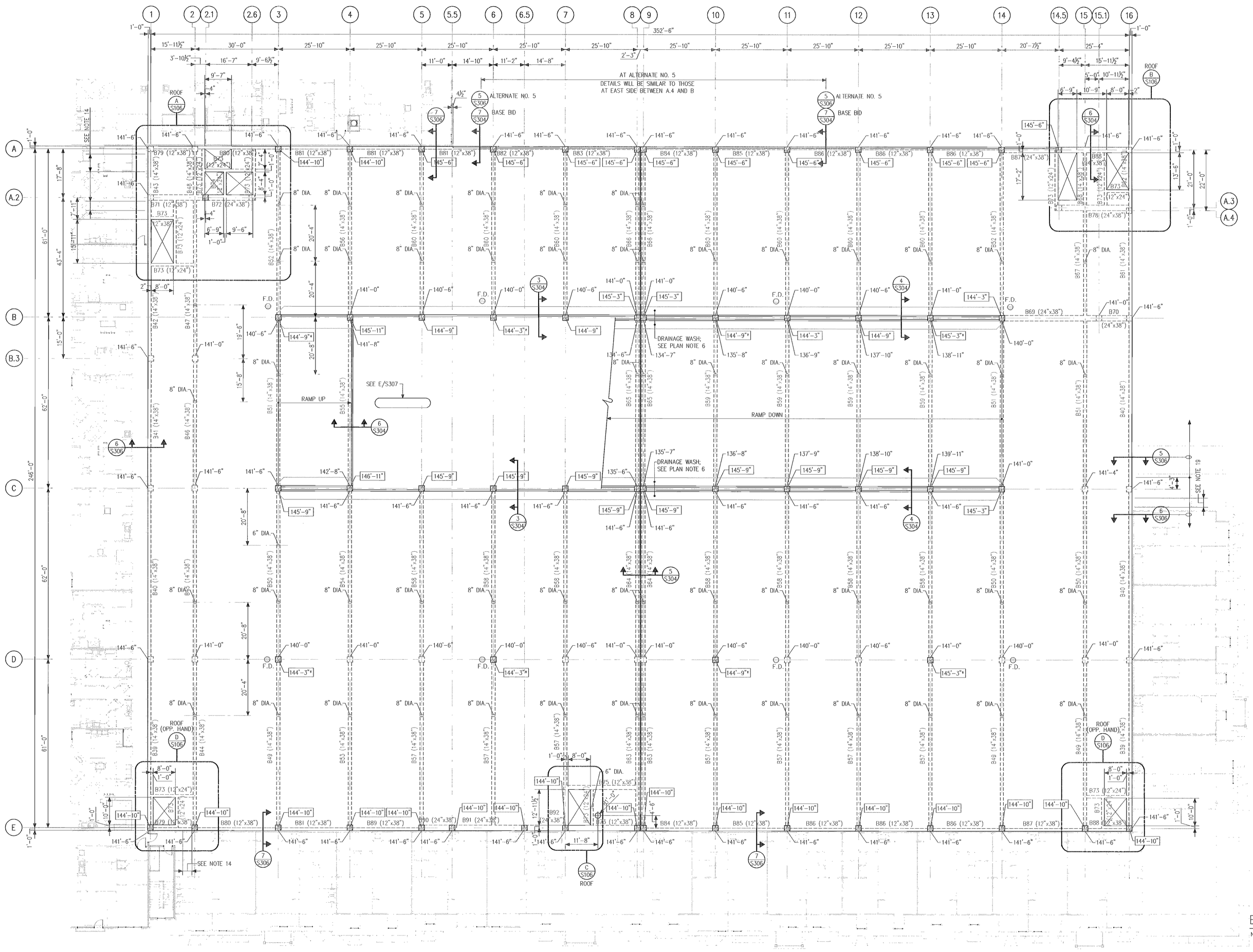

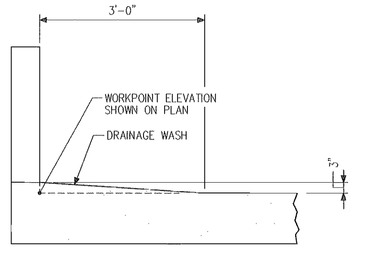

ELEVATIONS AT DRAINAGE "WASH"
NO SCALE

FOURTH FLOOR FRAMING PLAN
1/16"=1'-0"

NORTH

PLAN NOTES

1. SEE DRAWING S002 FOR CONCRETE SCHEDULE AND GENERAL NOTES PERTAINING TO CONCRETE, POST-TENSIONED CONCRETE, REINFORCING STEEL, STRUCTURAL STEEL AND STEEL DECK.
2. SEE DRAWING S300 FOR CONCRETE COLUMN SCHEDULE, NOTES AND DETAILS.
3. SEE DRAWING SX FOR STEEL COLUMN SCHEDULE, NOTES AND DETAILS.
4. 141'-6" INDICATES TOP OF SLAB SPOT ELEVATION. REFERENCE ELEVATION: 100'-0" = 743'-0" U.S.G.S.
5. START OF RAMP: THE RAMP STARTING POINT MAY BE MOVED FROM THE BEAM CENTERLINE (AS SHOWN) TO THE RAMP SIDE OF THE BEAM (CONTRACTOR'S OPTION).
6. AT LOCATIONS OF DRAINAGE "WASH", TWO TOP OF SLAB SPOT ELEVATIONS ARE INDICATED. SEE DETAIL A/S105 (ELEVATIONS AT DRAINAGE "WASH").
7. "BXX" DENOTES POST-TENSIONED CONCRETE BEAM MARK. SEE S300 SERIES DRAWINGS FOR POST-TENSIONED CONCRETE BEAM SCHEDULE, NOTES AND DETAILS.
8. POST-TENSIONED ONE-WAY SLABS: 7" THICK UNLESS DETAILED OTHERWISE. SEE DRAWING S105A FOR SLAB REINFORCEMENT PLAN. SEE DRAWING S303 FOR POST-TENSIONED SLAB DETAILS.
9. REPRESENTS FLOOR DRAIN CAST IN CONCRETE SLAB. SEE DETAIL J/S303 (TYPICAL FLOOR DRAIN). SEE ARCHITECTURAL AND PLUMBING DRAWINGS FOR LOCATIONS OF FLOOR DRAINS NOT SHOWN AND FOR SLAB DRAINAGE REQUIREMENTS AROUND THEM.
10. INDICATES CENTERLINE LOCATION OF SLEEVED OPENINGS THROUGH BEAM. SEE DETAIL H/S302.
11. INDICATES SLEEVED SLAB PENETRATION. VERIFY SIZES AND LOCATIONS OF SLEEVES WITH THE MECHANICAL AND ELECTRICAL CONTRACTORS. COORDINATE THE INSTALLATION OF SLEEVES WITH THE INSTALLATION OF SLAB REINFORCEMENT.
12. SEE ARCHITECTURAL DRAWINGS FOR INFORMATION REGARDING LOCATIONS OF STEEL PIPE BOLLARDS. SEE DETAIL K/S303 (STANDARD BOLLARD DETAIL FOR POST-TENSIONED SLAB) FOR ANCHORAGE REQUIREMENTS.
13. 145'-9" INDICATES TOP OF COLUMN ELEVATION. SEE DETAIL C/S300 (TYPICAL TOP OF EXTENDED COLUMN).
14. 145'-9"* INDICATES TOP OF COLUMN SUPPORTING LIGHT POLE. SEE DETAIL D/S300 (TYPICAL TOP OF EXTENDED COLUMN AT LIGHT POLE).
15. PENETRATING CONCRETE DECK SEALER: APPLY TO TOP SURFACE OF POST-TENSIONED SLABS IN ACCORDANCE WITH SECTION 07100, DECK WATERPROOFING, OF THE PROJECT MANUAL.
16. TOP OF STEEL BEAM (T.B.) ELEVATION = XXX'-XX" UNLESS NOTED OTHERWISE ADJACENT TO BEAM SIZE ON THE PLAN.
17. MC1 INDICATES BEAM-TO-COLUMN MOMENT CONNECTION MARK. SEE DRAWING SX FOR MOMENT CONNECTION DETAILS.
18. (A) INDICATES SPAN OF 2 1/2" REGULAR WEIGHT CONCRETE SLAB (CLASS B CONCRETE) PLACED ON 3", 20 GAGE COMPOSITE STEEL FLOOR DECK (TOTAL SLAB THICKNESS = 5 1/2"). TOP OF SLAB ELEVATION = XXX'-XX". SEE STEEL DECK NOTE NO. 3 ON DRAWING S8 FOR DECK FASTENING REQUIREMENTS. SEE DETAILS A/SX, B/SX AND C/SX. FOR SLAB REINFORCEMENT REQUIREMENTS.
19. COORDINATE NOTCH REQUIRED IN BEAM FOR EXPANSION JOINT WITH EXPANSION JOINT SUPPLIER AND ARCHITECTURAL DRAWINGS.

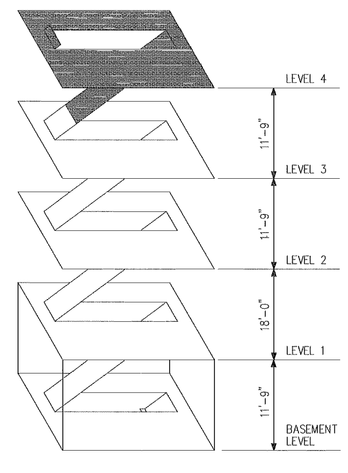

ISOMETRIC

FINK ROBERTS & PETRIE, INC.
Consulting Engineers
4040 Vincennes Circle Suite 300
Indianapolis, Indiana 46268

Eddy Street Commons
Phase II
Parking Garage
Project Number 108-004

Owner
City of South Bend, Indiana

Construction Manager
Kite Realty Group
30 South Meridian Street, Suite 1100
Indianapolis, Indiana 46204
317-577-5600

Structural Engineer
Fink, Roberts & Petrie, Inc.
4040 Vincennes Circle, Suite 300
Indianapolis, Indiana 46268
317-872-8400

Architect
Looney Ricks Kiss
175 Toyota Plaza, Suite 600
Memphis, Tennessee 38103
901-521-1440

Mechanical, Electrical & Plumbing Engineer
Circle Design Group
5510 South East Street, Suite F
Indianapolis, Indiana 46227
317-781-6200

Parking Consultant
Walker Parking Consultants
6602 East 75th Street, Suite 310
Indianapolis, Indiana 46250
317-842-6890

Civil Engineer/Landscape Architect
The Troyer Group
550 Union Street
Mishawaka, Indiana 46554
574-259-9976

100% Construction Documents
January 23, 2008

REVISION DESCRIPTION	REVISION DATE

CERTIFIED BY

ISSUED DATE	DESIGN PROJECT NO.	DESIGNED BY	CHECKED BY	
01/23/08	108-004	SVC	JMP	

SHEET TITLE
FOURTH FLOOR FRAMING PLAN

SHEET NO.
S105

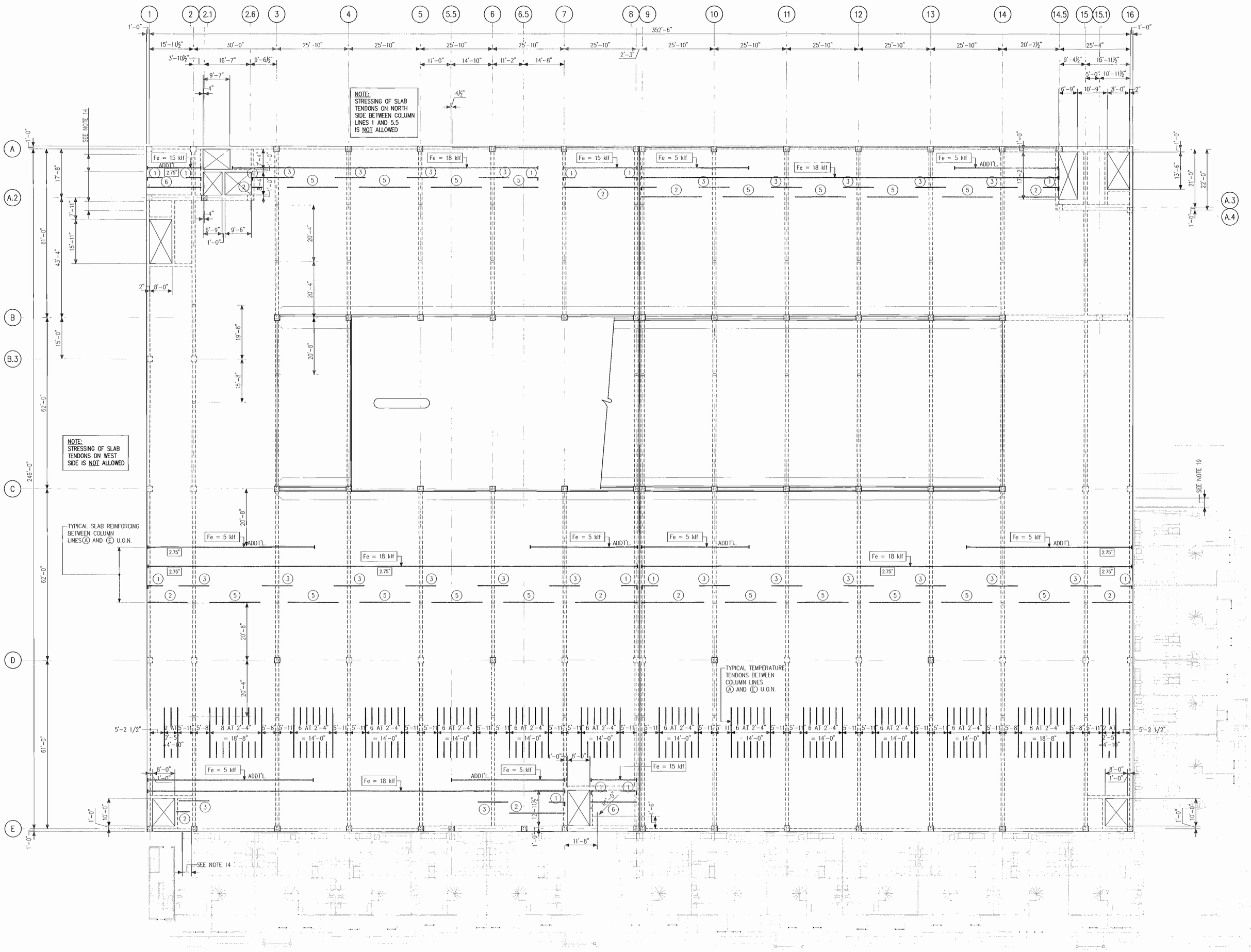

FOURTH FLOOR REINFORCING PLAN

1/16"=1'-0"

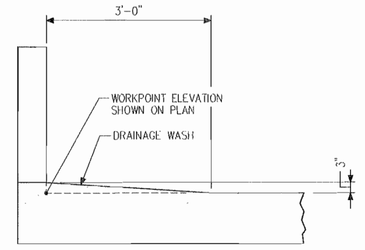

ELEVATIONS AT DRAINAGE "WASH"

NO SCALE

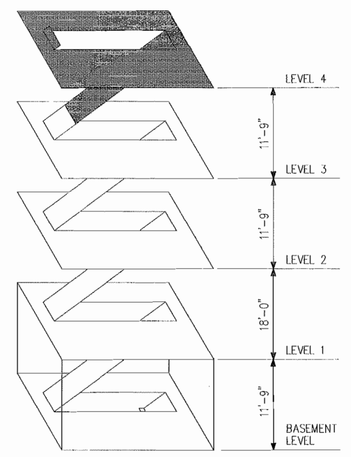

ISOMETRIC

FINK ROBERTS & PETRIE INC.
Consulting Engineers
4040 Vincennes Circle, Suite 300
Indianapolis, Indiana 46268

Eddy Street Commons
Phase II
Parking Garage
Project Number 108-004

Owner
City of South Bend, Indiana

Construction Manager
Kite Realty Group
30 South Meridian Street, Suite 1100
Indianapolis, Indiana 46204
317-577-5600

Structural Engineer
Fink, Roberts & Petrie, Inc.
4040 Vincennes Circle, Suite 300
Indianapolis, Indiana 46268
317-872-8400

Architect
Looney Ricks Kiss
175 Toyota Plaza, Suite 600
Memphis, Tennessee 38103
901-521-1440

Mechanical, Electrical & Plumbing Engineer
Circle Design Group
5510 South East Street, Suite F
Indianapolis, Indiana 46227
317-781-0200

Parking Consultant
Walker Parking Consultants
6002 East 75th Street, Suite 210
Indianapolis, Indiana 46250
317-842-6890

Civil Engineer/Landscape Architect
The Troyer Group
550 Union Street
Mishawaka, Indiana 46554
574-259-9976

100% Construction Documents
January 23, 2008

REVISION DATE	REVISION DESCRIPTION

CERTIFIED BY

DESIGN DATE	DESIGN DRAWN BY	DESIGN CHECKED BY
01/23/08	SVC	JMP

DRAWING NO. 07097

SHEET TITLE
FOURTH FLOOR SLAB
REINFORCING PLAN

SHEET NO.
S105A

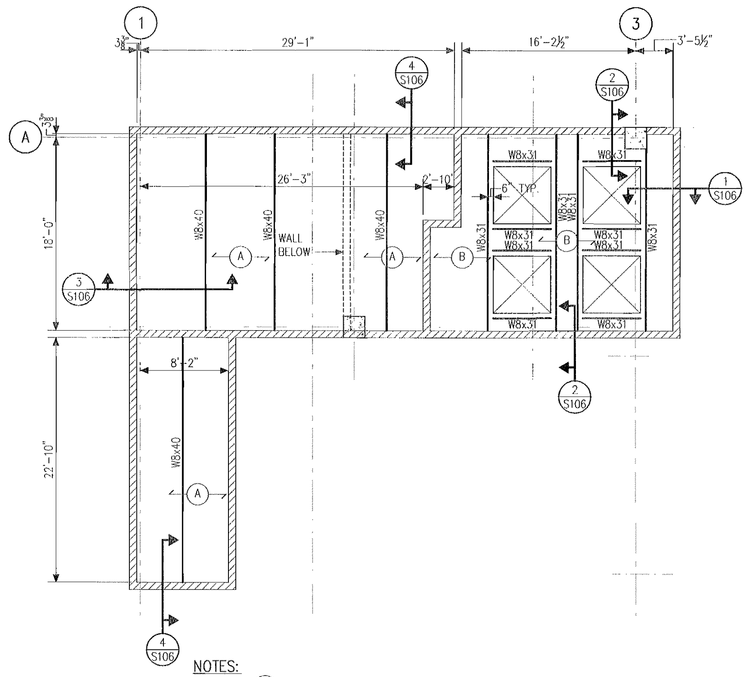
1
3
29'-1"
16'-2½"
3'-5½"
4 S106
2 S106
A
26'-3"
W8x40
WALL BELOW
W8x31
W8x21
W8x31
W8x31
W8x31

COLUMN FOOTING SCHEDULE

MARK	SIZE	REINFORCEMENT	REMARKS
F1	5'-6" x 5'-6" x 2'-0"	(10)-#5 x 5'-0" EACH WAY	
F2	6'-6" x 6'-6" x 2'-3"	(7)-#7 x 6'-0" EACH WAY	
F3	7'-6" x 7'-6" x 2'-6"	(7)-#8 x 7'-0" EACH WAY	
F4	8'-0" x 8'-0" x 2'-6"	(8)-#8 x 7'-6" EACH WAY	
F5	8'-6" x 8'-6" x 2'-9"	(7)-#9 x 8'-0" EACH WAY	
F6	10'-6" x 10'-6" x 3'-3"	(8)-#10 x 10'-0" EACH WAY	
F7	11'-0" x 11'-0" x 3'-3"	(9)-#10 x 10'-6" EACH WAY	
F8	11'-6" x 11'-6" x 3'-6"	(10)-#10 x 11'-0" EACH WAY	
F9	12'-0" x 12'-0" x 3'-6"	(11)-#10 x 11'-6" EACH WAY	

FOOTING NOTES

1. COMPACT ENGINEERED FILL SUPPORTING FOOTINGS TO 98% PERCENT MODIFIED PROCTOR MAXIMUM DRY DENSITY (ASTM D1557). SEE DETAIL A/S002.
2. FOOTINGS HAVE BEEN DESIGNED FOR AN ALLOWABLE NET BEARING PRESSURE OF 10,000 P.S.F. THE ENGINEERING TESTING FIRM SHALL VERIFY THAT THE SOIL BEARING CAPACITY IS ACCEPTABLE AT EACH COLUMN FOOTING AND AT 8'-0" INTERVALS ALONG WALL FOOTINGS AT THE INDICATED BEARING ELEVATIONS.
3. CENTER COLUMN AND WALL FOOTINGS UNDER THE COLUMN OR WALL ABOVE UNLESS OTHERWISE INDICATED.
4. PLACE FOOTINGS IN WOOD FORMS.
5. CONCRETE 28 DAY COMPRESSIVE STRENGTH: F'c = 3000 PSI (CLASS A).
6. REINFORCING STEEL: GRADE 60.
7. PROVIDE 2'-6" LAP SPLICES FOR LONGITUDINAL WALL FOOTING REINFORCEMENT (#5 BAR SIZE).
8. PROVIDE #4 TRANSVERSE BARS AT 6'-0" ON CENTER FOR WALL FOOTINGS, TO BE POSITIONED ON TOP OF THE LONGITUDINAL BARS, TO HOLD THEM SECURELY IN PLACE.
9. SEE DETAIL A/S200 (TYPICAL CONCRETE COLUMN AT FOOTING) AND DETAIL B/S200 (TYPICAL CONCRETE PIER AT FOOTING) FOR CONCRETE COVER REQUIREMENTS FOR REINFORCEMENT AND FOR INFORMATION REGARDING COLUMN AND PIER DOWELS, AND PLACEMENT TIES.
10. SEE DRAWING S002 FOR CONCRETE SCHEDULE AND GENERAL NOTES PERTAINING TO FOUNDATIONS, CONCRETE AND REINFORCING STEEL.

PIER SCHEDULE

PIER ID	SIZE	VERTICAL REINFORCEMENT	TIES	DETAIL	TOP/PIER ELEVATION
P1 P1A	24" x 24"	8-#9	#4 @ 12"	1/S202	98'-0" @ P1 96'-4" @ P1A
P2 P2A	24" x 24"	8-#9	#4 @ 12"	1/S202	98'-0" @ P2 96'-4" @ P2A
P3	24" x 24"	8-#9	#4 @ 12"	1/S202	96'-4"

PIER NOTES

1. SEE DETAIL B/S200 FOR TYPICAL CONCRETE PIER AT FOOTING.
2. SEE ANCHOR BOLT LAYOUT DETAILS AB1 THRU AB6 ON S202.

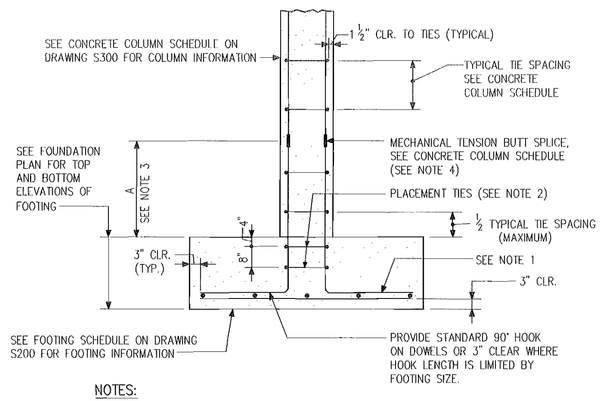

TYPICAL CONCRETE COLUMN AT FOOTING (A)

NOTES:

1. PROVIDE FOOTING DOWELS THE SAME SIZE AND SPACING AS VERTICAL COLUMN REINFORCEMENT.
2. PROVIDE ADDITIONAL PLACEMENT TIES SPACED AT 12" IN FOOTINGS 3'-0" OR MORE IN THICKNESS.
3. A = 2'-0" FOR 1/2 OF VERTICAL BARS.
   A = 4'-0" FOR 1/2 OF VERTICAL BARS
4. SEE SECTION 03200, CONCRETE REINFORCEMENT, ARTICLE 2.3, OF THE PROJECT MANUAL, FOR MECHANICAL TENSION BUTT SPLICE STANDARDS.

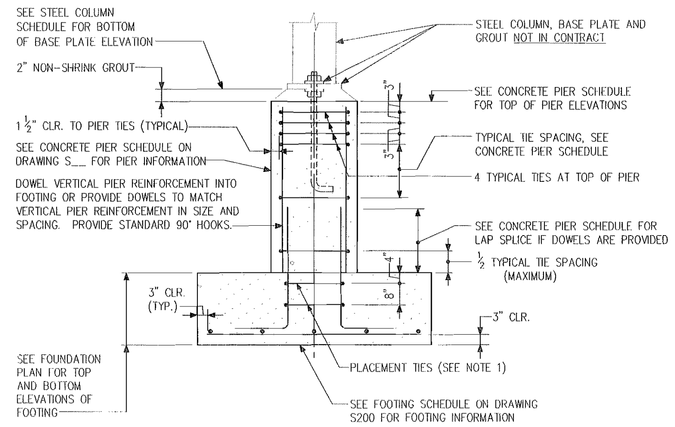

TYPICAL CONCRETE PIER AT FOOTING (B)

NOTES:

1. PROVIDE ADDITIONAL PLACEMENT TIES SPACED AT 12" IN FOOTINGS 3'-0" OR MORE IN THICKNESS.

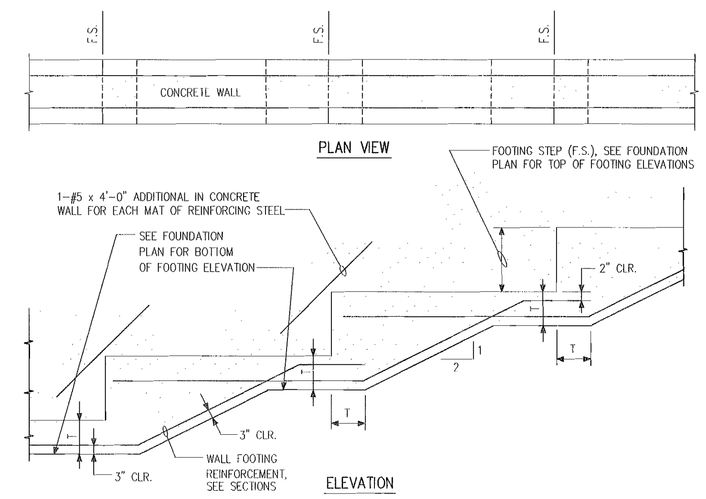

NOTES:

1. SEE FOUNDATIONS SECTION OF THE GENERAL NOTES ON DRAWING S002 FOR PREPARATION REQUIREMENTS FOR EARTH BEARING MATERIALS.

TYPICAL WALL FOOTING STEPS (C)

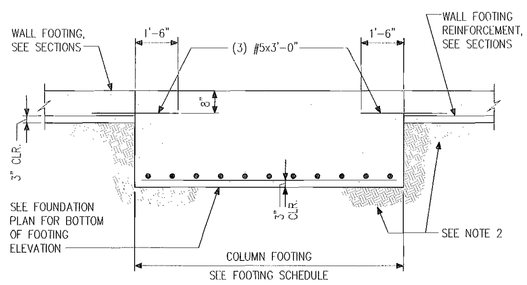

COLUMN & WALL FOOTINGS PLACED SEPARATELY

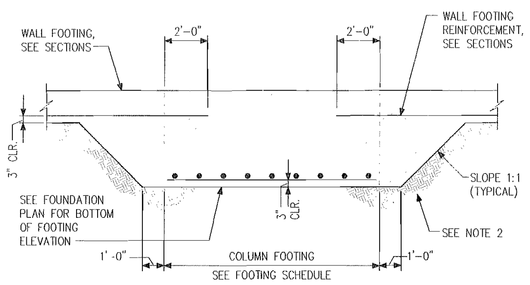

COLUMN & WALL FOOTINGS PLACED MONOLITHICALLY

NOTES:

1. EITHER OF TWO CONSTRUCTION METHODS SHOWN IS ACCEPTABLE.
2. SEE FOUNDATIONS SECTION OF THE GENERAL NOTES ON DRAWING S002 FOR PREPARATION REQUIREMENTS FOR EARTH BEARING MATERIALS.

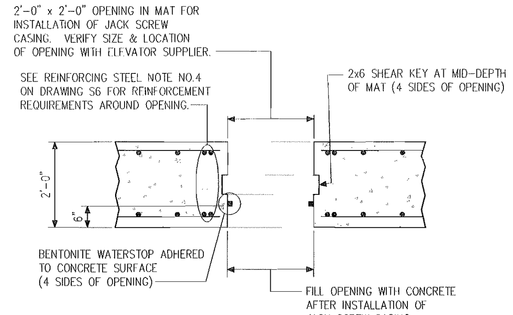

SECTION 4/S200 (½" = 1'-0")

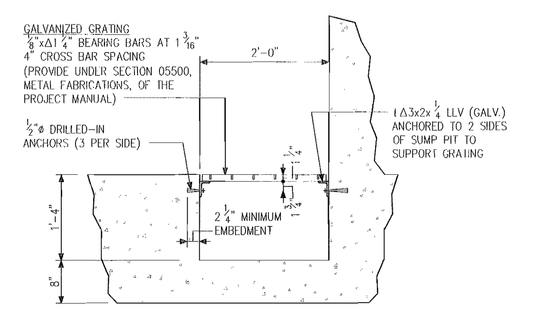

SECTION 5/S200 (½" = 1'-0")

TYPICAL COLUMN FOOTING – WALL FOOTING INTERSECTION (D)

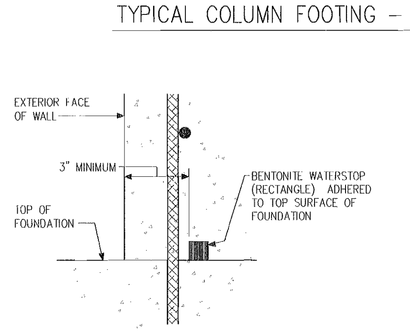

DETAIL E/S200 (3" = 1'-0")

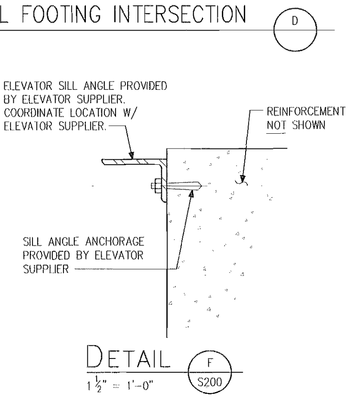

DETAIL F/S200 (1½" = 1'-0")

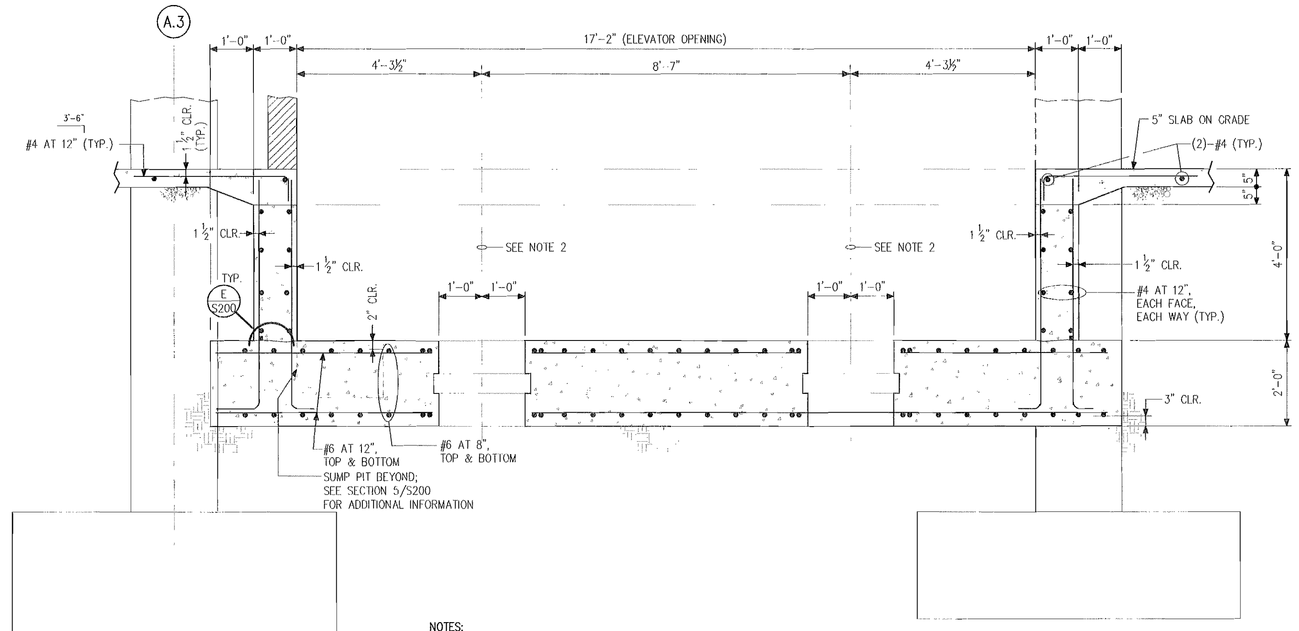

NOTES:

1. VERIFY DEPTH AND DIMENSIONS OF PIT WITH ELEVATOR SUPPLIER.
2. CENTERLINE OF OPENING IN MAT FOR INSTALLATION OF SCREW JACK CASING. SEE SECTION 4/S200.

SECTION 3/S200 (½" = 1'-0")

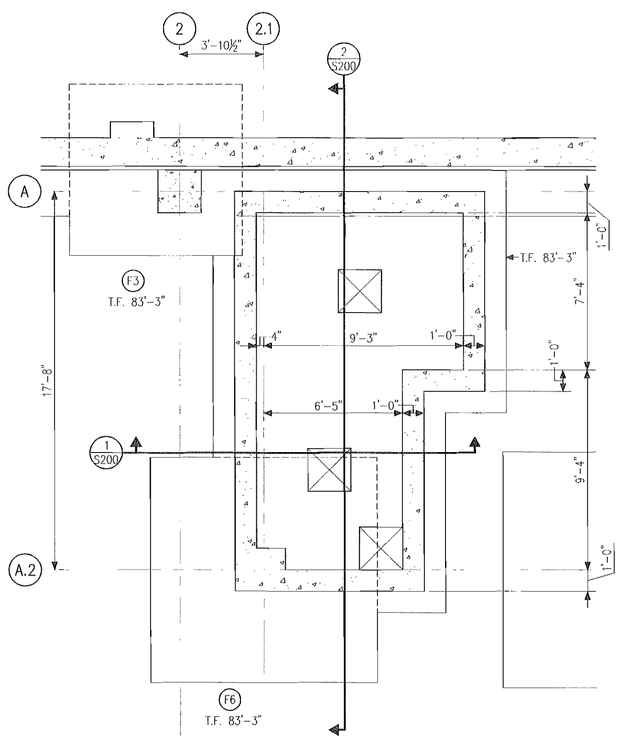

DETAIL E/S100 (1/4" = 1'-0")

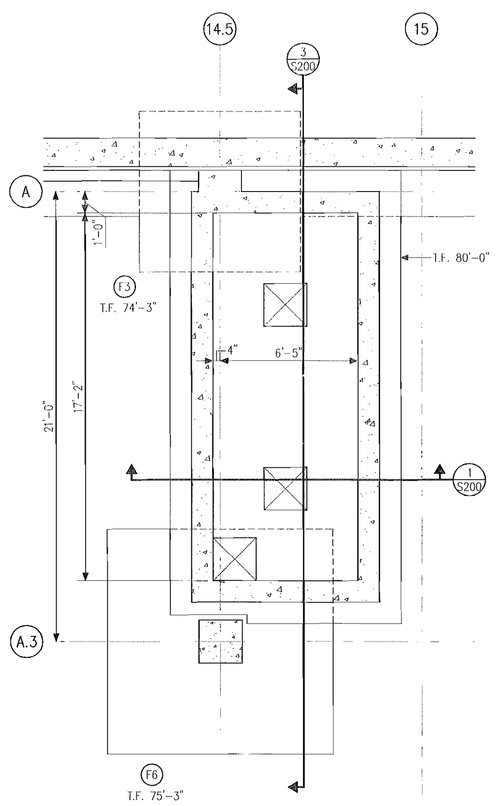

DETAIL F/S100 (1/4" = 1'-0")

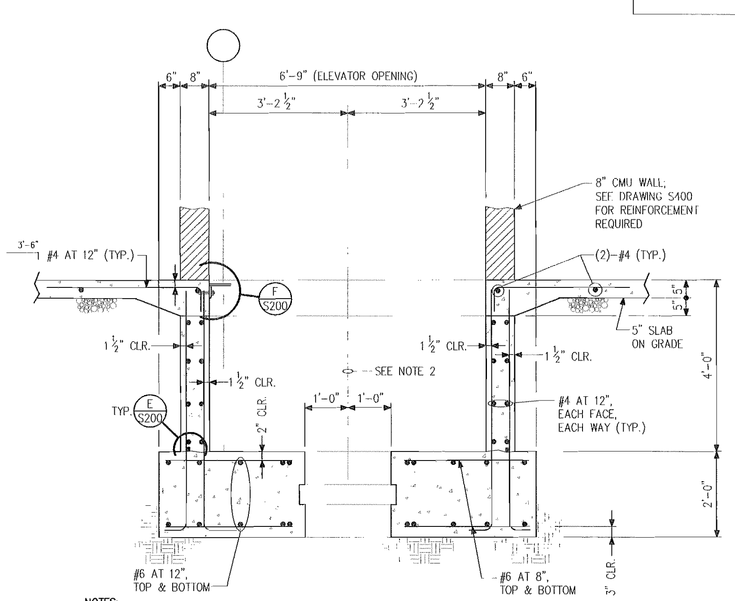

NOTES:

1. VERIFY DEPTH AND DIMENSIONS OF PIT WITH ELEVATOR SUPPLIER.
2. CENTERLINE OF OPENING IN MAT FOR INSTALLATION OF SCREW JACK CASING. SEE SECTION 4/S200.

SECTION 1/S200 (½" = 1'-0")

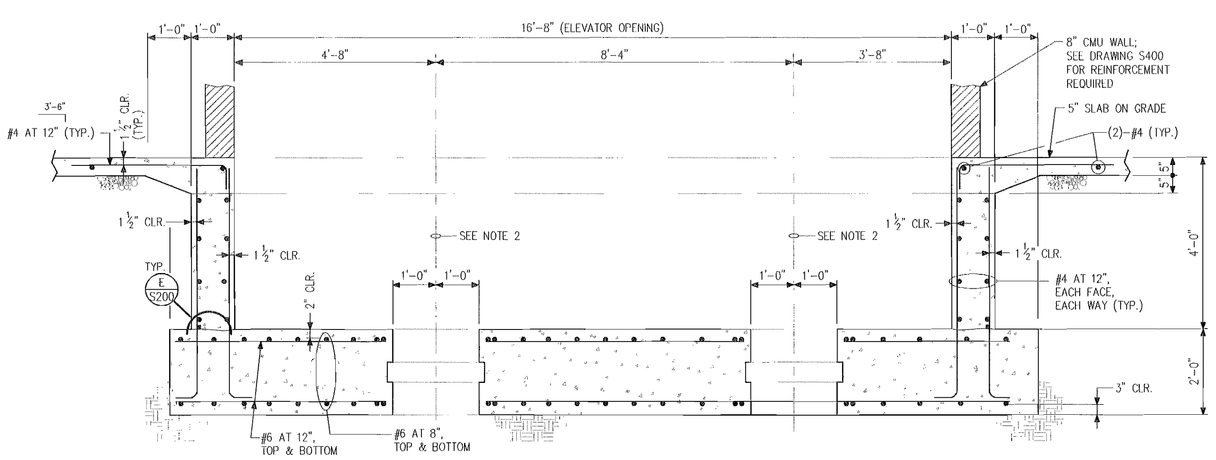

NOTES:

1. VERIFY DEPTH AND DIMENSIONS OF PIT WITH ELEVATOR SUPPLIER.
2. CENTERLINE OF OPENING IN MAT FOR INSTALLATION OF SCREW JACK CASING. SEE SECTION 4/S200.

SECTION 2/S200 (½" = 1'-0")

FINK ROBERTS & PETRIE, INC.
Consulting Engineers
4040 Vincennes Circle, Suite 300
Indianapolis, Indiana 46268

Eddy Street Commons
Phase II
Parking Garage
Project Number 108-004

Owner
City of South Bend, Indiana

Construction Manager
Kite Realty Group
30 South Meridian Street, Suite 1100
Indianapolis, Indiana 46204
317-577-5600

Structural Engineer
Fink, Roberts & Petrie, Inc.
4040 Vincennes Circle, Suite 300
Indianapolis, Indiana 46268
317-872-8400

Architect
Looney Ricks Kiss
175 Toyota Plaza, Suite 600
Memphis, Tennessee 38103
901-521-1440

Mechanical, Electrical & Plumbing Engineer
Circle Design Group
5510 South East Street, Suite F
Indianapolis, Indiana 46227
317-781-0200

Parking Consultant
Walker Parking Consultants
6602 East 75th Street, Suite 210
Indianapolis, Indiana 46250
317-842-6890

Civil Engineer/Landscape Architect
The Troyer Group
550 Union Street
Mishawaka, Indiana 46554
574-239-9976

100% Construction Documents
January 23, 2008

REVISION DESCRIPTION	REVISION DATE

CERTIFIED BY
REGISTERED PROFESSIONAL ENGINEER
PE10000102
STATE OF INDIANA
JAMES M. PETRIE

ISSUE DATE	ISSUE PURPOSE
01/23/08	07097

DESIGNED BY: SVC
DRAWN BY: JMP
CHECKED BY:

SHEET TITLE
FOOTING SCHEDULE AND TYPICAL DETAILS

SHEET NO.
S200

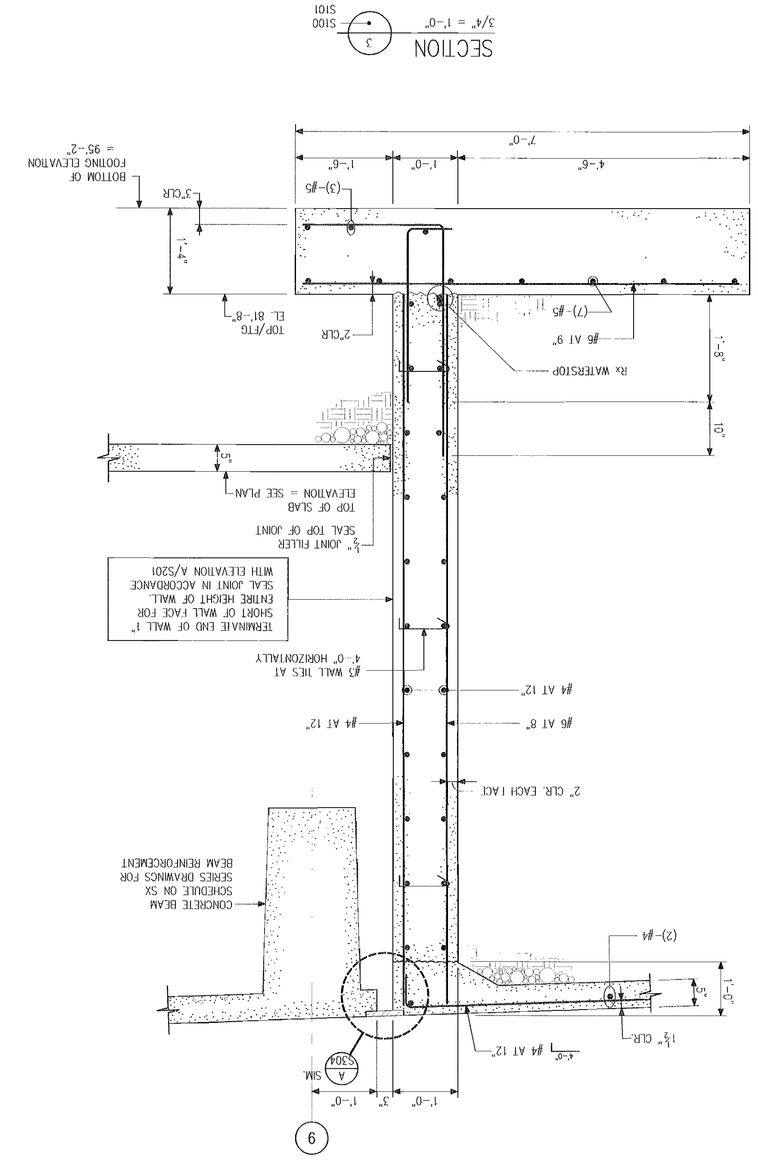

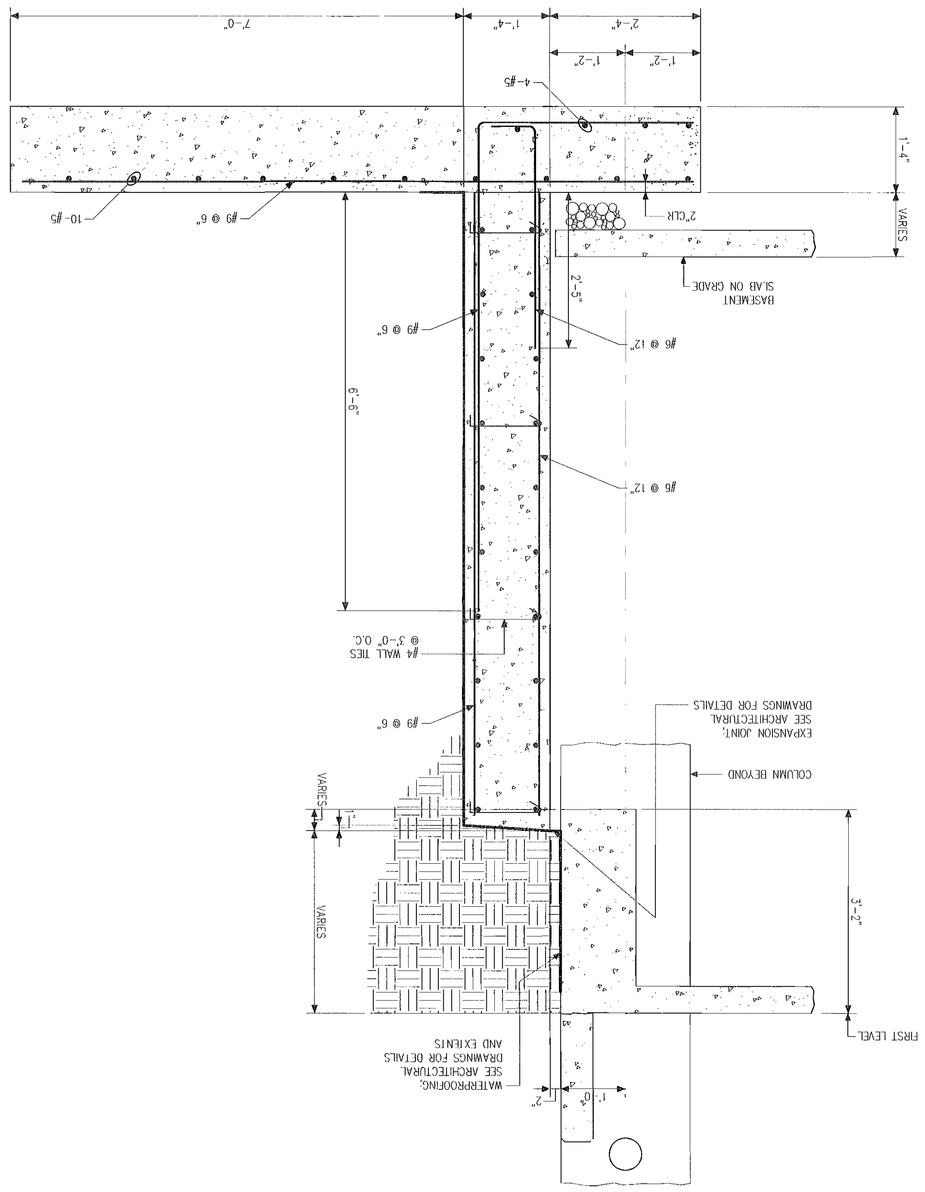

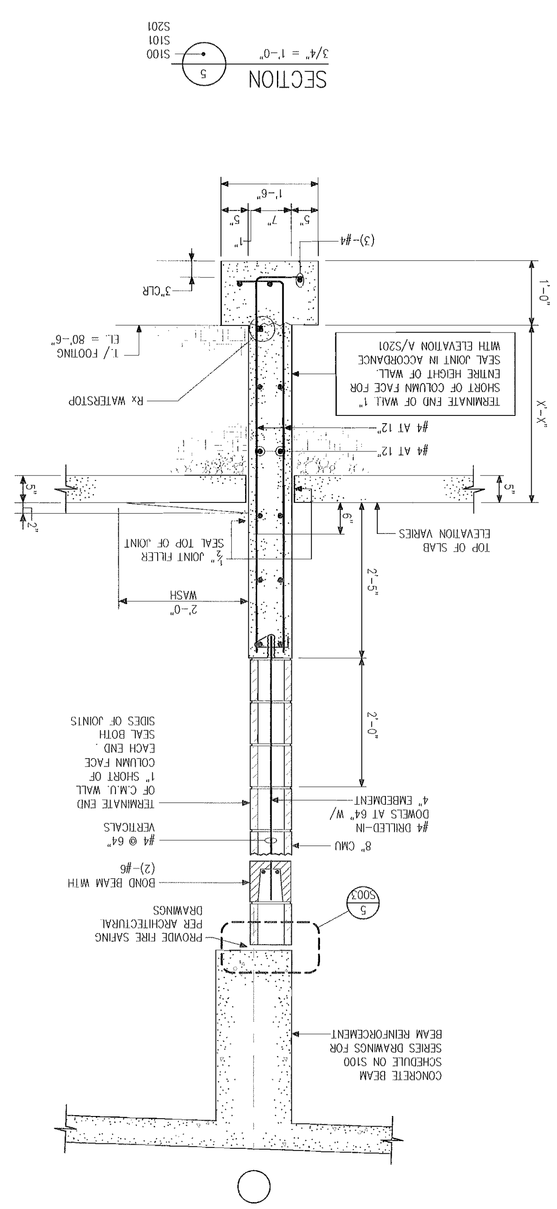

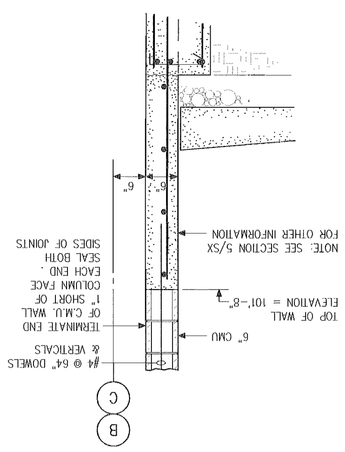

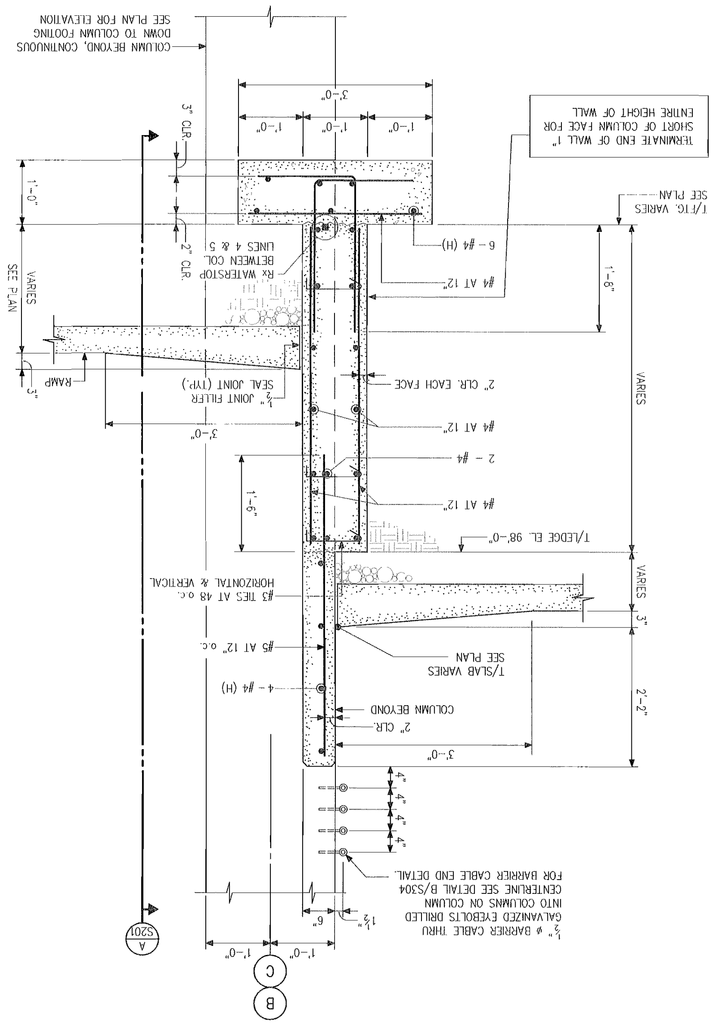

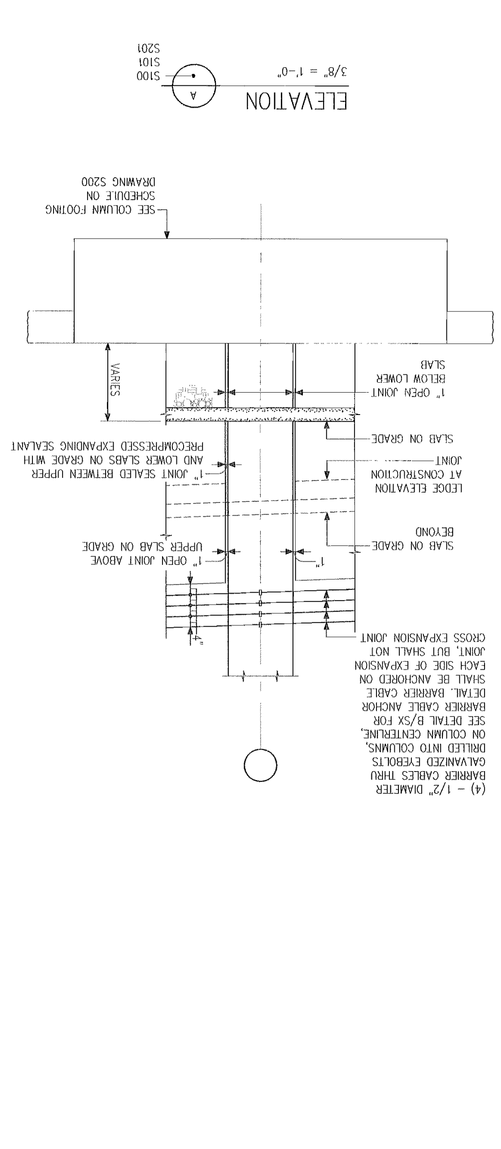

S201

SHEET NO.

SHEET TITLE

SECTIONS AND DETAILS

	DESIGN DATE	01/23/08
	PROJECT NO.	07097
DESIGN DRAWN BY		SVC
CHECKED BY		JMP

CERTIFIED BY

REVISION DATE	REVISION DESCRIPTION

1006 Construction Documents
January 23, 2008

Eddy Street Commons
Phase II
Parking Garage
Project Number 108-004

Owner
City of South Bend, Indiana

Construction Manager
K&E Realty Group
30 South Meridian Street, Suite 1100
Indianapolis, Indiana 46204
317-577-3600

Structural Engineer
Fink, Roberts & Petrie, Inc.
6949 Vincennes Circle, Suite 300
Indianapolis, Indiana 46268
317-872-8400

Architect
Looney Ricks Kiss
175 Toyota Plaza, Suite 600
Memphis, Tennessee 38103
901-521-1440

Mechanical, Electrical & Plumbing Engineer
Circle Design Group
4510 South East Street, Suite F
Indianapolis, Indiana 46227
317-781-6500

Plating Consultant
Walker Parking Consultants
6602 East 75th Street, Suite 210
Indianapolis, Indiana 46250
317-849-8800

Land Designer/Landscape Architect
The Tower Group
550 Union Street
Michiana, Indiana 46544
574-339-9976

FINK ROBERTS & PETRIE, INC.
Consulting Engineers
6949 Vincennes Circle
Indianapolis, Indiana 46268
317-872-8400

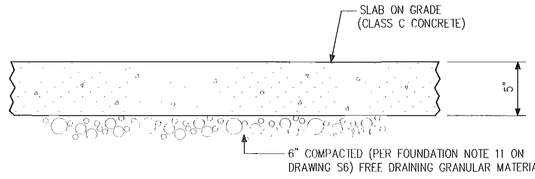

NOTES:

1. SEE CONCRETE GENERAL NOTE 8 ON DRAWING S002 AND SECTION 03300, CAST-IN-PLACE CONCRETE, ARTICLE 3.5 OF THE PROJECT MANUAL FOR SLAB FINISHING REQUIREMENTS.
2. SEE CONCRETE GENERAL NOTE 10 ON DRAWING S002 AND SECTION 03300, CAST-IN-PLACE CONCRETE, ARTICLE 3.8 OF THE PROJECT MANUAL FOR SLAB CURING REQUIREMENTS.

TYPICAL SLAB ON GRADE CONSTRUCTION

A / S101

1½" = 1'-0"

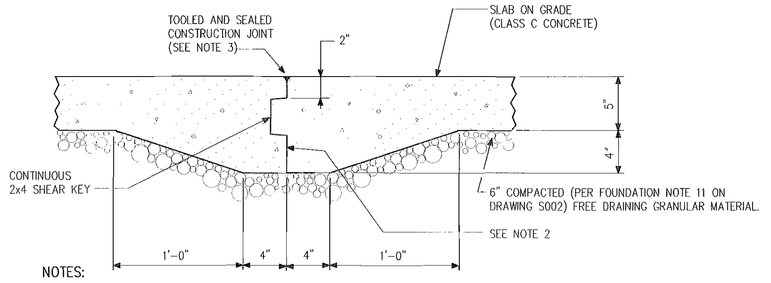

NOTES:

1. LOCATE CONSTRUCTION JOINTS AT CONTROL JOINT LOCATIONS.
2. APPLY LIQUID BONDBREAKER TO FULL DEPTH OF CONSTRUCTION JOINT.
3. COORDINATE TOOLING OF CONSTRUCTION JOINT WITH SEALANT MANUFACTURER. PREPARE AND SEAL JOINT AS SPECIFIED IN SECTION 07100, DECK WATERPROOFING, OF THE PROJECT MANUAL.

TYPICAL SLAB ON GRADE CONSTRUCTION JOINT

B / S101

1½" = 1'-0"

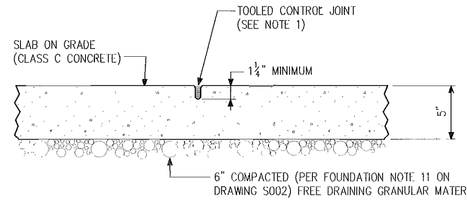

NOTES:

1. COORDINATE TOOLING OF CONTROL JOINT WITH SEALANT MANUFACTURER (1/2" MAXIMUM RADIUS). PREPARE AND SEAL JOINT AS SPECIFIED IN SECTION 07100, DECK WATERPROOFING, OF THE PROJECT MANUAL.

TYPICAL SLAB ON GRADE CONTROL JOINT

C / S101 S202

1½" = 1'-0"

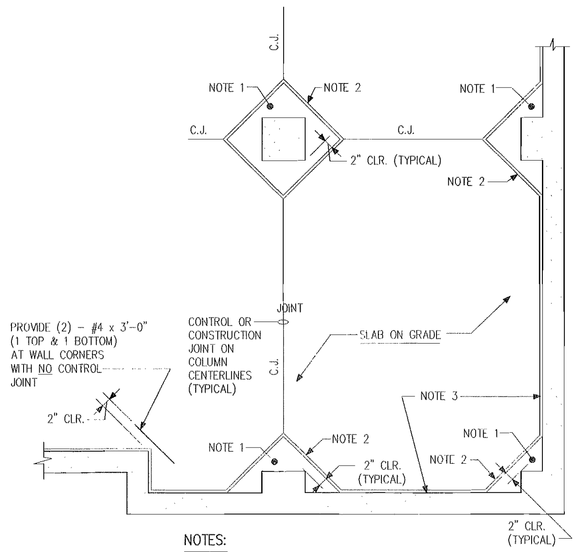

NOTES:

1. COLUMN ISOLATION SECTION: DEPTH OF CONCRETE ISOLATION SECTION TO MATCH THICKNESS OF ADJACENT SLAB ON GRADE.
2. PROVIDE JOINT FILLER BETWEEN COLUMN ISOLATION SECTIONS AND SLAB ON GRADE. PREPARE AND SEAL JOINT AS SPECIFIED IN DIVISION 7 OF THE PROJECT MANUAL.
3. PROVIDE JOINT FILLER BETWEEN WALL OR GRADE BEAM AND SLAB ON GRADE. PREPARE AND SEAL JOINT AS SPECIFIED IN SECTION 07100, DECK WATERPROOFING, OF THE PROJECT MANUAL.
4. "C.J." DENOTES TOOLED CONTROL JOINT IN SLAB ON GRADE. SEE DETAIL C/S202 (TYPICAL SLAB ON GRADE CONTROL JOINT).

TYPICAL COLUMN ISOLATION JOINT

D / S101

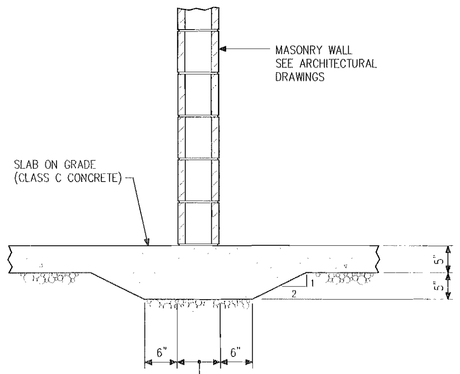

NOTES:

1. PROVIDE THICKENED SLABS UNDER MASONRY WALLS NOT SUPPORTED BY A FOOTING.

TYPICAL THICKENED SLAB UNDER MASONRY WALL

E / S101 S202

¾" = 1'-0"

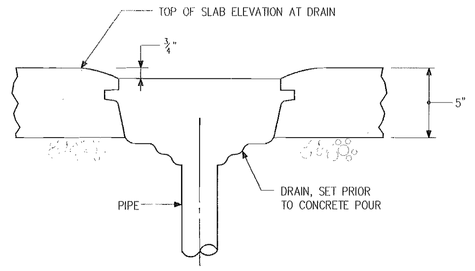

TYPICAL FLOOR DRAIN

F / S101

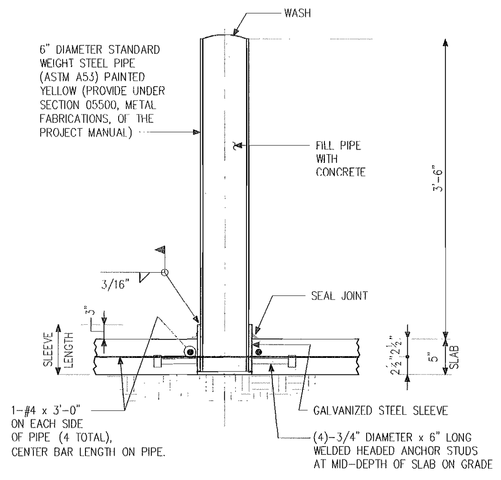

STANDARD BOLLARD DETAIL FOR SLAB ON GRADE

G / S101

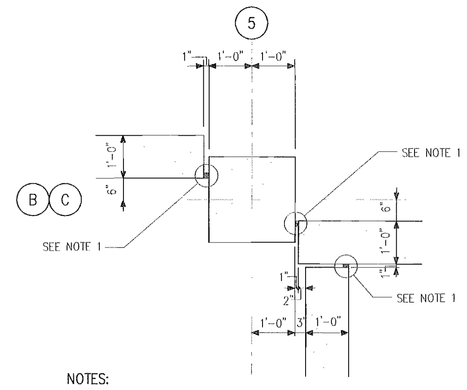

NOTES:

1. 1" JOINT SEALED BETWEEN UPPER AND LOWER SLABS ON GRADE WITH PRECOMPRESSED EXPANDING SEALANT.

DETAIL

H / S100 S101

½" = 1'-0"

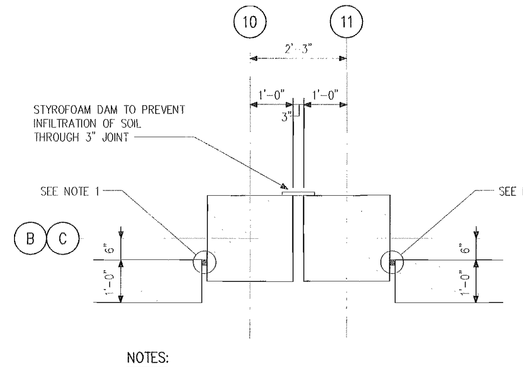

NOTES:

1. 1" JOINT SEALED BETWEEN UPPER AND LOWER SLABS ON GRADE WITH PRECOMPRESSED EXPANDING SEALANT.

DETAIL

J / S100 S101

½" = 1'-0"

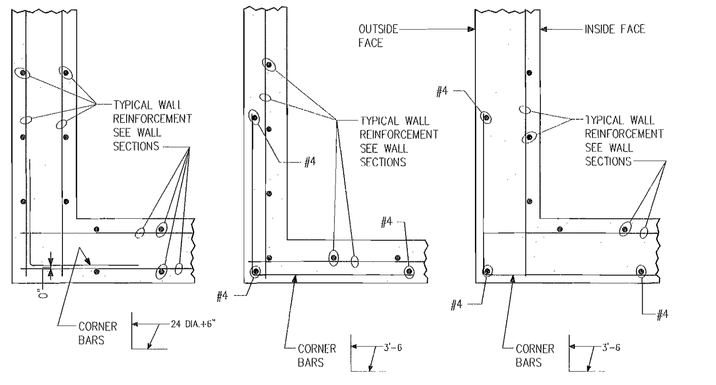

WALL REINFORCEMENT (BOTH FACES)

WALL REINFORCEMENT (MIDDLE)

WALL REINFORCEMENT (INSIDE FACE)

NOTES:

1. PROVIDE CORNER BARS AS SHOWN. MATCH HORIZONTAL WALL REINFORCEMENT IN BAR SIZE AND SPACING.
2. SEE APPLICABLE SECTIONS FOR REINFORCING STEEL CLEARANCES.
3. TERMINATE HORIZONTAL WALL REINFORCEMENT 2" CLEAR FROM END OF WALL.

TYPICAL CORNER REINFORCEMENT FOR WALLS – PLAN VIEW

K / S100 S101

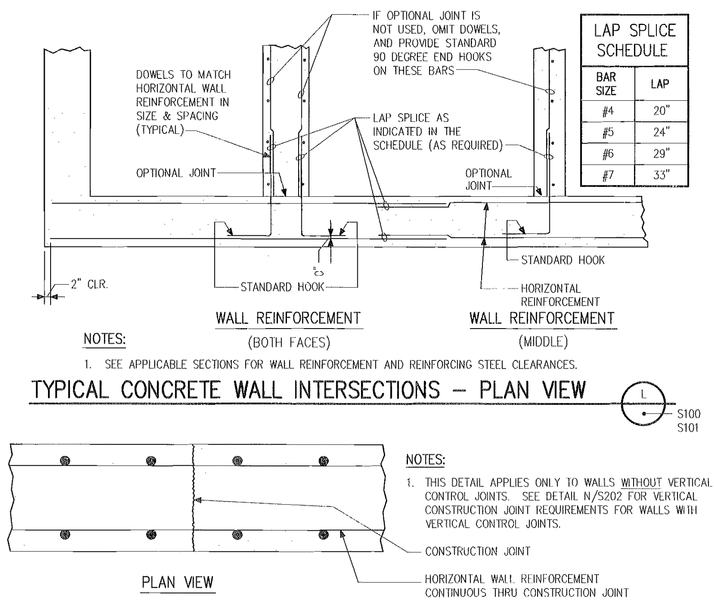

LAP SPLICE SCHEDULE	
BAR SIZE	LAP
#4	20"
#5	24"
#6	29"
#7	33"

NOTES:

1. SEE APPLICABLE SECTIONS FOR WALL REINFORCEMENT AND REINFORCING STEEL CLEARANCES.
2. THIS DETAIL APPLIES ONLY TO WALLS WITHOUT VERTICAL CONTROL JOINTS. SEE DETAIL N/S202 FOR VERTICAL CONSTRUCTION JOINT REQUIREMENTS FOR WALLS WITH VERTICAL CONTROL JOINTS.

TYPICAL CONCRETE WALL INTERSECTIONS – PLAN VIEW

L / S100 S101

TYPICAL VERTICAL WALL CONSTRUCTION JOINT

M / S100 S101

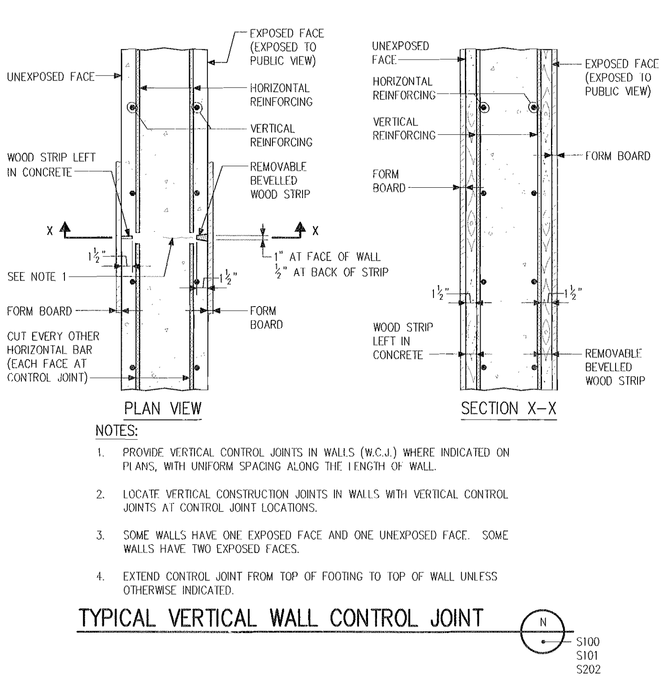

NOTES:

1. PROVIDE VERTICAL CONTROL JOINTS IN WALLS (W.C.J.) WHERE INDICATED ON PLANS, WITH UNIFORM SPACING ALONG THE LENGTH OF WALL.
2. LOCATE VERTICAL CONSTRUCTION JOINTS IN WALLS WITH VERTICAL CONTROL JOINTS AT CONTROL JOINT LOCATIONS.
3. SOME WALLS HAVE ONE EXPOSED FACE AND ONE UNEXPOSED FACE. SOME WALLS HAVE TWO EXPOSED FACES.
4. EXTEND CONTROL JOINT FROM TOP OF FOOTING TO TOP OF WALL UNLESS OTHERWISE INDICATED.

TYPICAL VERTICAL WALL CONTROL JOINT

N / S100 S101 S202

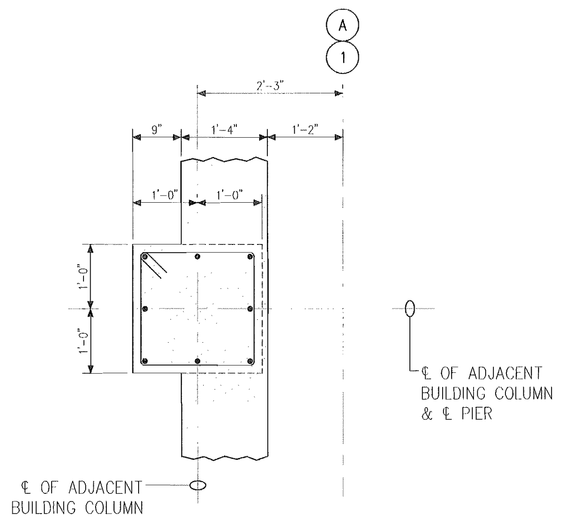

SECTION

1 / X X

3/4" = 1'-0"

FINK ROBERTS & PETRIE, INC.
Consulting Engineers
Indianapolis, Indiana 46268

Eddy Street Commons
Phase II
Parking Garage
Project Number 108-004

Owner
City of South Bend, Indiana

Construction Manager
Kite Realty Group
30 South Meridian Street, Suite 1100
Indianapolis, Indiana 46204
317-577-5600

Structural Engineer
Fink, Roberts & Petrie, Inc.
4040 Vincennes Circle, Suite 300
Indianapolis, Indiana 46268
317-872-8400

Architect
Looney Ricks Kiss
175 Toyota Plaza, Suite 600
Memphis, Tennessee 38103
901-521-1440

Mechanical, Electrical & Plumbing Engineer
Circle Design Group
5510 South East Street, Suite F
Indianapolis, Indiana 46227
317-781-0260

Parking Consultant
Walker Parking Consultants
6002 East 75th Street, Suite 210
Indianapolis, Indiana 46250
317-842-6890

Civil Engineer/Landscape Architect
The Troyer Group
550 Union Street
Mishawaka, Indiana 46554
574-259-9976

100% Construction Documents
January 23, 2008

REVISION DATE	REVISION DESCRIPTION

CERTIFIED BY

ISSUED DATE	PROJECT NO.	DESIGN DRAWN BY	CHECKED BY	
01/23/08	07097	SVC	JMP	

SHEET TITLE
SECTIONS AND DETAILS

SHEET NO.
S202

CONCRETE COLUMN SCHEDULE

MARK (SEE FRAMING PLAN FOR TOP OF COLUMN ELEVATIONS)												
FOURTH LEVEL		A-1 A-12 A-2 A-13 A-3 A-14 A-4 A-16 A-5 A-6 A-7 A-8 A-9 A-10 A-11	E-1 E-12 E-2 E-13 E-3 E-14 E 4 E-15 E-5 E-16 E-5.5 E-6 E-7 E-8 E-9 E-10 E-11	A-4.5 A.2-2 A.2-2.6 A.3-4.5 A.4-16	B-4 B-5 B-6 B-7 B-10 B-11 B-12 B-13	B-8 B-9 C-8 C-9	C-4 C-5 C-6 C-7 C-10 C-11 C-12 C-13	D-3 D-15 D-4 D-5 D-6 D-7 D-8 D-9 D-10 D-11 D-12 D-13 D-14	D-2 D-16	B.3-1 B.3-2 B-3 B-14 C-2 C-3 C-14 C-15 C-16	B-15.1 B-16		
EL. = SEE PLAN	SIZE	24"x 24"	24"x 24"	24"x 24"	24"x 24"	24"x 24"	24"x 24"	24"x 24"	24"x 24"	24"x 24"	24"x 24"	
	VERTICAL REINFORCEMENT	(16)-#11	(16)-#11	(16)-#11	(16)-#11	(12)-#11	(16)-#11	(14)-#11	(8)-#11	(8)-#11	(4)-#11	
	TIES	#4 @ 3"	#4 @ 3"	#4 @ 3"	#4 @ 3"	#4 @ 3"	#4 @ 3"	#4 @ 12"	#4 @ 12"	#4 @ 6"	#4 @ 12"	
THIRD LEVEL	DETAIL	C4	C4	C4	C4	C3	C4	C3	C2	C2	C1	
EL. = SEE PLAN	SIZE	24"x 24"	24"x 24"	24"x 24"	24"x 24"	24"x 24"	24"x 24"	24"x 24"	24"x 24"	24"x 24"	24"x 24"	
	VERTICAL REINFORCEMENT	(12)-#11	(12)-#11	(16)-#11	(16)-#11	(8)-#11	(16)-#11	(4)-#11	(8)-#11	(8)-#11	(4)-#11	
	TIES	#4 @ 8"	#4 @ 8"	#4 @ 8"	#4 @ 3"	#4 @ 6"	#4 @ 3"	#4 @ 12"	#4 @ 8"	#4 @ 8"	#4 @ 12"	
SECOND LEVEL	DETAIL	C3	C3	C4	C4	C2	C4	C1	C2	C2	C1	
EL. = SEE PLAN	SIZE	24"x 24"	24"x 24"	24"x 24"	24"x 24"	24"x 24"	24"x 24"	24"x 24"	24"x 24"	24"x 24"	24"x 24"	
	VERTICAL REINFORCEMENT	(12)-#11	(12)-#11	(16)-#11	(16)-#11	(8)-#11	(16)-#11	(4)-#11	(8)-#11	(8)-#11	(4)-#11	
	TIES	#4 @ 8"	#4 @ 8"	#4 @ 8"	#4 @ 3"	#4 @ 6"	#4 @ 3"	#4 @ 12"	#4 @ 8"	#4 @ 8"	#4 @ 12"	
FIRST LEVEL	DETAIL	C3	C3	C4	C4	C2	C4	C1	C2	C7	C1	
	SIZE	24"x 24"	24"x 24"	24"x 24"	24"x 24"	24"x 24"	24"x 24"	24"x 24"	24"x 24"	24"x 24"	24"x 24"	
	VERTICAL REINFORCEMENT	(12)-#11	(12)-#11	(16)-#11	(16)-#11	(12)-#11	(16)-#11	(8)-#11	(8)-#11	(8)-#11	(4)-#11	
	TIES	#4 @ 8"	#4 @ 8"	#4 @ 8"	#4 @ 3"	#4 @ 6"	#4 @ 3"	#4 @ 12"	#4 @ 8"	#4 @ 8"	#4 @ 12"	
	DETAIL	C3	C3	C4	C4	C3	C4	C2	C2	C2	C1	

CONCRETE COLUMN SCHEDULE NOTES:

1. CONCRETE 28 DAY COMPRESSIVE STRENGTH, f'c = 6000 PSI (CLASS C).
2. REINFORCING STEEL: GRADE 60.
3. SEE FOUNDATION PLAN FOR TOP OF FOOTING ELEVATIONS.
4. SEE FRAMING PLANS FOR TOP OF COLUMN ELEVATIONS.
5. SEE DETAIL A/S300 (TYPICAL CONCRETE COLUMN AT FOOTING), DETAIL B/S300 (TYPICAL COLUMN BUTT SPLICE), DETAIL C/S300 (TYPICAL TOP OF EXTENDED COLUMN) AND DETAIL D/S300 (TYPICAL TOP OF EXTENDED COLUMN AT LIGHT POLE) FOR INFORMATION REGARDING DETAILING OF COLUMN REINFORCEMENT AND ADDITIONAL TIE REQUIREMENTS.
6. SEE DETAILS E/S300, F/S300 AND G/S300 (TYPICAL COLUMN AT RAMP) FOR INFORMATION REGARDING DETAILING OF COLUMN REINFORCEMENT, ADDITIONAL TIE REQUIREMENTS AND COORDINATION WITH POST-TENSIONED BEAMS.
7. "TBS" INDICATES MECHANICAL TENSION BUTT SPLICE. SEE SECTION 03200, CONCRETE REINFORCEMENT, ARTICLE 2.3, OF THE PROJECT MANUAL, FOR MECHANICAL TENSION BUTT SPLICE STANDARDS.
8. WHERE MECHANICAL TENSION BUTT SPLICES ARE REQUIRED, STAGGER THE SPLICES AS SHOWN IN DETAIL A/S300 (TYPICAL CONCRETE COLUMN AT FOOTING) AND DETAIL B/S300 (TYPICAL COLUMN BUTT SPLICE).
9. TERMINATE COLUMN VERTICAL REINFORCEMENT, INDICATED AS DISCONTINUOUS ABOVE A GIVEN LEVEL, 3"-0" ABOVE THAT LEVEL.
10. BEGIN COLUMN VERTICAL REINFORCEMENT, INDICATED AS DISCONTINUOUS BELOW A GIVEN LEVEL, AT THAT LEVEL WITH NO SPLICES.
11. SEE DETAIL H/S300 (TYPICAL REINFORCEMENT AT BEAM PT ANCHORS) FOR ADDITIONAL REINFORCEMENT REQUIREMENTS.
12. SEE REINFORCING STEEL NOTE 14 ON DRAWING S002 FOR EPOXY-COATED REINFORCING STEEL REQUIREMENTS.
13. SEE DRAWING S002 FOR CONCRETE SCHEDULE AND GENERAL NOTES PERTAINING TO CONCRETE AND REINFORCING STEEL.

ORIENT VERTICAL BAR BUNDLES AS SHOWN TO FACILITATE INSTALLATION OF BEAM POST-TENSIONING TENDONS

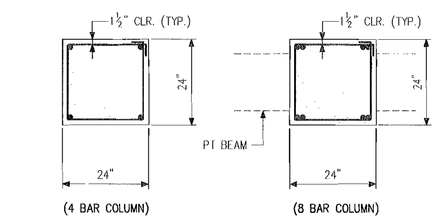

COLUMN DETAIL C1
1/2" = 1'-0"

COLUMN DETAIL C2
1/2" = 1'-0"

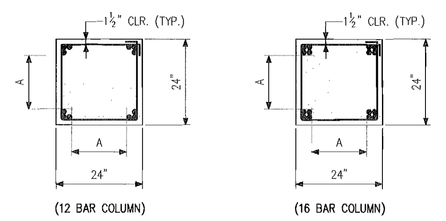

COLUMN DETAIL C3
1/2" = 1'-0"

COLUMN DETAIL C4
1/2" = 1'-0"

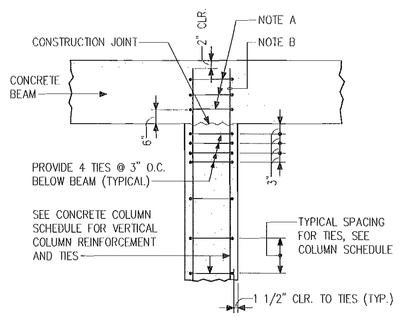

NOTE A: PROVIDE TIES AT 6" O.C. THRU CONCRETE BEAM DEPTH SPLIT TIES, ▭, MAY BE USED IF A MINIMUM LAP OF 20" IS PROVIDED.

NOTE B: COLUMNS

- 1 OF 4 BUNDLED BARS IN EACH CORNER SHALL BE PROVIDED WITH A MRC D-158 STRUCTURAL REBAR END ANCHOR (BY DAYTON SUPERIOR) . TOP OF ANCHOR SHALL BE LOCATED 2" BELOW TOP OF CONCRETE DECK ELEVATION .
- 3 OF 4 BUNDLED BARS IN EACH CORNER SHALL BE PROVIDED AS SHOWN IN J/S300 (I.E. WITHOUT END ANCHOR) . TOP OF BARS SHALL BE LOCATED 4" BELOW TOP OF CONCRETE DECK ELEVATION .

TYPICAL TOP OF COLUMN DETAIL — J / S300

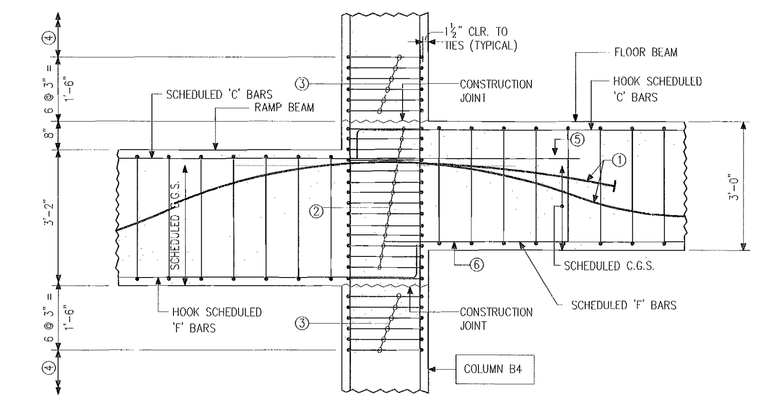

NOTES:

① CONTINUE ENOUGH TENDON THROUGH BOTH BEAMS TO MEET REQUIRED FORCE IN RAMP BEAM . DEAD END ANY ADDITIONAL TENDON AT BEAM MID-DEPTH AT 1/4 POINT OF FLOOR BEAM .

② PROVIDE TIES BETWEEN CONSTRUCTION JOINTS AT 3" O.C. USE SPLIT TIES, ▭ , WITH A MINIMUM LAP OF 20".

③ TYPICAL TIE SHAPE, ▭, AS INDICATED IN COLUMN DETAILS.

④ SEE CONCRETE COLUMN SCHEDULE ON DRAWING S300 FOR TYPICAL TIE SPACING.

⑤ EXTEND BEAM TOP REINFORCEMENT INTO ADJACENT SPAN. WITH LENGTH BEYOND COLUMN FACE EQUAL TO TYPE I LAP SPLICE (SEE TENSION LAP SPLICE TABLE ON DRAWING S10).

⑥ EXTEND BEAM BOTTOM REINFORCEMENT 1'-0" INTO COLUMN.

TYPICAL COLUMN AT RAMP — G / S300

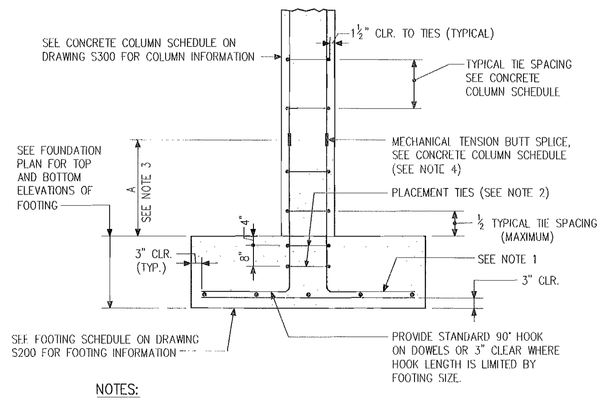

NOTES:

1. PROVIDE FOOTING DOWELS THE SAME SIZE AND SPACING AS VERTICAL COLUMN REINFORCEMENT.
2. PROVIDE ADDITIONAL PLACEMENT TIES SPACED AT 12" IN FOOTINGS 3'-0" OR MORE IN THICKNESS.
3. A = 2'-0" FOR 1/2 OF VERTICAL BARS
   A = 4'-0" FOR 1/2 OF VERTICAL BARS
4. SEE SECTION 03200, CONCRETE REINFORCEMENT, ARTICLE 2.3, OF THE PROJECT MANUAL, FOR MECHANICAL TENSION BUTT SPLICE STANDARDS.

TYPICAL CONCRETE COLUMN AT FOOTING — A / S300

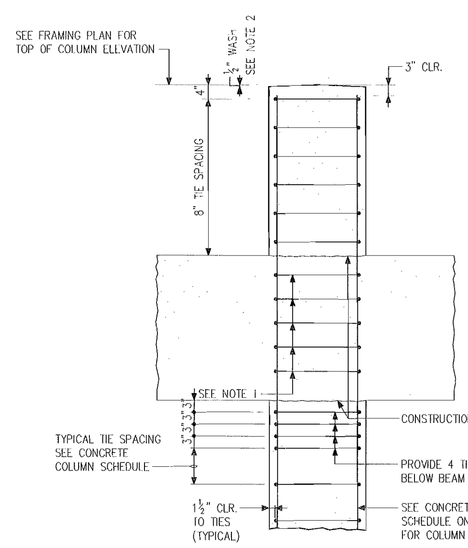

NOTES:

① PROVIDE TIES @ 6" O.C. THRU CONCRETE BEAM DEPTH. SPLIT TIES, ▭ MAY BE USED IF A MINIMUM LAP OF 20" IS PROVIDED.

② SEE APPLICABLE SECTIONS FOR PERIMETER COLUMN WASH.

TYPICAL TOP OF EXTENDED COLUMN DETAIL — C / S105, S300

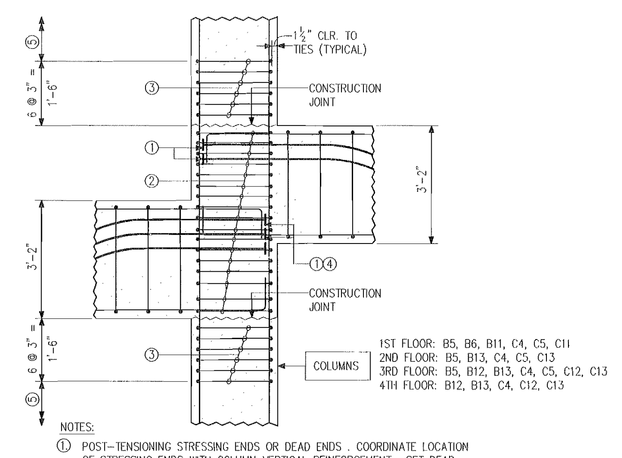

NOTES:

① POST-TENSIONING STRESSING ENDS OR DEAD ENDS . COORDINATE LOCATION OF STRESSING ENDS WITH COLUMN VERTICAL REINFORCEMENT . SET DEAD ENDS INSIDE COLUMN VERTICAL REINFORCEMENT .

② PROVIDE TIES BETWEEN CONSTRUCTION JOINTS AT 3" O.C. USE SPLIT TIES, ▭ , WITH A MINIMUM LAP OF 20".

③ TYPICAL TIE SHAPE, ▭, AS INDICATED IN COLUMN DETAILS.

④ ADJUST BEAM BOTTOM REINFORCEMENT HORIZONTALLY TO ALLOW FOR PLACEMENT OF PT ANCHORS.

⑤ SEE CONCRETE COLUMN SCHEDULE ON DRAWING S300 FOR TYPICAL TIE SPACING.

TYPICAL COLUMN AT RAMP — E / S300

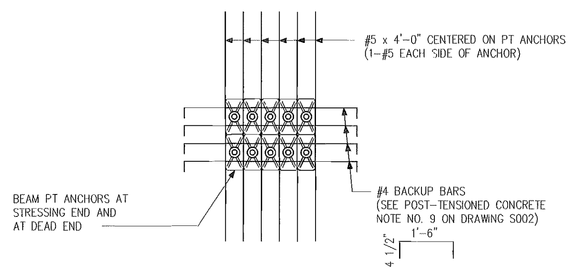

TYPICAL REINFORCEMENT AT BEAM PT ANCHORS — H / S300

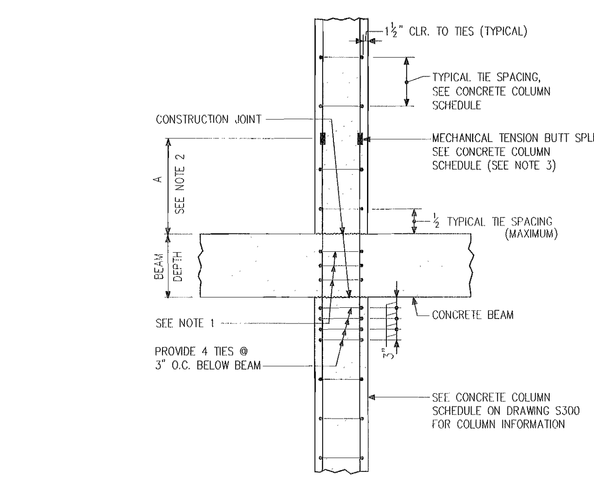

NOTES:

1. PROVIDE TIES AT 6" O.C. THRU CONCRETE BEAM DEPTH. SPLIT TIES, ▭ MAY BE USED IF A MINIMUM LAP OF 20" IS PROVIDED.
2. A = 2'-0" FOR 1/2 OF VERTICAL BARS
   A = 4'-0" FOR 1/2 OF VERTICAL BARS
3. SEE SECTION 03200, CONCRETE REINFORCEMENT, ARTICLE 2.3, OF THE PROJECT MANUAL, FOR MECHANICAL TENSION BUTT SPLICE STANDARDS.

TYPICAL COLUMN BUTT SPLICE — B / S300

NOTES:

1. PROVIDE TIES @ 6" O.C. THRU CONCRETE BEAM DEPTH. SPLIT TIES, ▭ MAY BE USED IF A MINIMUM LAP OF 20" IS PROVIDED.
2. COORDINATE LIGHT POLE ANCHORAGE WITH LIGHT POLE MANUFACTURER. SEE FOURTH LEVEL FRAMING PLAN ON S105 FOR LOCATION OF LIGHT POLE COLUMNS.

TYPICAL TOP OF EXTENDED COLUMN AT LIGHT POLE DETAIL — D / S105, S300

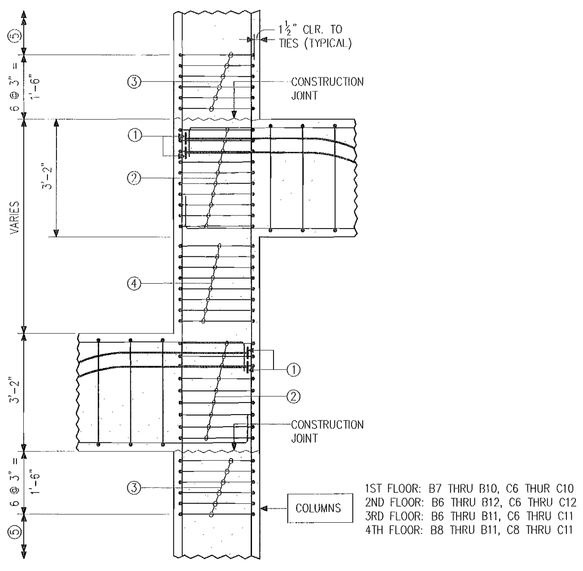

NOTES:

① POST-TENSIONING STRESSING ENDS OR DEAD ENDS . COORDINATE LOCATION OF STRESSING ENDS WITH COLUMN VERTICAL REINFORCEMENT . SET DEAD ENDS INSIDE COLUMN VERTICAL REINFORCEMENT .

② PROVIDE TIES WITHIN BEAM DEPTHS AT 3" O.C. USE SPLIT TIES, ▭ , WITH A MINIMUM LAP OF 20".

③ TYPICAL TIE SHAPE, ▭, AS INDICATED IN COLUMN DETAILS.

④ PROVIDE TIES AT 3" O.C., WITH TYPICAL TIE SHAPE, ▭, AS INDICATED IN COLUMN DETAILS.

⑤ SEE CONCRETE COLUMN SCHEDULE ON DRAWING S300 FOR TYPICAL TIE SPACING.

TYPICAL COLUMN AT RAMP — F / S300

FINK ROBERTS & PETRIE, INC.
Consulting Engineers
130 East 96th Street, Suite 200
Indianapolis, Indiana 46268

Eddy Street Commons
Phase II
Parking Garage
Project Number 108-004

Owner
City of South Bend, Indiana

Construction Manager
Kite Realty Group
30 South Meridian Street, Suite 1100
Indianapolis, Indiana 46204
317-577-5600

Structural Engineer
Fink, Roberts & Petrie, Inc.
4040 Vincennes Circle, Suite 300
Indianapolis, Indiana 46268
317-872-8400

Architect
Looney Ricks Kiss
175 Toyota Plaza, Suite 600
Memphis, Tennessee 38103
901-521-1440

Mechanical, Electrical & Plumbing Engineer
Circle Design Group
5510 South East Street, Suite F
Indianapolis, Indiana 46227
317-781-0200

Parking Consultant
Walker Parking Consultants
6602 East 75th Street, Suite 210
Indianapolis, Indiana 46250
317-842-0890

Civil Engineer/Landscape Architect
The Troyer Group
550 Union Street
Mishawaka, Indiana 46554
574-259-9976

100% Construction Documents
January 23, 2008

REVISION DATE	REVISION DESCRIPTION

CERTIFIED BY
JOSEPH M. PETRIE — REGISTERED — 10000000 — STATE OF — PROFESSIONAL ENGINEER

DESIGN DATE	DESIGN PROJECT NO.	DESIGN DRAWN BY	DESIGN CHK'D BY
01/23/08	07097	SVC	JMP

SHEET TITLE
CONCRETE COLUMN SCHEDULE, SECTIONS AND DETAILS

SHEET NO.
S300

POST-TENSIONED CONCRETE BEAM SCHEDULE

BEAM MARK	BEAM TYPE	SIZE WIDTH IN.	SIZE DEPTH IN.	MIN. EFFECTIVE PRE-STRESSING FORCE, KIPS	DISTANCE FROM BOTTOM OF BEAM TO ⌊ TENDON (IN.) A	B	C	REINFORCEMENT BOTTOM BARS NO.	SIZE	TYPE	REMARKS	REINFORCEMENT TOP BARS NO.	SIZE	TYPE	REMARKS	STIRRUPS SIZE	STIRRUPS TYPE A ⌊⌋ B ⌊⌋ 2'-0" LAP	STIRRUPS SPACING EACH END	REMARKS
B1	3	14	38	300	24.5	4.5	35	2 2 2	9 9 7	D E F		4 2 4	9 6 9	A B C		#4	B	102", 404", 406", 5@12" BAL. @ 18" EACH END	
B2	3	14	38	250	–	4.5	35	2 2	9 7	E F		2 4	6 9	B C		#4	B	102", 404", 406", 5@12" BAL. @ 18" EACH END	
B3	3	14	38	250	–	19	35	2 2	9 7	E F		2 4	6 9	B C		#4	B	102", 404", 406", 5@12" BAL. @ 18" EACH END	
B4	3	14	38	250	–	4.5	35	2 2	9 7	E F		2 4	6 9	B C		#4	B	102", 404", 406", 5@12" BAL. @ 18" EACH END	
B5	3	14	38	300	24.5	29.5	35	2 2	9 9	E D		2 4	6 9	B A		#4	B	102", 404", 406", 5@12" BAL. @ 18" EACH END	
B6	3	14	38	475	28.5	4.5	35	2 2 2	9 9 7	D E F		4 2 4	9 6 9	A B C		#4	A	102", 404", 406", 5@12" BAL. @ 18" EACH END	
B7	3	14	38	375	–	4.5	35	2 2	9 7	E F		2 4	6 9	B C		#4	A	102", 404", 406", 5@12" BAL. @ 18" EACH END	
B8	3	14	38	375	–	19	35	2 2	9 7	E F		2 4	6 9	B C		#4	A	102", 404", 406", 5@12" BAL. @ 18" EACH END	
B9	3	14	38	375	–	4.5	35	2 2	9 7	E F		2 4	6 9	B C		#4	A	102", 404", 406", 5@12" BAL. @ 18" EACH END	
B10	3	14	38	375	28.5	29.5	35	2 2	9 9	E D		2 4	6 9	B A		#4	A	102", 404", 406", 5@12" BAL. @ 18" EACH END	
B11	3	14	38	375	28.5	28	28.5	2 2	9 9	E D		2 4	6 9	B A		#4	A	102", 404", 406", 5@12" BAL. @ 18" EACH END	
B12	3	14	38	525	28.5	4.5	35	2 2 2	9 9 7	D E F		4 2 4	9 6 9	A B C		#4	A	102", 404", 406", 5@12" BAL. @ 18" EACH END	
B13	3	14	38	425	–	4.5	35	2 2	9 7	E F		2 4	6 9	B C		#4	A	102", 404", 406", 5@12" BAL. @ 18" EACH END	
B14	3	14	38	425	–	4.5	35	2 2	9 7	E F		2 4	6 9	B C		#4	A	102", 404", 406", 5@12" BAL. @ 18" EACH END	
B15	3	14	38	525	28.5	4.5	35	2 2	9 9	F D		2 4	6 9	B A		#4	A	102", 404", 406", 5@12" BAL. @ 18" EACH END	
B16	2	14	38	475	28.5	4.5	35	2 2 2	7 9 7	D E F		4 2 4	9 6 9	A B C		#4	A	102", 404", 406", 5@12" BAL. @ 18" EACH END	
B17	2	14	38	475	28.5	4.5	35	2 2	9 7	E D		2 4	6 9	B A		#4	A	102", 404", 406", 5@12" BAL. @ 18" EACH END	
B18	2	14	38	475	28.5	4.5	35	2 2 2	7 9 7	D E F		4 2 4	9 6 9	A B C		#4	A	102", 404", 406", 5@12" BAL. @ 18" EACH END	
B19	2	14	38	475	28.5	4.5	35	2 2	9 7	L D		2 4	6 9	B A		#4	A	102", 404", 406", 5@12" BAL. @ 18" EACH END	
B20	1	14	38	535	28.5	4.5	28.5	2 2 2	7 9 7	D E F		4 2 4	9 6 9	A B C		#4	A	102", 404", 406", 5@12" BAL. @ 18" EACH END	
B21	1	14	38	530	28.5	4.5	28.5	2 2 2	7 9 7	D E F		4 2 4	9 6 9	A B C		#4	A	102", 404", 406", 5@12" BAL. @ 18" EACH END	
B22	2	14	38	245	24.5	4.5	35	2 2	7 9 7	D E F		3 2 3	9 6 9	A B C		#4	B	102", 404", 406", 5@12" BAL. @ 18" EACH END	
B23	2	14	38	245	24.5	4.5	35	2 2	9 7	E D		2 3	6 9	B A		#4	B	102", 404", 406", 5@12" BAL. @ 18" EACH END	
B24	1	14	38	285	24.5	4.5	24.5	2 2 2	7 9 7	D E F		3 2 3	9 6 9	A B C		#4	B	102", 404", 406", 5@12" BAL. @ 18" EACH END	
B25	1	14	38	300	24.5	4.5	24.5	2 2 2	7 9 7	D E F		3 2 3	9 6 9	A B C		#4	B	102", 404", 406", 5@12" BAL. @ 18" EACH END	
B26	3	14	38	475	28.5	4.5	35	2 2 2	9 9 7	D E F		4 2 4	9 6 9	A B C		#4	A	102", 404", 406", 5@12" BAL. @ 18" EACH END	
B27	3	14	38	385	–	4.5	35	2 2	9 7	E F		2 4	6 9	B C		#4	A	102", 404", 406", 5@12" BAL. @ 18" EACH END	
B28	3	14	38	385	–	4.5	35	2 2	9 7	E F		2 4	6 9	B C		#4	A	102", 404", 406", 5@12" BAL. @ 18" EACH END	
B29	3	14	38	475	28.5	4.5	35	2 2	9 9	E D		2 4	6 9	B A		#4	A	102", 404", 406", 5@12" BAL. @ 18" EACH END	
B30	2	14	38	525	28.5	4.5	35	2 2 2	7 9 7	D E F		4 2 6	9 6 9	A B C	"C" BARS IN 2 LAYERS (4 + 2)	#4	A	102", 404", 406", 5@12" BAL. @ 18" EACH END	
B31	2	14	38	475	28.5	4.5	27	4 2	9 7	D E		2 4	6 9	B A		#4	A	102", 404", 406", 5@12" BAL. @ 18" EACH END	
B32	2	14	38	550	28.5	4.5	35	2 2 2	7 9 7	D E F		4 2 4	9 6 9	A B C		#4	A	102", 404", 406", 5@12" BAL. @ 18" EACH END	
B33	2	14	38	450	28.5	4.5	35	2 2	9 7	E D		2 4	6 9	B A		#4	A	102", 404", 406", 5@12" BAL. @ 18" EACH END	
B34	3	14	38	300	24.5	4.5	35	2 2 2	9 9 7	D E F		4 2 4	9 6 9	A B C		#4	B	102", 404", 406", 5@12" BAL. @ 18" EACH END	
B35	3	14	38	200	–	4.5	35	2 2	7 9	E F		2 4	6 9	B C		#4	B	102", 404", 406", 5@12" BAL. @ 18" EACH END	
B36	3	14	38	200	–	4.5	35	2 2	7 9	E F		2 4	6 9	B C		#4	B	102", 404", 406", 5@12" BAL. @ 18" EACH END	
B37	3	14	38	200	–	19	35	2 2	7 9	F F		2 4	6 9	B C		#4	B	102", 404", 406", 5@12" BAL. @ 18" EACH END	
B38	3	14	38	300	24.5	29.5	35	2 3	7 9	L D		2 4	6 9	B A		#4	B	102", 404", 406", 5@12" BAL. @ 18" EACH END	
B39	3	14	38	450	24.5	4.5	35	3 2 2	9 9 7	D E F		6 2 4	9 6 9	A B C		#4	B	102", 404", 406", 5@12" BAL. @ 18" EACH END	
B40	3	14	38	400	–	4.5	35	3 2	9 7	E F		2 4	6 9	B C		#4	B	102", 404", 406", 5@12" BAL. @ 18" EACH END	
B41	3	14	38	400	–	4.5	35	3 2	9 7	E F		2 4	6 9	B C		#4	B	102", 404", 406", 5@12" BAL. @ 18" EACH END	
B42	3	14	38	400	–	19	35	3 2	9 7	E F		2 4	6 9	B C		#4	B	102", 404", 406", 5@12" BAL. @ 18" EACH END	
B43	3	14	38	450	24.5	29.5	35	3 2	9 7	E F		2 6	6 9	B A		#4	B	102", 404", 406", 5@12" BAL. @ 18" EACH END	
B44	3	14	38	665	26	4.5	35	2 3 2	9 9 7	D E F		4 2 4	9 6 9	A B C		#4	A	102", 404", 406", 5@12" BAL. @ 10" EACH END	
B45	3	38	37	530	–	13.5	35	2 2	9 7	E F		2 4	6 9	B C		#4	A	102", 404", 406", 5@12" BAL. @ 10" EACH END	
B46	3	38	37	530	–	22.5	35	2 2	9 7	E F		2 4	6 9	B C		#4	A	102", 404", 406", 5@12" BAL. @ 10" EACH END	
B47	3	14	38	530	–	11	35	3 2	9 7	E F		2 4	6 9	B C		#4	A	102", 404", 406", 5@12" BAL. @ 12" EACH END	
B48	3	14	38	530	28.5	4.5	35	9 7	9 9	E D		2 4	6 9	B A		#4	A	102", 404", 406", 5@12" BAL. @ 12" EACH END	
B49	3	14	38	585	28.5	4.5	35	2 3 2	9 9 7	D E F		4 2 4	9 6 9	A B C		#4	A	102", 404", 406", 5@12" BAL. @ 12" EACH END	
B50	3	14	38	445	–	4.5	35	4 2	9 7	E F		2 7	6 9	B C		#4	A	102", 404", 406", 5@12" BAL. @ 12" EACH END	
B51	3	14	38	445	–	4.5	35	4 2	9 7	E F		2 6	9 9	B C		#4	A	102", 404", 406", 5@12" BAL. @ 12" EACH END	
B52	3	14	38	585	28.5	4.5	35	3 2	9 9	E D		2 4	6 9	B A		#4	A	102", 404", 406", 5@12" BAL. @ 12" EACH END	
B53	3	14	38	525	28.5	4.5	35	2 3 2	9 9 7	D E F		4 2 6	9 6 9	A B C		#4	A	102", 404", 406", 5@12" BAL. @ 12" EACH END	
B54	3	14	38	425	–	4.5	35	3 2	9 7	E F		2 4	6 9	B C		#4	A		
B55	3	14	38	425	–	18	35	2 2	9 7	E F		2 4	6 9	B C		#4	B		
B56	3	14	38	525	28.5	4.5	35	2 2	9 9	E D		2 4	6 9	B A		#4	A	102", 404", 406", 5@12" BAL. @ 12" EACH END	
B57	2	14	38	610	28.5	4.5	35	2 2 2	7 9 7	D E F		4 2 4	9 6 9	A B C		#4	A	102", 404", 406", 5@12" BAL. @ 12" EACH END	
B58	2	14	38	610	28.5	4.5	35	2 2	9 7	E D		2 4	6 9	B A		#4	A	102", 404", 406", 5@12" BAL. @ 12" EACH END	
B59	1	14	38	650	26	4.5	26	2 4 2	7 9 7	D E F		4 2 4	9 6 9	A B C		#4	A	102", 404", 406", 10@8" BAL. @ 12" EACH END	
B60	1	14	38	630	26	4.5	26	2 4 2	7 9 7	E D		4 2 4	9 6 9	A B C		#4	A	102", 404", 406", 10@8" BAL. @ 12" EACH END	
B61																			
B62																			
B63	2	14	38	285	24.5	4.5	35	2 2 2	7 9 7	D E F		4 2 4	9 6 9	A B C		#4	B	102", 404", 406", 5@12" BAL. @ 18" EACH END	
B64	2	14	38	285	24.5	4.5	35	2 2	9 7	E F		2 4	6 9	B A		#4	B	102", 404", 406", 5@12" BAL. @ 18" EACH END	
B65	1	14	38	315	24.5	4.5	24.5	2 2 2	7 9 7	D E F		4 2 4	9 6 9	A B C		#4	B	102", 404", 406", 5@12" BAL. @ 18" EACH END	
B66	1	14	38	370	24.5	4.5	24.5	2 2 2	7 9 7	D E F		4 2 4	9 6 9	A B C		#4	B	102", 404", 406", 5@12" BAL. @ 18" EACH END	

POST-TENSIONED CONCRETE BEAM SCHEDULE NOTES:

1. CONCRETE 28 DAY COMPRESSIVE STRENGTH:
   F'c = 5000 PSI / CLASS D CONCRETE (BASE BID)
   F'c = 5000 PSI / CLASS E CONCRETE (ALTERNATE NO. 3 / MICROSILICA CONCRETE)
   F'c = 5000 PSI / CLASS F CONCRETE (ALTERNATE NO. 4 / CORROSION INHIBITOR ADMIXTURE)
2. SEE TYPICAL DETAILS ON S302 SERIES DRAWINGS FOR DETAILING OF BEAM REINFORCEMENT.
3. WHERE TOP OR BOTTOM REINFORCEMENT IS IN MULTIPLE LAYERS PROVIDE #11 SPACER BARS AT 6'-0" SPACING. POSITION UPPER LAYER BARS DIRECTLY ABOVE BARS IN LAYER BELOW.
4. HORIZONTALLY ADJUST POSITION OF BEAM REINFORCEMENT AS REQUIRED TO AVOID INTERFERENCE WITH COLUMN VERTICAL REINFORCEMENT.
5. CONSTRUCTION JOINTS ARE NOT ALLOWED IN POST-TENSIONED BEAMS.
6. SEE DRAWING S002 FOR CONCRETE SCHEDULE AND GENERAL NOTES PERTAINING TO CONCRETE, POST-TENSIONED CONCRETE, AND REINFORCING STEEL.
7. SEE DETAIL H/S300 FOR REINFORCEMENT REQUIRED AT BEAM PT ANCHORS.
8. BEAMS SHALL BE READ FROM LEFT TO RIGHT FOR MILD REINFORCEMENT.
9. SHOP BEND ALL BEAM TOP REINFORCEMENT TO FOLLOW CHANGE IN BEAM ELEVATIONS.
10. PROVIDE ADDITIONAL STIRRUPS AT 4'-0" O.C. FOR ENTIRE BEAM LENGTH TO FACILITATE INSTALLATION OF #4 TENDON SUPPORT BARS.
11. SEE DETAIL A/S305 FOR ADDITIONAL REINFORCEMENT REQUIRED AROUND SLEEVED OPENINGS THROUGH BEAMS.
12. SEE DETAIL F/S302 FOR FORMWORK AND REINFORCEMENT DETAILING REQUIREMENTS FOR RAMP BEAMS.
13. SEE DETAIL G/S302 FOR FORMWORK REQUIREMENTS FOR BEAMS WITH DRAFTED FORMS.
14. SEE REINFORCING STEEL NOTE 14 ON DRAWING S002 FOR EPOXY-COATED REINFORCING STEEL REQUIREMENTS.
15. PROVIDE EFFECTIVE PRE-STRESS OF 175 PSI AT MID-DEPTH OF ALL BEAMS ON COLUMN LINES A & E UNLESS NOTED OTHERWISE IN SCHEDULE.

BAR SIZE	F'c = 5000 PSI TYPE I	TYPE II	TYPE III
#3	12	16	17
#4	13	17	23
#5	16	21	28
#6	20	26	33
#7	23	34	38
#8	27	42	46
#9	34	52	59
#10	44	64	73
#11	53	76	90

NOTE:
LAP SPLICE LENGTHS ARE IN INCHES.

TABLE 1
TENSION LAP SPLICES
BEAM REINFORCEMENT

FINK ROBERTS & PETRIE, INC.
Consulting Engineers
4040 Vincennes Circle Suite 300
Indianapolis, Indiana 46268

Eddy Street Commons
Phase II
Parking Garage
Project Number 108-004

Owner
City of South Bend, Indiana

Construction Manager
Kite Realty Group
30 South Meridian Street, Suite 1100
Indianapolis, Indiana 46204
317-577-5600

Structural Engineer
Fink, Roberts & Petrie, Inc.
4040 Vincennes Circle, Suite 300
Indianapolis, Indiana 46268
317-872-8400

Architect
Looney Ricks Kiss
175 Toyota Plaza, Suite 600
Memphis, Tennessee 38103
901-521-1440

Mechanical, Electrical & Plumbing Engineer
Circle Design Group
5510 South East Street, Suite F
Indianapolis, Indiana 46227
317-781-6200

Parking Consultant
Walker Parking Consultants
6602 East 75th Street, Suite 210
Indianapolis, Indiana 46250
317-842-6800

Civil Engineer/Landscape Architect
The Troyer Group
530 Union Street
Mishawaka, Indiana 46554
574-259-9976

100% Construction Documents
January 23, 2008

REVISION DESCRIPTION

REVISION DATE

CERTIFIED BY

JAMES M. PETRIE, JR. REGISTERED PE10100032 STATE OF INDIANA PROFESSIONAL ENGINEER

ISSUE DATE	ISSUE/PROJECT NO.	DESIGNED BY	DRAWN BY	CHECKED BY	
01/23/08	07097	SMC	SMC	JMP	

SHEET TITLE
POST-TENSIONED BEAM SCHEDULE

SHEET NO.
S301

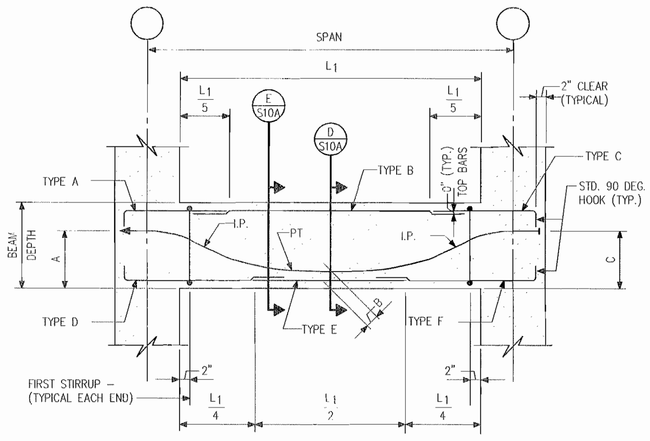

TYPICAL POST–TENSIONED BEAM TYPE 1 (A S302)

NOTES:

1. I.P. = INFLECTION POINT LOCATED AT 1/12 OF THE SPAN FROM CENTERLINE OF COLUMN, WHERE THE SPAN IS THE DISTANCE FROM CENTER TO CENTER OF SUPPORTS.
2. PT = CENTROID OF POST–TENSIONING TENDON PARABOLIC PROFILE.
3. LAP SPLICES: TOP REINF. – 1'–6"
   BOTT. REINF.– TYPE II

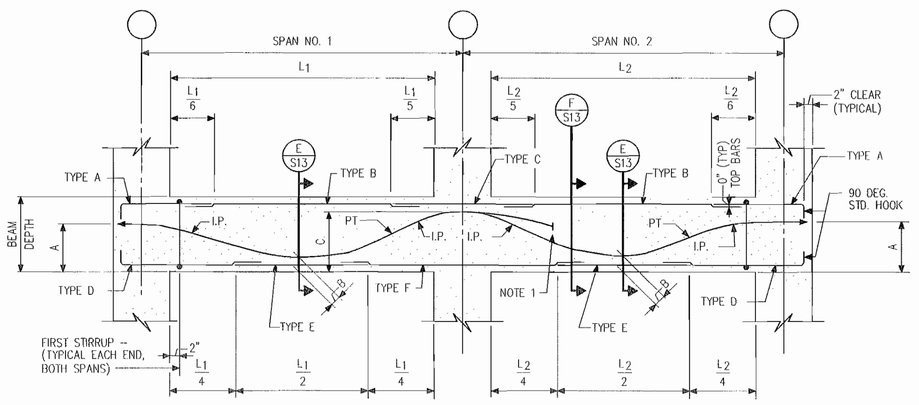

TYPICAL POST–TENSIONED BEAM TYPE 2 (B S302)

NOTES:

1. TENDON DEAD ENDS FOR "ADD TENDONS" SHALL BE LOCATED AT BEAM MID–DEPTH AND SHALL EXTEND 1/4 SPAN LENGTH INTO ADJACENT SPAN.
2. I.P.= INFLECTION POINT LOCATED AT 1/12 OF SPAN FROM CENTERLINE OF COLUMN, WHERE THE SPAN IS THE DISTANCE CENTER TO CENTER OF SUPPORTS.
3. PT = CENTROID OF POST–TENSIONING TENDON PARABOLIC PROFILE.
4. LAP SPLICES: TOP REINF. – 1'–6"
   BOTT. REINF.– TYPE II

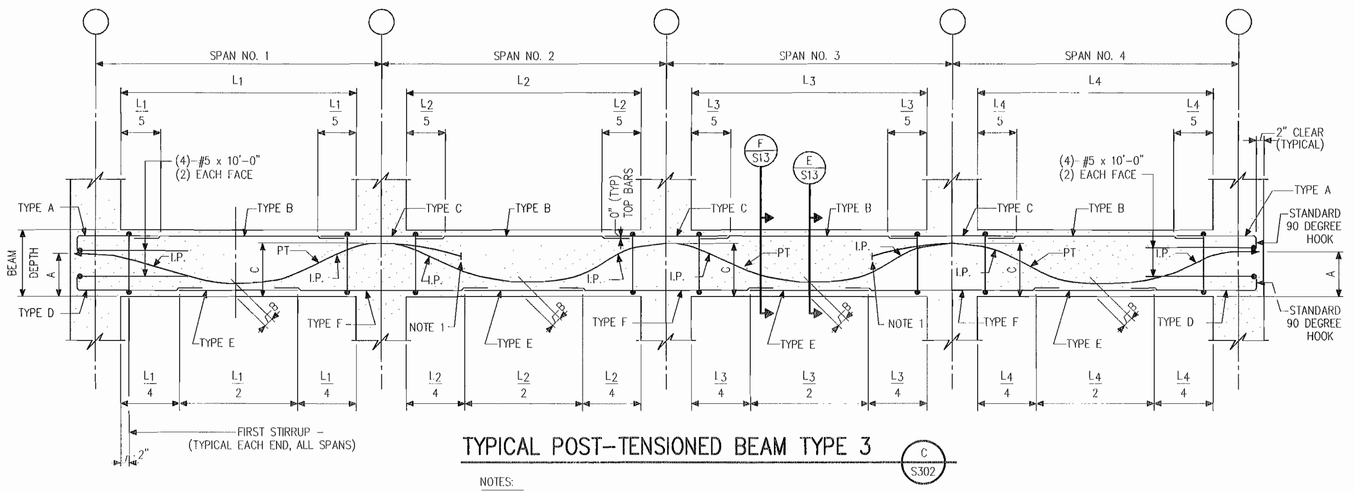

TYPICAL POST–TENSIONED BEAM TYPE 3 (C S302)

NOTES:

1. TENDON DEAD ENDS FOR "ADD TENDONS" SHALL BE LOCATED AT BEAM MID–DEPTH AND SHALL EXTEND 1/4 SPAN LENGTH INTO ADJACENT SPAN.
2. I.P.= INFLECTION POINT LOCATED AT 1/12 OF SPAN FROM CENTERLINE OF COLUMN, WHERE THE SPAN IS THE DISTANCE CENTER TO CENTER OF SUPPORTS.
3. PT = CENTROID OF POST–TENSIONING TENDON PARABOLIC PROFILE.
4. LAP SPLICES: TOP REINF. – 1'–6"
   BOTT. REINF.– TYPE II

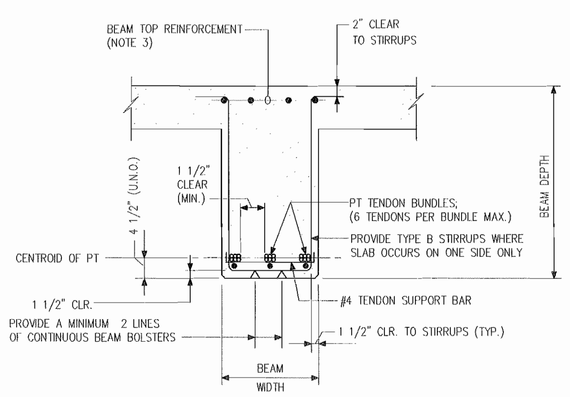

TYPICAL POST–TENSIONED BEAM REINFORCEMENT DETAIL (D S302)

NOTES:

1. SEE BEAM SCHEDULE FOR BEAM SIZE.
2. AT DISCONTINUOUS ENDS OF BEAMS, PLACE BEAM HOOKED TOP REINFORCEMENT AS SHOWN. AT CONTINUOUS ENDS OF BEAMS, PLACE BEAM TOP REINFORCEMENT OUTSIDE STIRRUP AND TIE BARS TO UNDERNEATH SIDE OF SLAB TOP REINFORCEMENT.

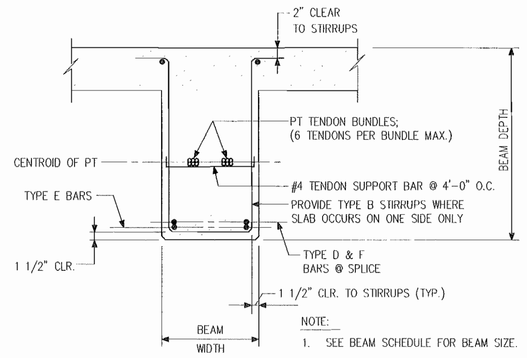

TYPICAL POST–TENSIONED BEAM REINFORCEMENT DETAIL (E S302)

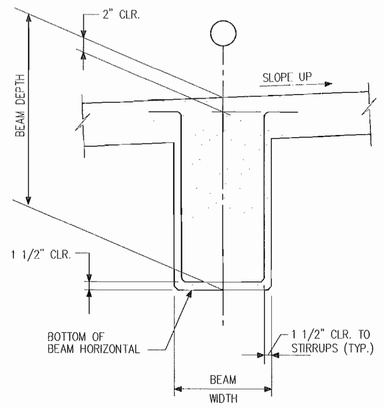

NOTE:

1. FOR PLACEMENT OF REINFORCEMENT SEE DETAILS D/S10A & E/S10A.

TYPICAL POST–TENSIONED BEAM DETAIL AT RAMP (F S302)

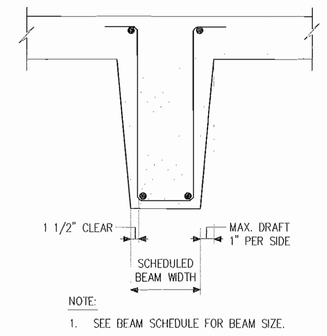

NOTE:

1. SEE BEAM SCHEDULE FOR BEAM SIZE.

TYPICAL POST–TENSIONED BEAM WITH DRAFTED FORM (G S302)

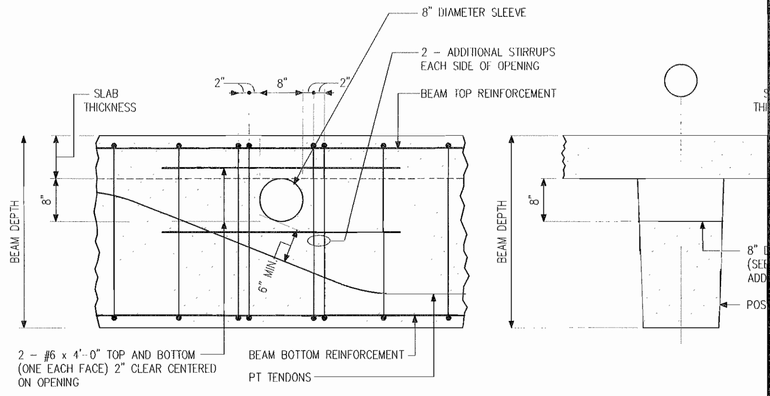

TYPICAL POST–TENSIONED BEAM SLEEVE DETAIL (H S302)

FINK ROBERTS & PETRIE, INC.
Consulting Engineers
Indianapolis, Indiana 46226

Eddy Street Commons
Phase II
Parking Garage
Project Number 108-004

Owner
City of South Bend, Indiana

Construction Manager
Kite Realty Group
30 South Meridian Street, Suite 1100
Indianapolis, Indiana 46204
317-577-5600

Structural Engineer
Fink, Roberts & Petrie, Inc.
4040 Vincennes Circle, Suite 300
Indianapolis, Indiana 46268
317-872-8400

Architect
Looney Ricks Kiss
175 Toyota Plaza, Suite 600
Memphis, Tennessee 38103
901-521-1440

Mechanical, Electrical & Plumbing Engineer
Circle Design Group
5510 South East Street, Suite F
Indianapolis, Indiana 46227
317-781-0200

Parking Consultant
Walker Parking Consultants
6602 East 75th Street, Suite 310
Indianapolis, Indiana 46250
317-842-6890

Civil Engineer/Landscape Architect
The Troyer Group
550 Union Street
Mishawaka, Indiana 46554
574-259-9976

100% Construction Documents
January 23, 2008

REVISION DATE
REVISION DESCRIPTION

CERTIFIED BY

ISSUE DATE: 01/23/08
ISSUE PROJECT NO: 07097
DESIGN DRAWN BY: SVC
CHECKED BY: JMP

SHEET TITLE
POST-TENSIONED SECTIONS AND DETAILS

SHEET NO.
S302

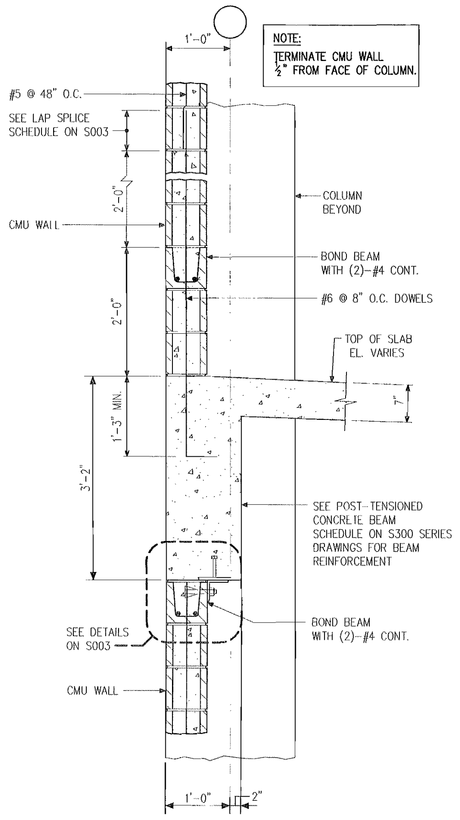

SECTION 1
3/4" = 1'-0"
S102 S103 S104 S105

NOTES:
1. CMU WALL DOWELS MUST BE PLACED AND SECURED PRIOR TO CONCRETE PLACEMENT. DRILLED-IN DOWELS ARE NOT PERMITTED.

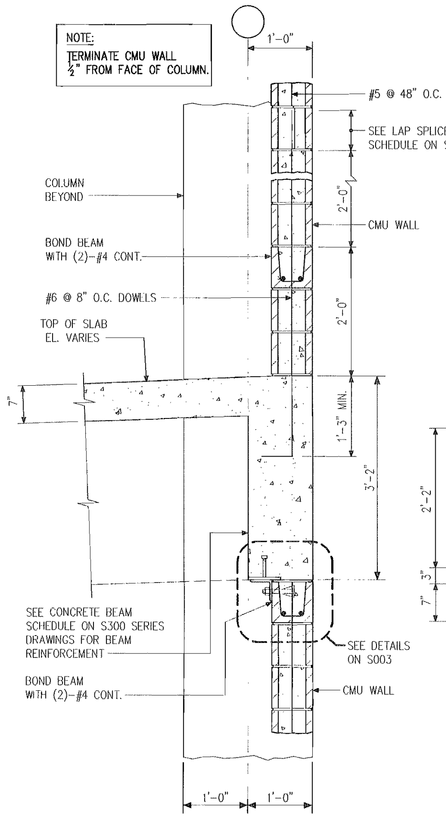

SECTION 2
3/4" = 1'-0"
S102 S103 S104 S105

NOTES:
1. CMU WALL DOWELS MUST BE PLACED AND SECURED PRIOR TO CONCRETE PLACEMENT. DRILLED-IN DOWELS ARE NOT PERMITTED.

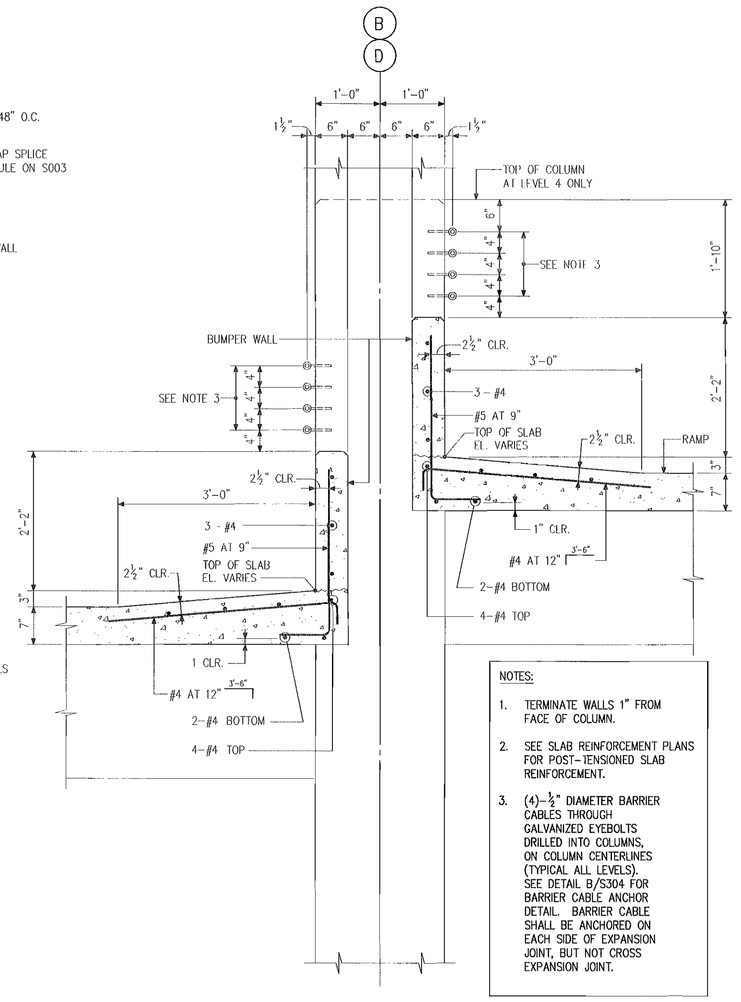

TYPICAL SECTION AT RAMP
3/4" = 1'-0"
S102 S103 S104 S105

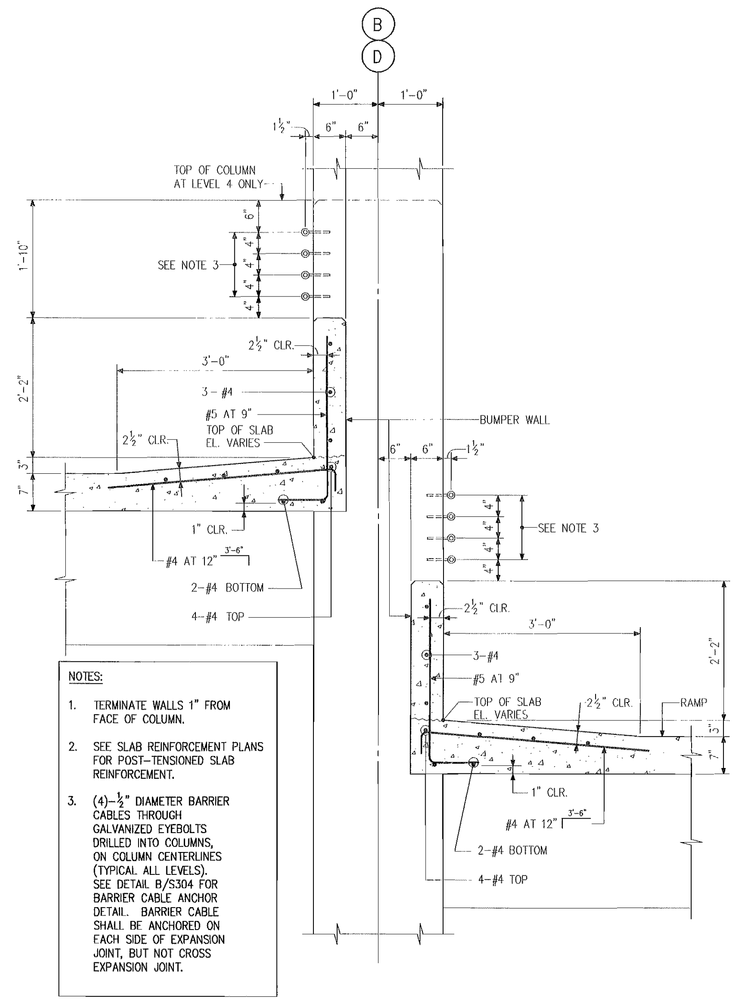

TYPICAL SECTION AT RAMP
3/4" = 1'-0"
S102 S103 S104 S105

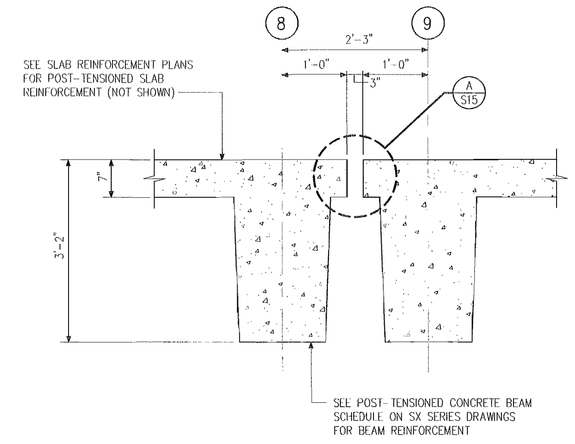

TYPICAL EXPANSION/SEISMIC JOINT DETAIL
3/4" = 1'-0"
S102 S103 S104 S105

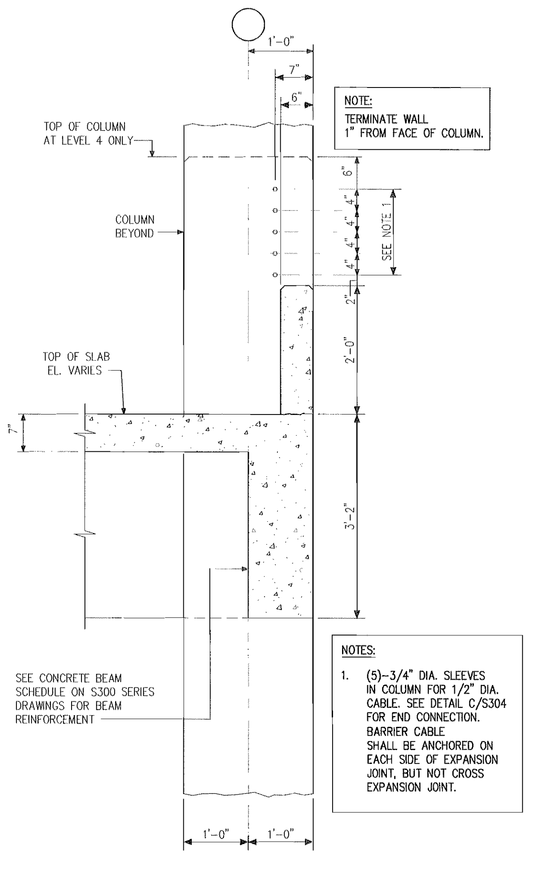

SECTION 7
3/4" = 1'-0"
S102 S103 S104 S105

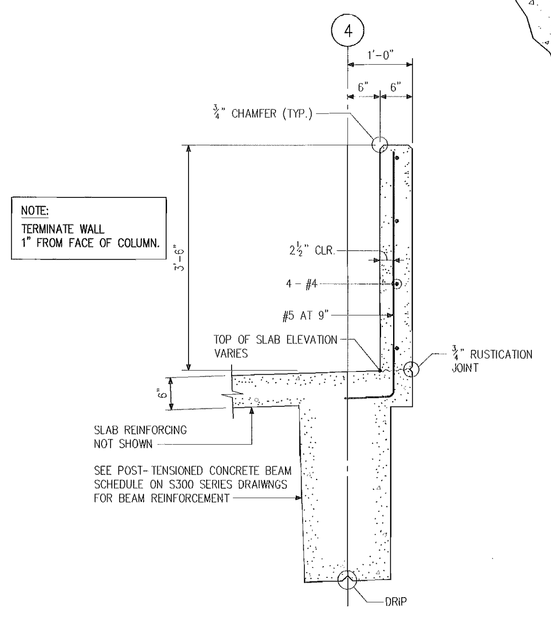

SECTION 8
3/4" = 1'-0"
S105

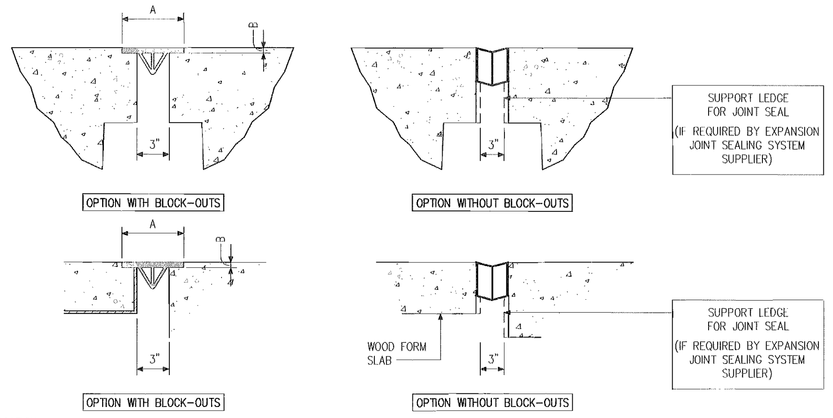

NOTES:
1. BLOCK-OUT DIMENSIONS "A" AND "B" PER EXPANSION JOINT SEALING SYSTEM MANUFACTURER. SEE SECTION 07100, DECK WATERPROOFING, ARTICLE 2.2 OF THE PROJECT MANUAL.
2. FOR DETAIL WITHOUT BLOCK-OUTS, DO NOT CHAMFER CONCRETE. SEE SECTION 07100, DECK WATERPROOFING, ARTICLE 2.2 OF THE PROJECT MANUAL.
3. JOINT WIDTH SHALL BE FORMED AS DIMENSIONED. HOWEVER, EXPANSION JOINT SEALING SYSTEM SUPPLIER SHALL ACCOUNT FOR ACTUAL JOINT WIDTH AT TIME OF INSTALLATION DUE TO CREEP, SHRINKAGE, AND TEMPERATURE VARIATIONS.
4. INSTALL EXPANSION JOINT SEALING SYSTEM A MINIMUM OF (30) DAYS AFTER CONCRETE HAS BEEN PLACED ON EACH SIDE OF JOINT.
5. EXPANSION JOINT SEALING SYSTEM MOVEMENT REQUIREMENTS:

EXTENSION	=	1½" AT EXPANSION/SEISMIC JOINTS
COMPRESSION	=	¾" AT EXPANSION/SEISMIC JOINTS
MAXIMUM JOINT OPENING	=	4½" AT EXPANSION/SEISMIC JOINTS

TYPICAL EXPANSION/SEISMIC JOINT DETAIL
S304

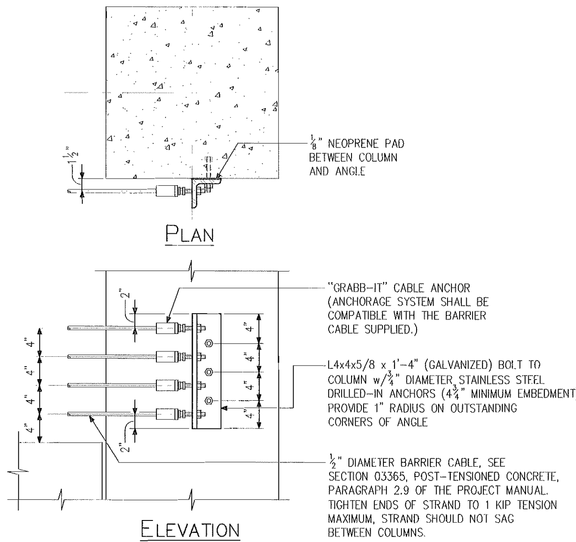

TYPICAL BARRIER CABLE ANCHOR DETAIL
1" = 1'-0"
S304

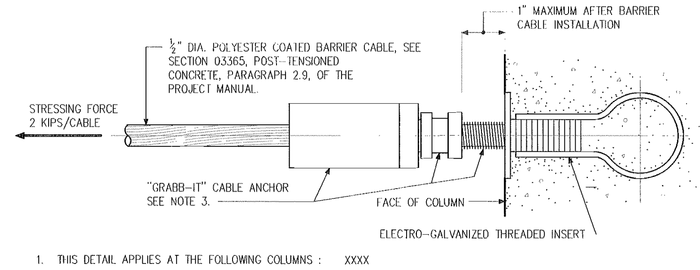

1. THIS DETAIL APPLIES AT THE FOLLOWING COLUMNS : XXXX
2. THREADED INSERT AND CABLE ANCHOR SHALL BE PROVIDED TO RESIST THE DESIGN FORCE INDICATED WITH A MINIMUM 2 : 1 SAFETY FACTOR . SUBMIT PRODUCT INFORMATION FOR INSERT , CABLE ANCHOR AND BARRIER CABLE.
3. ANCHORAGE SYSTEM SHALL BE COMPATIBLE WITH THE BARRIER CABLE SUPPLIED.

DETAIL
SCALE : HALF SIZE
S304

FINK ROBERTS & PETRIE, INC.
Consulting Engineers
Indianapolis, Indiana 46268

Eddy Street Commons
Phase II
Parking Garage
Project Number 108-004

Owner
City of South Bend, Indiana

Construction Manager
Kite Realty Group
30 South Meridian Street, Suite 1100
Indianapolis, Indiana 46204
317-577-5600

Structural Engineer
Fink, Roberts & Petrie, Inc.
4040 Vincennes Circle, Suite 300
Indianapolis, Indiana 46268
317-872-8400

Architect
Looney Ricks Kiss
175 Toyota Plaza, Suite 600
Memphis, Tennessee 38103
901-521-1440

Mechanical, Electrical & Plumbing Engineer
Circle Design Group
5510 South East Street, Suite F
Indianapolis, Indiana 46227
317-784-0200

Parking Consultant
Walker Parking Consultants
6602 East 75th Street, Suite 210
Indianapolis, Indiana 46250
317-842-6890

Civil Engineer/Landscape Architect
The Troyer Group
550 Union Street
Mishawaka, Indiana 46554
574-259-9976

100% Construction Documents
January 23, 2008

REVISION DESCRIPTION

REVISION DATE

CERTIFIED BY

DESIGN DATE 01/23/08
DESIGN PROJECT NO 07097
DESIGN DRAWN BY SVC
CHECKED BY JMP

SHEET TITLE
POST-TENSION SECTIONS AND DETAILS

SHEET NO.
S304

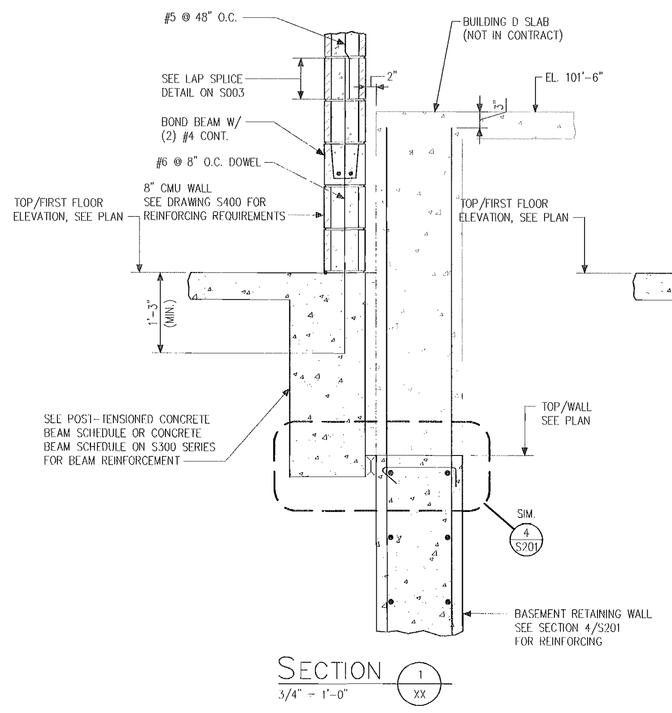

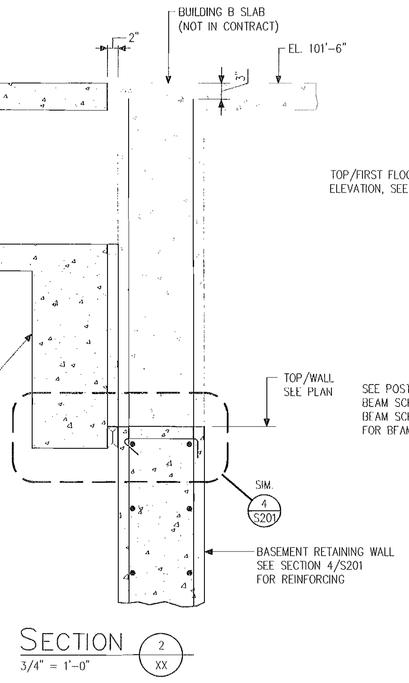

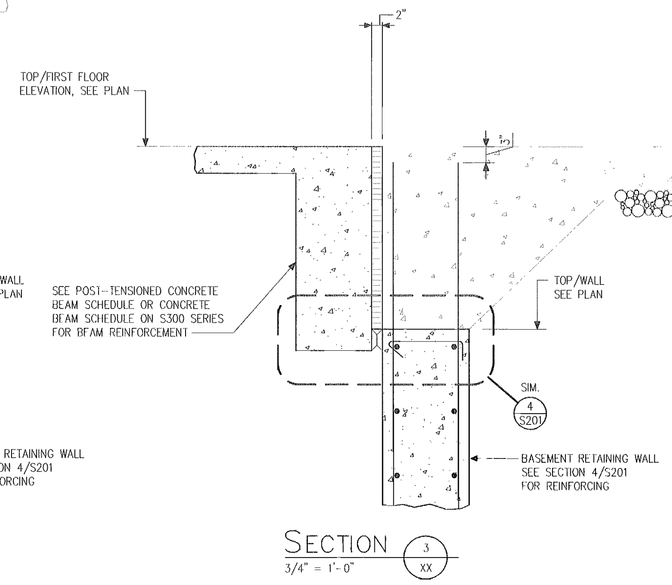

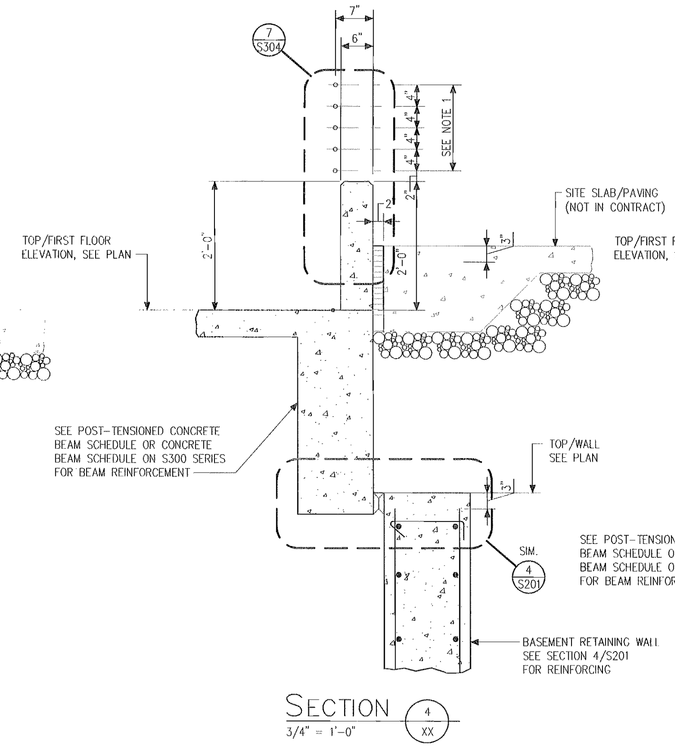

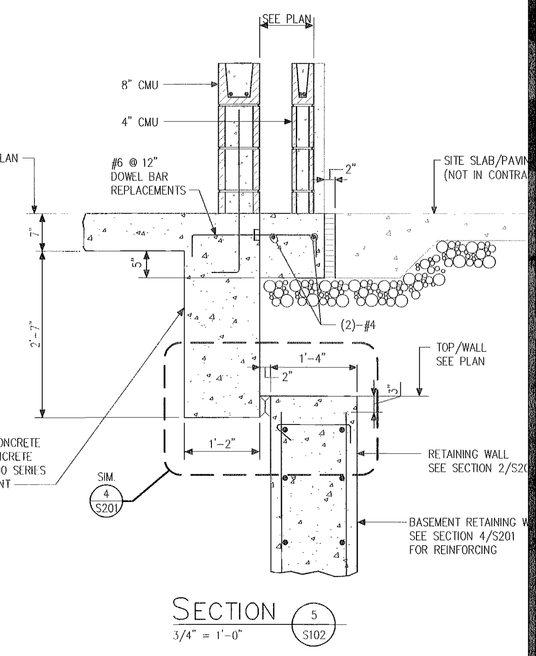

FINK ROBERTS & PETRIE, INC.
Consulting Engineers
4040 Vincennes Circle, Suite 300
Indianapolis, Indiana 46268
317-872-8400 FAX 317-872-8448

Eddy Street Commons
Phase II
Parking Garage
Project Number 108-004

Owner
City of South Bend, Indiana

Construction Manager
Kite Realty Group
30 South Meridian Street, Suite 1100
Indianapolis, Indiana 46204
317-577-5600

Structural Engineer
Fink, Roberts & Petrie, Inc.
4040 Vincennes Circle, Suite 300
Indianapolis, Indiana 46268
317-872-8400

Architect
Looney Ricks Kiss
175 Toyota Plaza, Suite 600
Memphis, Tennessee 38103
901-521-1440

Mechanical, Electrical & Plumbing Engineer
Circle Design Group
5510 South East Street, Suite F
Indianapolis, Indiana 46227
317-781-0200

Parking Consultant
Walker Parking Consultants
6002 East 75th Street, Suite 310
Indianapolis, Indiana 46250
317-842-6890

Civil Engineer/Lanscape Architect
The Troyer Group
550 Union Street
Mishawaka, Indiana 46554
574-259-9976

100% Construction Documents
January 23, 2008

REVISION DATE	REVISION DESCRIPTION

CERTIFIED BY

DESIGN DATE	DRAWN BY
01/23/08	SVC
PROJECT NUMBER	DESIGN BY
07097	SVC
	CHECKED BY
	JMP

SHEET TITLE
SECTIONS AND DETAILS

SHEET NO.
S305

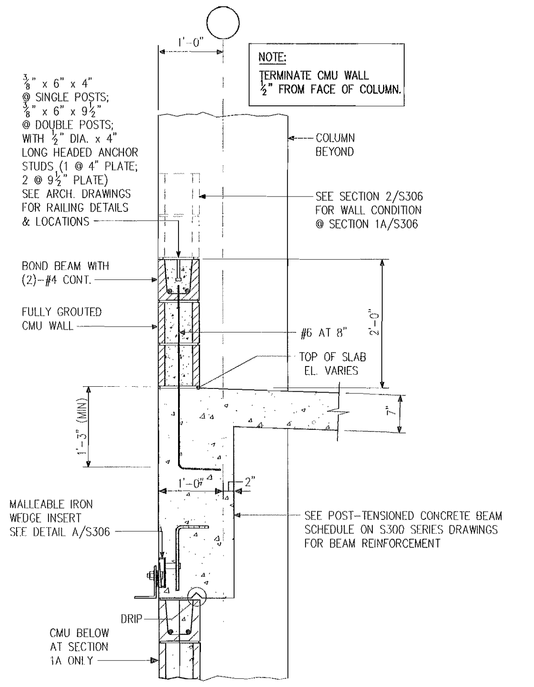

SECTION 1 1A
3/4" = 1'-0"
S102
S103
S104
S105

NOTES:

1. CMU WALL DOWELS MUST BE PLACED AND SECURED PRIOR TO CONCRETE PLACEMENT. DRILLED-IN DOWELS ARE NOT PERMITTED.

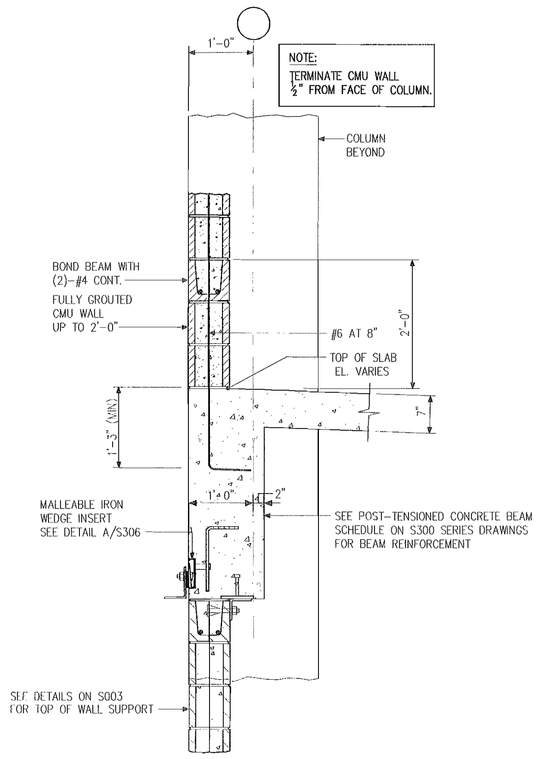

SECTION 2
3/4" = 1'-0"
S102
S103
S104
S105

NOTES:

1. CMU WALL DOWELS MUST BE PLACED AND SECURED PRIOR TO CONCRETE PLACEMENT. DRILLED-IN DOWELS ARE NOT PERMITTED.

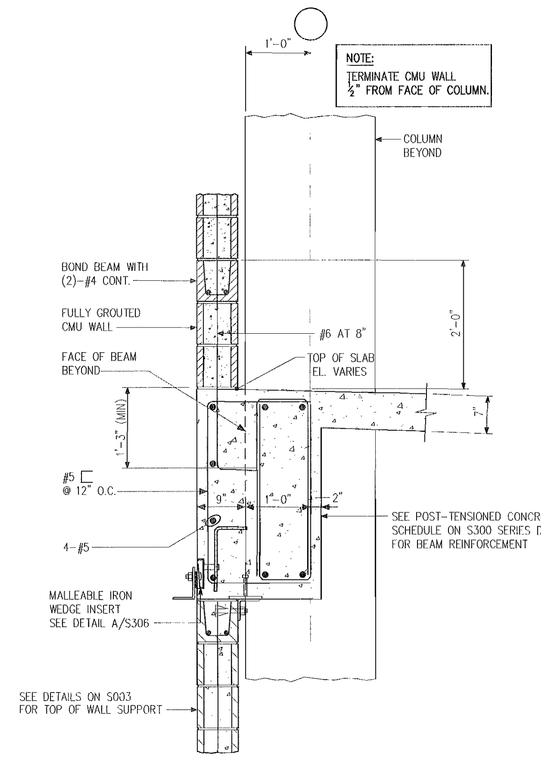

SECTION 3
3/4" = 1'-0"
S102
S103
S104
S105

NOTES:

1. CMU WALL DOWELS MUST BE PLACED AND SECURED PRIOR TO CONCRETE PLACEMENT. DRILLED-IN DOWELS ARE NOT PERMITTED.

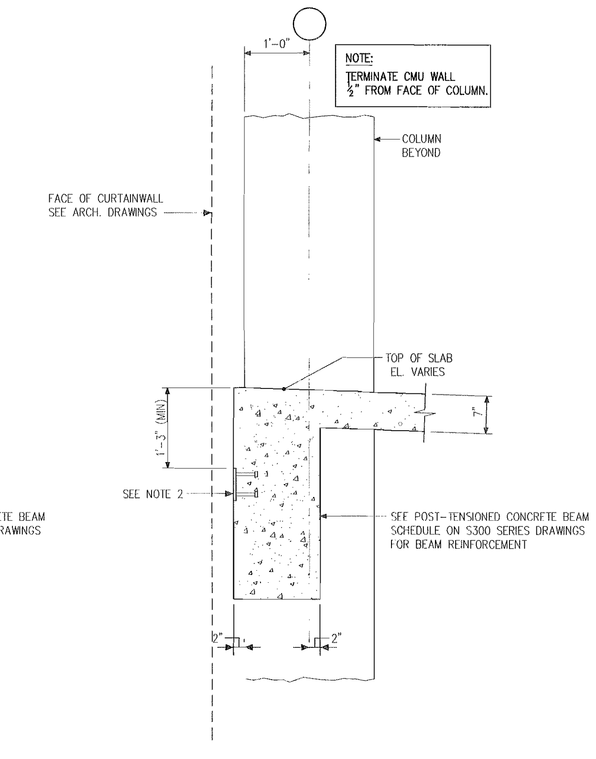

SECTION 4
3/4" = 1'-0"
S102
S103
S104
S105

NOTES:

1. CMU WALL DOWELS MUST BE PLACED AND SECURED PRIOR TO CONCRETE PLACEMENT. DRILLED-IN DOWELS ARE NOT PERMITTED.
2. COORDINATE EMBEDDED ITEMS FOR ATTACHMENT OF CURTAINWALL WITH CURTAINWALL SUPPLIER.

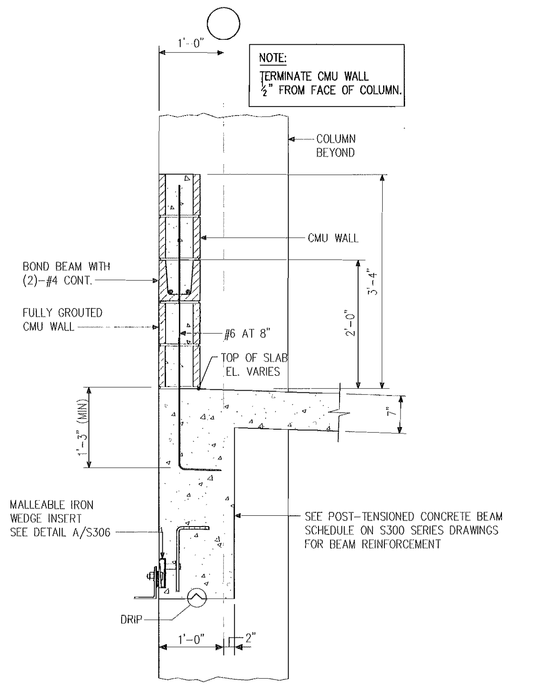

SECTION 5
3/4" = 1'-0"
S102
S103
S104
S105

NOTES:

1. CMU WALL DOWELS MUST BE PLACED AND SECURED PRIOR TO CONCRETE PLACEMENT. DRILLED-IN DOWELS ARE NOT PERMITTED.

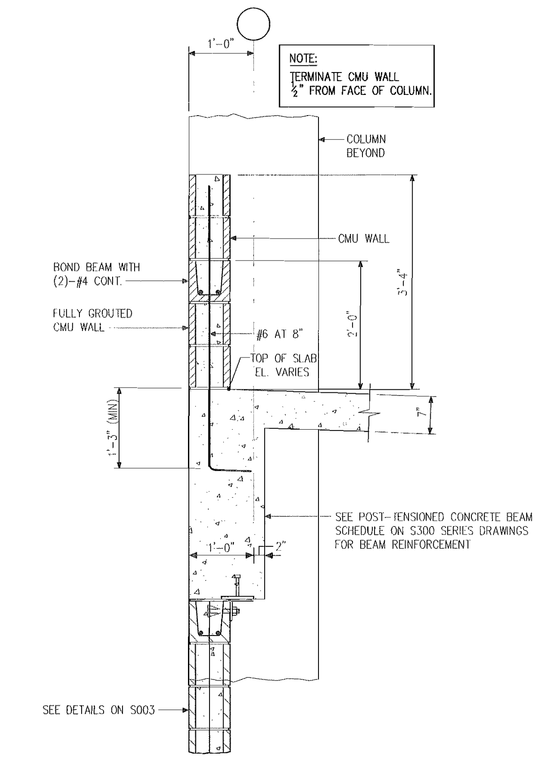

SECTION 6
3/4" = 1'-0"
S102
S103
S104
S105

NOTES:

1. CMU WALL DOWELS MUST BE PLACED AND SECURED PRIOR TO CONCRETE PLACEMENT. DRILLED-IN DOWELS ARE NOT PERMITTED.

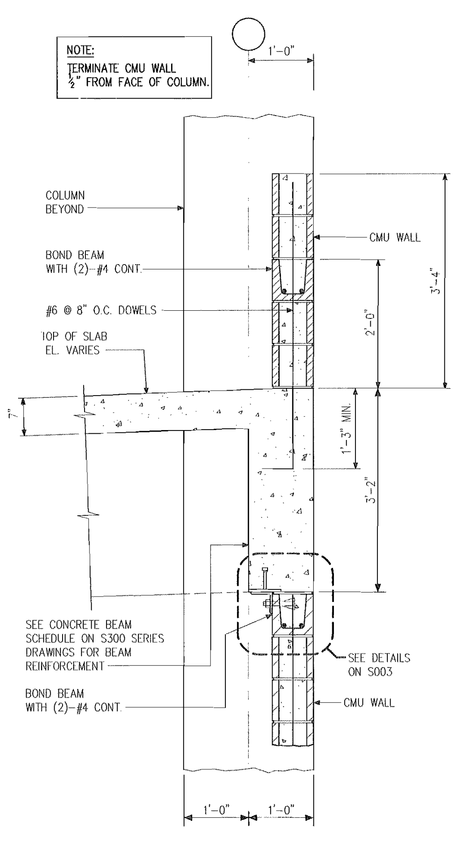

SECTION 7
3/4" = 1'-0"
S102
S103
S104
S105

NOTES:

1. CMU WALL DOWELS MUST BE PLACED AND SECURED PRIOR TO CONCRETE PLACEMENT. DRILLED-IN DOWELS ARE NOT PERMITTED.

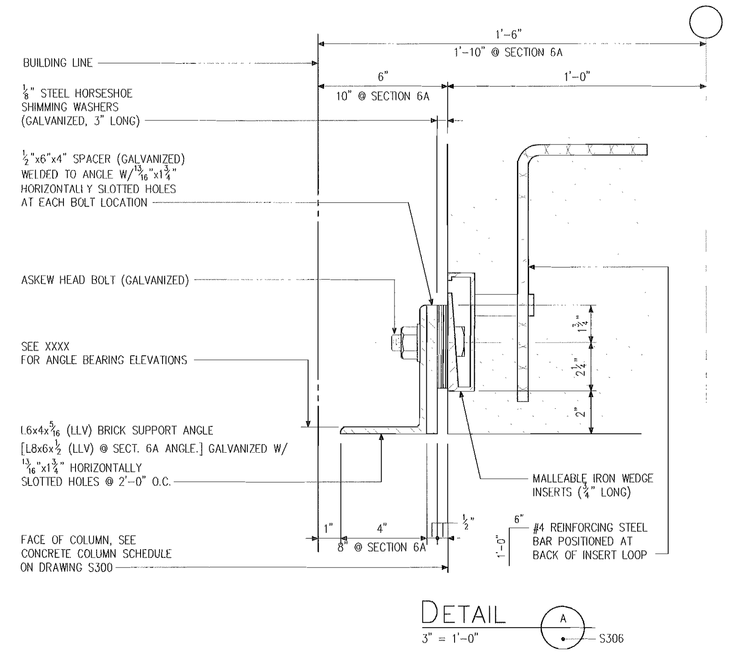

DETAIL A
3" = 1'-0"
S306

FINK ROBERTS & PETRIE, INC.
Consulting Engineers
Indianapolis, Indiana 46268

Eddy Street Commons
Phase II
Parking Garage
Project Number 108-004

Owner
City of South Bend, Indiana

Construction Manager
Kite Realty Group
30 South Meridian Street, Suite 1100
Indianapolis, Indiana 46204
317-577-5600

Structural Engineer
Fink, Roberts & Petrie, Inc.
4040 Vincennes Circle, Suite 300
Indianapolis, Indiana 46268
317-872-8400

Architect
Looney Ricks Kiss
175 Toyota Plaza, Suite 600
Memphis, Tennessee 38103
901-521-1440

Mechanical, Electrical & Plumbing Engineer
Circle Design Group
5510 South East Street, Suite F
Indianapolis, Indiana 46227
317-781-0200

Parking Consultant
Walker Parking Consultants
6600 East 75th Street, Suite 310
Indianapolis, Indiana 46250
317-842-6890

Civil Engineer/Landscape Architect
The Troyer Group
550 Union Street
Mishawaka, Indiana 46554
574-259-9976

100% Construction
Documents
January 23, 2008

REVISION DATE | REVISION DESCRIPTION

CERTIFIED BY

DESIGN DATE: 01/23/08
DESIGN PROJECT NO: 07097
DESIGN DRAWN BY: SVC
CHECKED BY: JMP

SHEET TITLE
POST-TENSION SECTIONS
AND DETAILS

SHEET NO.
S306

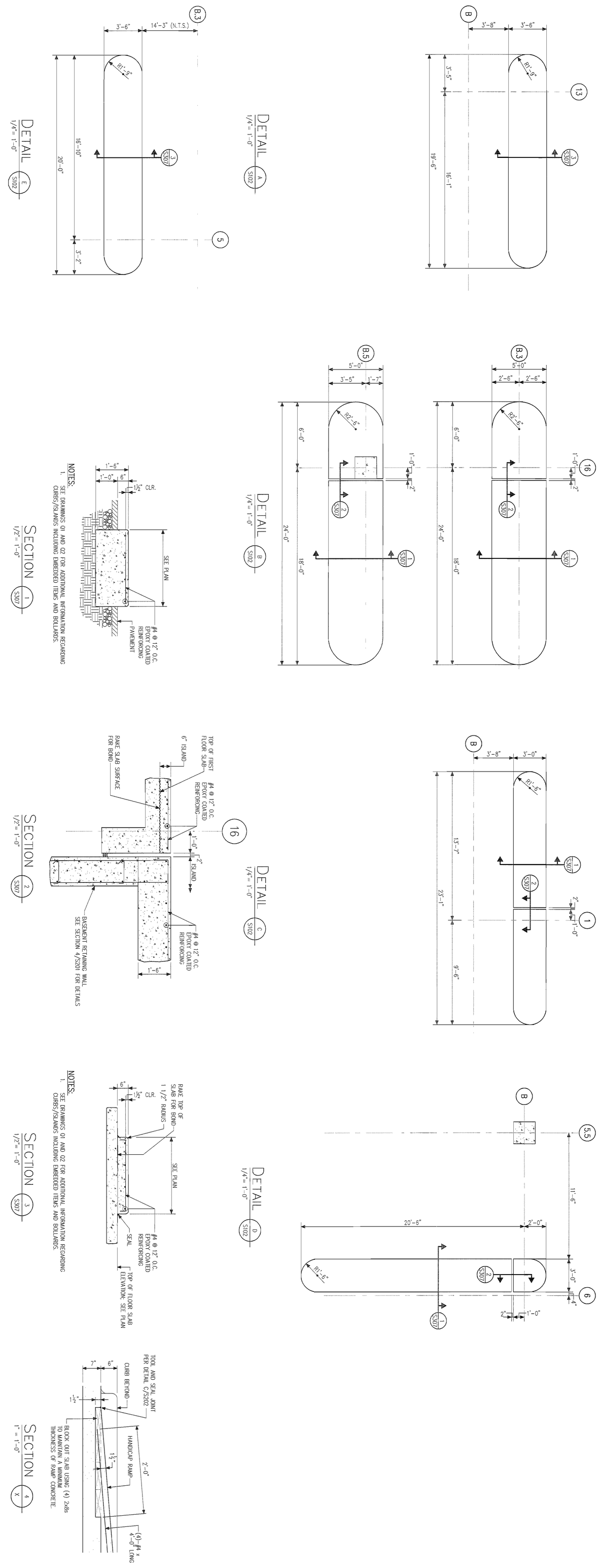

SHEET NO.	SHEET TITLE	DESIGN DATE	CERTIFIED BY	REVISION DATE	REVISION DESCRIPTION
S307	SECTIONS AND DETAILS	01/23/08 DESIGN PROJECT NO. 07097 DESIGN DRAWN BY SVC CHECKED BY JMP	JOSEPH M. PETROLIA REGISTERED PE10100203 STATE OF INDIANA PROFESSIONAL ENGINEER		

100% Construction Documents
January 23, 2008

Eddy Street Commons
Phase II
Parking Garage
Project Number 108-004

Owner
City of South Bend, Indiana

Construction Manager
Kite Realty Group
30 South Meridian Street, Suite 1100
Indianapolis, Indiana 46204
317-577-5600

Structural Engineer
Fink, Roberts & Petrie, Inc.
4040 Vincennes Circle, Suite 300
Indianapolis, Indiana 46268
317-872-8400

Architect
Looney Ricks Kiss
175 Toyota Plaza, Suite 600
Memphis, Tennessee 38103
901-521-1440

Mechanical, Electrical & Plumbing Engineer
Circle Design Group
5510 South East Street, Suite F
Indianapolis, Indiana 46227
317-781-6200

Parking Consultant
Walker Parking Consultants
6602 East 75th Street, Suite 210
Indianapolis, Indiana 46250
317-842-6890

Civil Engineer/Landscape Architect
The Troyer Group
550 Union Street
Mishawaka, Indiana 46554
574-259-9976

FINK ROBERTS & PETRIE, INC.
Consulting Engineers
4040 Vincennes Circle Suite 300
Indianapolis, Indiana 46268

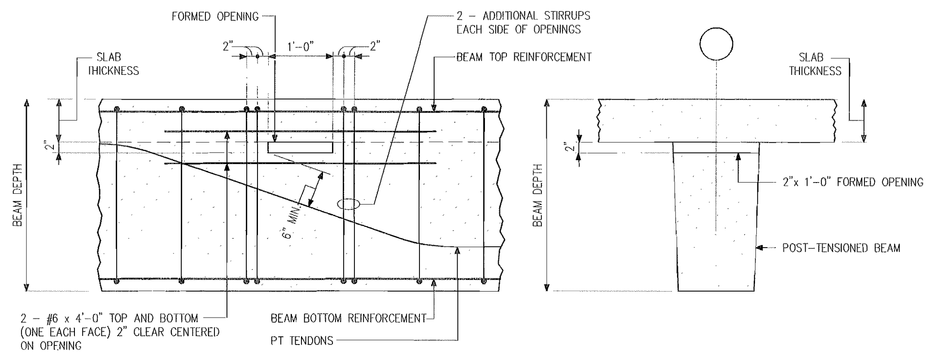

TYPICAL POST-TENSIONED BEAM BLOCKOUT DETAIL

A — S102, S103, S104, S105

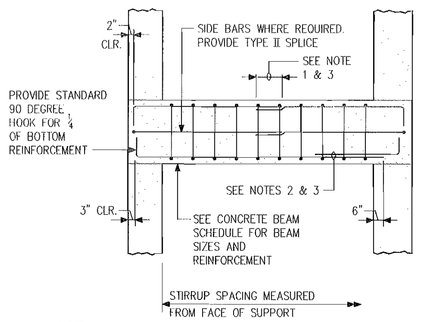

NOTE:

1. PROVIDE TYPE III LAP SPLICE FOR ALL TOP BARS. POSITION THE SPLICED BARS ONE ON TOP OF THE OTHER, NOT SIDE BY SIDE. SEE LAP SPLICE SCHEDULE ON DRAWING S301.
2. PROVIDE TYPE I LAP SPLICE FOR ALL BOTTOM BARS. POSITION THE SPLICED BARS ONE ON TOP OF THE OTHER, NOT SIDE BY SIDE. SEE LAP SPLICE SCHEDULE ON DRAWING S301.
3. TO FACILITATE INSTALLATION OF REINFORCING, DO NOT PROVIDE BARS WITH HOOKS AT BOTH ENDS. INSTEAD PROVIDE TWO BARS, EACH WITH A HOOK AT ONE END. SPLICE TOP AND SIDE BARS AT MIDSPAN AND BOTTOM BARS AT THE SUPPORT.

TYPICAL SINGLE-SPAN BEAM REINFORCEMENT

B — S305

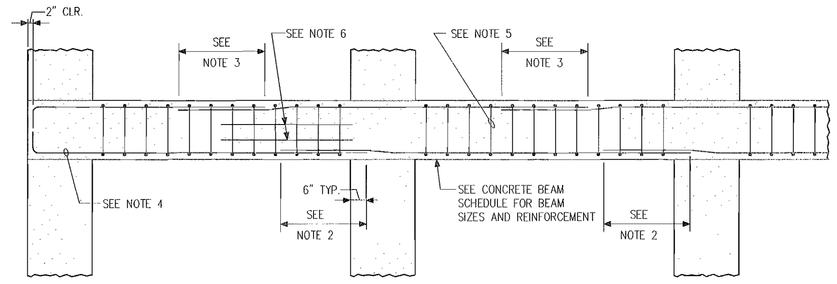

NOTES:

1. SEE DETAIL B/S305 (TYPICAL SINGLE-SPAN BEAM REINFORCEMENT) FOR ADDITIONAL INFORMATION REGARDING DETAILING OF BEAM REINFORCEMENT.
2. EXTEND ONE-FOURTH OF BOTTOM REINFORCEMENT (OR TWO BARS MINIMUM IN CORNERS OF STIRRUPS) THRU COLUMN AND SPLICE WITH TYPE II TENSION LAP SPLICES (SEE TABLE ON S301). POSITION THE SPLICED BARS ONE ON TOP OF THE OTHER, NOT SIDE BY SIDE. EXTEND REMAINDER OF BOTTOM REINFORCEMENT 6" INTO SUPPORT.
3. EXTEND ONE-HALF OF TOP REINFORCEMENT (OR FOUR BARS MAXIMUM) TO MIDSPAN AND SPLICE WITH TYPE III TENSION LAP SPLICES (SEE TABLE ON S301). POSITION THE SPLICED BARS ONE ON TOP OF THE OTHER, NOT SIDE BY SIDE.
4. PROVIDE STANDARD 90° HOOKS ON ONE-FOURTH OF BOTTOM REINFORCEMENT (OR TWO BARS MINIMUM IN CORNERS OF STIRRUPS).
5. PROVIDE A STIRRUP CAP (⟵) FOR EVERY STIRRUP, WITH 90 DEGREE HOOK POSITIONED ON SLAB SIDE OF SPANDREL BEAM.
6. SEE CONCRETE BEAM SCHEDULE FOR SIDE REINFORCEMENT. SPLICE AT MIDSPAN WITH TYPE II TENSION LAP SPLICES (SEE TABLE ON S301). EXTEND AT END SUPPORTS AND PROVIDE STANDARD 90 DEGREE HOOKS (2" END CLEARANCE). SPACE UNIFORMLY BETWEEN TOP AND BOTTOM BEAM REINFORCEMENT.

TYPICAL MULTI-SPAN BEAM REINFORCEMENT

C — S305

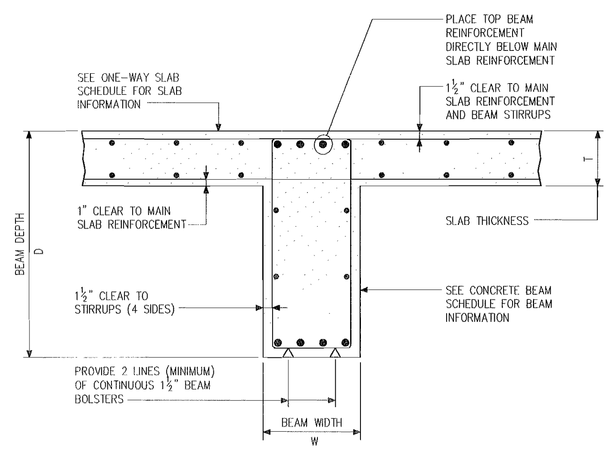

TYPICAL BEAM PERPENDICULAR TO SLAB SPAN

D — S305

TYPICAL BEAM PARALLEL TO SLAB SPAN

E — S305

NOTES:

1. CONSTRUCTION JOINT LOCATION, IN GENERAL, SHALL BE WITHIN THE MIDDLE ONE-THIRD OF BEAM SPAN. ALL CONSTRUCTION JOINT LOCATIONS SHALL BE APPROVED BY THE ARCHITECT/ENGINEER. SEE SECTION 03300, CAST-IN-PLACE CONCRETE, SUBPARAGRAPH 1.05B.1 OF THE PROJECT MANUAL FOR SHOP DRAWING SUBMITTAL REQUIREMENTS.
2. SHEAR TRANSFER DOWELS: NUMBER AND SIZE OF DOWELS TO BE DETERMINED BY THE ARCHITECT/ENGINEER. NORMALLY THESE DOWELS ARE REQUIRED ONLY WHEN CONSTRUCTION JOINT IS NOT WITHIN MIDDLE ONE-THIRD OF BEAM SPAN.

TYPICAL BEAM CONSTRUCTION JOINT

F — S305

SECTION

1" = 1'-0" — 1 — S102A, S103A, S104A, S105A

CONCRETE BEAM SCHEDULE

MARK	SIZE WxD	REINFORCEMENT				STIRRUPS			ELEVATION	REMARKS
		TOP LEFT	BOTTOM	TOP RIGHT	SIDE (1/2 EA FACE)	SIZE	SPACING	SHAPE	SUPPORT CENTERLINES	
B101										
B102										
B103 & B103A										
B104										
B105										
B106										
B107										
B108										
B110										
B111										
B121										
B122										
B131										
B132										
B133										
B134										
B135										

CONCRETE BEAM SCHEDULE NOTES:

1. SEE DRAWING S301 FOR POST-TENSION CONCRETE BEAM SCHEDULE.
2. SEE DRAWING S002 FOR CONCRETE SCHEDULE AND GENERAL NOTES PERTAINING TO CONCRETE AND REINFORCING STEEL.
3. SEE DETAIL D/S305 (TYPICAL SINGLE-SPAN BEAM REINFORCEMENT) FOR INFORMATION REGARDING DETAILING OF BEAM REINFORCEMENT.
4. SEE DETAIL C/S305 (TYPICAL MULTI-SPAN BEAM REINFORCEMENT) FOR INFORMATION REGARDING DETAILING OF BEAM REINFORCEMENT.
5. SEE DETAILS D/S305 (TYPICAL BEAMS PERPENDICULAR TO SLAB SPAN) AND E/S305 (TYPICAL BEAM PARALLEL TO SLAB SPAN) FOR INFORMATION REGARDING POSITIONING OF BEAM REINFORCEMENT.
6. SEE TABLE 1 ON DRAWING S301 FOR TENSION LAP SPLICES FOR BEAM REINFORCEMENT.
7. WHERE TOP OR BOTTOM REINFORCEMENT IS IN MULTIPLE LAYERS, PROVIDE #11 SPACER BARS AT 6'-0" SPACING. POSITION BARS IN UPPER LAYERS DIRECTLY ABOVE BARS IN LAYER BELOW.
8. THE DESIGNATED CONCRETE BEAM SIZE (W"xD") REPRESENTS THE DIMENSIONS FROM WHICH THE BEAM REINFORCING STEEL CAGE SHOULD BE DETAILED AND FABRICATED. ACTUAL PHYSICAL DIMENSIONS OF THE CONCRETE BEAM SECTION MAY VARY SLIGHTLY FROM THE DESIGNATED SIZE IN SOME LOCATIONS.
9. SIDE REINFORCEMENT: SPLICE AT MIDSPAN WITH TYPE II TENSION LAP SPLICES. EXTEND AT END SUPPORTS AND PROVIDE STANDARD 90° HOOKS (2" END CLEARANCE). SPACE UNIFORMLY BETWEEN TOP AND BOTTOM BEAM REINFORCEMENT.
10. TO FACILITATE INSTALLATION OF REINFORCING STEEL IN SINGLE SPAN BEAMS, DO NOT PROVIDE LONGITUDINAL BARS WITH HOOKS AT BOTH ENDS. INSTEAD, PROVIDE TWO BARS, EACH WITH A HOOK AT ONE END. SPLICE TOP AND SIDE BARS AT MIDSPAN AND BOTTOM BARS AT THE SUPPORT. PROVIDE TYPE III TENSION LAP SPLICES FOR TOP BARS AND TYPE II TENSION LAP SPLICES FOR SIDE AND BOTTOM BARS.
11. ADJUST POSITIONING OF BEAM REINFORCEMENT AS REQUIRED TO AVOID INTERFERENCE WITH COLUMN VERTICAL REINFORCEMENT.
12. BEAM DEPTHS MAY BE ADJUSTED ± 1/2 INCH TO ACCOMMODATE FORMWORK REQUIREMENTS.
13. SEE DETAIL F/S305 (TYPICAL BEAM CONSTRUCTION JOINT) AND SECTION 03300, CAST-IN-PLACE CONCRETE, SUBPARAGRAPH 1.05B.1 OF THE PROJECT MANUAL FOR INFORMATION REGARDING CONSTRUCTION JOINTS IN BEAMS.

FINK ROBERTS & PETRIE, INC.
Consulting Engineers
4040 Vincennes Circle, Suite 200
Indianapolis, Indiana 46268
317-872-8400

Eddy Street Commons
Phase II
Parking Garage
Project Number 108-004

Owner
City of South Bend, Indiana

Construction Manager
Kite Realty Group
30 South Meridian Street, Suite 1100
Indianapolis, Indiana 46204
317-577-5600

Structural Engineer
Fink, Roberts & Petrie, Inc.
4040 Vincennes Circle, Suite 200
Indianapolis, Indiana 46268
317-872-8400

Architect
Looney Ricks Kiss
175 Toyota Plaza, Suite 600
Memphis, Tennessee 38103
901-521-1440

Mechanical, Electrical & Plumbing Engineer
Circle Design Group
5510 South East Street, Suite F
Indianapolis, Indiana 46227
317-781-0200

Parking Consultant
Walker Parking Consultants
6902 East 75th Street, Suite 210
Indianapolis, Indiana 46250
317-842-6890

Civil Engineer/Landscape Architect
The Troyer Group
550 Union Street
Mishawaka, Indiana 46554
574-259-9976

100% Construction Documents
January 23, 2008

REVISION DATE | REVISION DESCRIPTION

CERTIFIED BY

ISSUE DATE: 01/23/08
DESIGNED BY: 07097
DRAWN BY: SVC
CHECKED BY: JMP

SHEET TITLE: CONCRETE BEAM SCHEDULE, SECTIONS AND DETAILS

SHEET NO.: S309

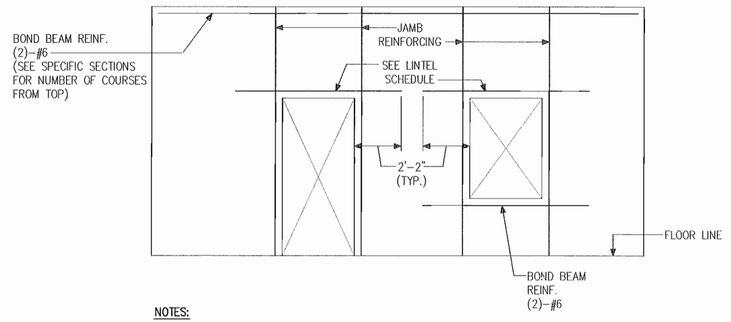

NOTES:

1. SEE MASONRY NOTE 10 ON THIS DRAWING FOR HORIZONTAL JOINT REINFORCEMENT REQUIREMENTS.
2. REINFORCING SHOWN IS TYPICAL AT ALL INTERIOR WALLS UNLESS NOTED OTHERWISE ON INDIVIDUAL BUILDING PLANS.
3. ALL MASONRY WALLS SHALL BE BRACED AT TOP OF WALL. SEE TYPICAL DETAILS ON THIS DRAWING.
4. FOR DETAILS OF ADDITIONAL BOND BEAMS AT TOP OF PARAPETS, ETC., SEE ARCHITECTURAL DRAWINGS.
5. SEE NOTE 10 FOR HORIZONTAL JOINT REINFORCEMENT.

TYPICAL CMU WALL REINFORCEMENT
INTERIOR WALLS — 1B / S003

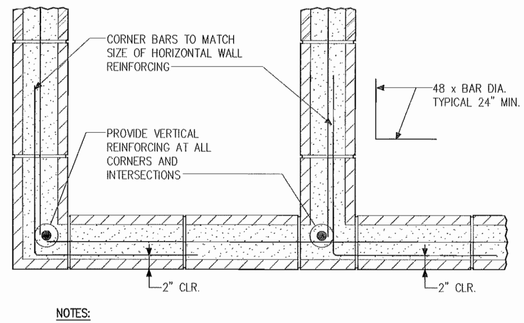

NOTES:

1. SEE INDIVIDUAL BUILDING PLANS FOR HORIZONTAL AND VERTICAL REINFORCING STEEL REQUIREMENTS.
2. SEE GENERAL NOTES FOR REINFORCING STEEL CLEARANCES.
3. PROVIDE DOWELS FROM SLAB OR FOOTING BELOW FOR EVERY VERTICAL BAR.

TYPICAL CMU WALL REINFORCEMENT
EXTERIOR WALLS — 2 / S003

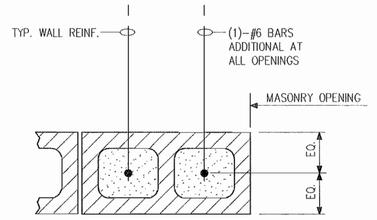

TYPICAL JAMB REINFORCING
1½" = 1'–0" — 3 / S003

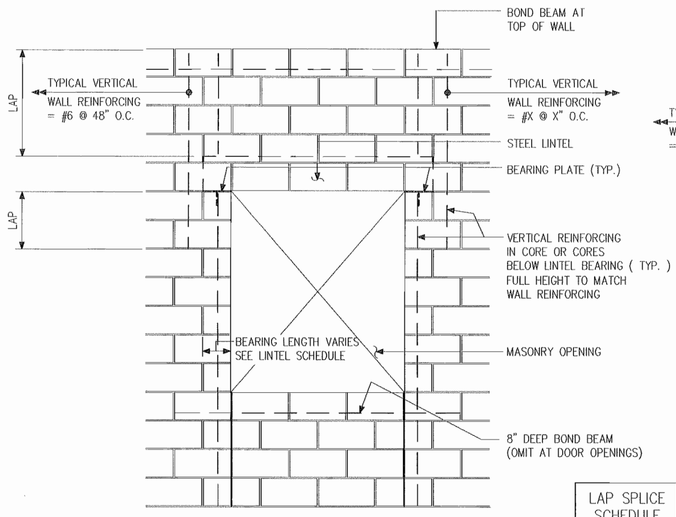

NOTES:

1. SEE DETAIL 8/S4.02 FOR LAP SPLICE LENGTHS.

TYPICAL CMU REINFORCING
AT EXTERIOR WALL OPENING — 1A / S003

LAP SPLICE SCHEDULE	
#3	18"
#4	24"
#5	30"
#6	36"
#7	42"

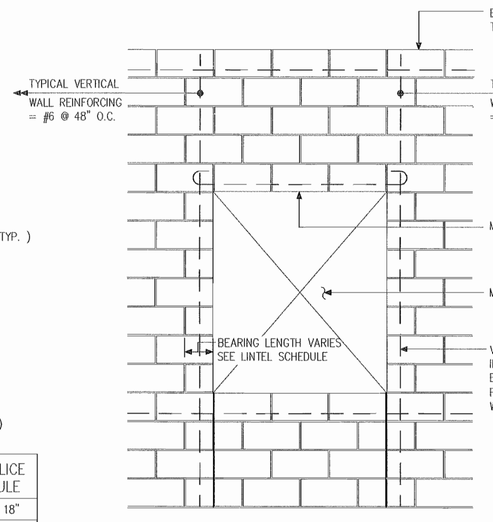

TYPICAL CMU REINFORCING
AT EXTERIOR WALL OPENING — 1 / S003

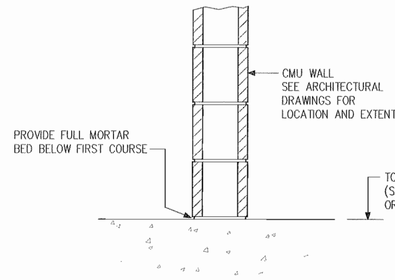

INTERIOR WALL (4A)

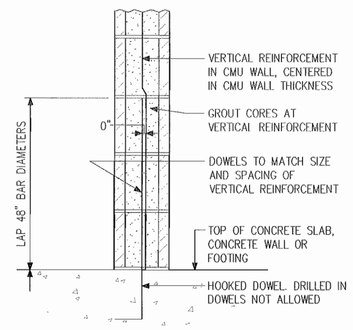

EXTERIOR WALL (4B)

BOTTOM OF CMU WALL ATTACHMENT TO STRUCTURE
4A, 4B / S003

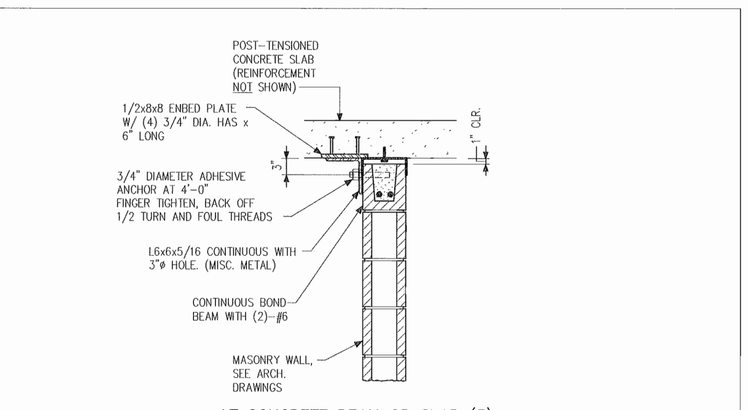

AT CONCRETE BEAM OR SLAB (5)

TYPICAL TOP OF CMU WALL ATTACHMENT TO STRUCTURE
ALL WALLS — 5 / S003

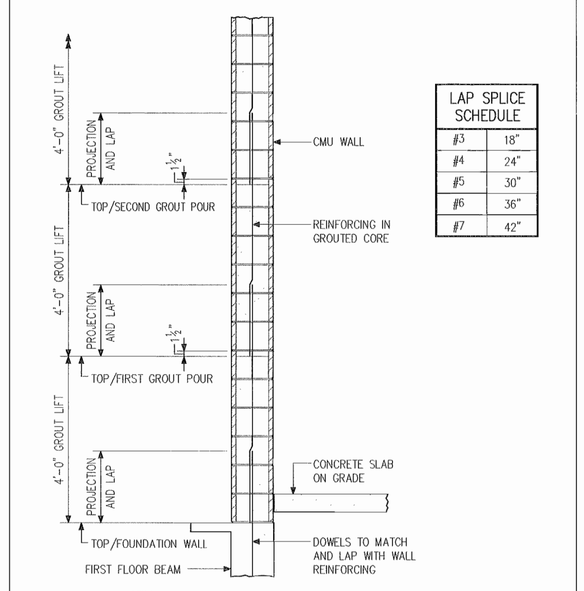

LAP SPLICE SCHEDULE	
#3	18"
#4	24"
#5	30"
#6	36"
#7	42"

NOTES :

1. SEE MASONRY NOTES 6 AND 10 ON DRAWING S001

TYPICAL VERTICALLY REINFORCED CMU WALL
6 / S003

MASONRY NOTES

1. ALL MASONRY IS RUNNING BOND AND LIGHTWEIGHT BLOCK . GROUT ALL BLOCK SOLID BELOW GRADE .
2. ALL MASONRY WALLS SHALL BE BRACED AT TOP PER SECTIONS ON DRAWING S003 AND OTHER STRUCTURAL DRAWINGS. BRACING MUST RESIST A MINIMUM OF 200 PLF PERPENDICULAR TO WALL IN EITHER DIRECTION. BRACING MUST ALLOW FOR INDEPENDENT MOVEMENT OF STRUCTURE VERTICALLY. FOR DETAILS REQUIRING DRILLED–IN ANCHORS, USE A CARBIDE BIT DRILL TO PREVENT DAMAGE TO REINFORCING STEEL.
3. CONCRETE MASONRY CONSTRUCTION SHALL CONFORM TO THE LATEST EDITION OF THE "BUILDING CODE REQUIREMENTS FOR MASONRY STRUCTURES" (ACI 530/ASCE 5) AND THE 2000 INDIANA BUILDING CODE CHAPTER 21.
4. QUALITY CONTROL PROVISIONS SHALL BE OBSERVED DURING ALL MASONRY CONSTRUCTION AS SPECIFIED IN SECTION 2105 (QUALITY ASSURANCE) OF THE 2000 INDIANA BUILDING CODE. FOR SPECIAL INSPECTION OF "STRUCTURAL MASONRY", THE ENGINEERING TESTING FIRM EMPLOYED BY THE OWNER (SPECIFICATION 01450) SHALL PERFORM INSPECTION OF STRUCTURAL MASONRY CONSTRUCTION PER THE 2000 INTERNATIONAL BUILDING CODE. "STRUCTURAL MASONRY" FOR THIS PROJECT SHALL INCLUDE (1) ALL MASONRY IN EXTERIOR WALLS AND (2) ONLY THOSE INTERIOR WALLS WHICH REQUIRE VERTICAL REINFORCEMENT PER THE STRUCTURAL DRAWINGS. THE INSPECTOR SHALL FURNISH WRITTEN REPORTS TO THE OWNER, ARCHITECT, ENGINEER AND BUILDING OFFICIAL.
5. THE MINIMUM 28 DAY COMPRESSIVE STRENGTH (f'm) OF MASONRY SHALL BE 2000 PSI.
6. ALL BLOCK SHALL BE LIGHTWEIGHT, ASTM C90–GRADE N, TYPE 1, MINIMUM COMPRESSIVE STRENGTH OF UNITS SHALL BE 2800 PSI.

   MORTAR: TYPE "S" MORTAR SHALL BE USED FOR ALL EXTERIOR MASONRY WALLS AND FOR ALL INTERIOR PARTITION WALLS. CEMENTITIOUS MATERIAL SHALL BE LIME AND/OR PORTLAND CEMENT.

   A. GROUT: GROUT SHALL BE PROPORTIONED BY VOLUME AS SPECIFIED IN TABLE NO. 21–B, "GROUT PROPORTIONS BY VOLUME" OF THE 2000 INDIANA BUILDING CODE.
   B. GROUT SHALL ATTAIN A MINIMUM COMPRESSIVE STRENGTH OF 2,500 PSI AT 28 DAYS.
   C. MAXIMUM HEIGHT OF GROUT POURS SHALL BE IN ACCORDANCE WITH TABLE NO. 21–C, "GROUTING LIMITATIONS" OF THE 2000 INDIANA BUILDING CODE.
   D. MAXIMUM HEIGHT OF GROUT LIFTS (WITHIN A GROUT POUR) SHALL BE IN ACCORDANCE WITH SECTION 2104.6 OF THE 1998 INDIANA BUILDING CODE. FOR GROUT POUR GREATER THAN 5 FEET, PROVIDE CLEANOUTS @ BOTTOM COURSE OF EACH VERTICAL BAR. SEE 6/S6A .
7. ALL REINFORCING STEEL BARS SHALL BE ASTM A–615 GRADE 60.
8. ALL REINFORCING BAR LAP SPLICES SHALL CONFORM TO THE LATEST EDITION OF THE "BUILDING CODE REQUIREMENTS FOR MASONRY STRUCTURES" (ACI 530/ASCE 5) EXCEPT THAT NO LAP SPLICES SHALL BE LESS THAN 48 BAR DIAMETERS. ALL SPLICES SHALL BE WIRED TOGETHER.
9. HORIZONTAL JOINT REINFORCEMENT (ALL WALLS AND PIERS) HORIZONTAL JOINT REINFORCEMENT SHALL BE MILL GALVANIZED . LAP SPLICE 12" MINIMUM FOR NO. 9 GAGE . USE NO. 9 GAGE TRUSS OR LADUR TYPE AT EVERY COURSE (8" O.C.) .
10. VERTICAL REINFORCEMENT
    VERTICAL REINFORCING STEEL SHALL BE PLACED IN CENTER OF WALL UNLESS OTHERWISE NOTED. PROVIDE REBAR POSITIONING ACCESSORIES TO SUPPORT ALL REINFORCING STEEL AS REQUIRED. SEE SPECIFICATIONS FOR PRODUCTS. ALL VERTICAL REINFORCING SHALL BE HELD IN PLACE AT 8'–0" O.C. MAX AND AT EACH END. MINIMUM CLEARANCE SHALL BE 3/4" FROM MASONRY AND ONE BAR DIAMETER OR 1" (WHICHEVER IS MORE) BETWEEN BARS.
    PROVIDE REINFORCING STEEL IN VERTICAL CORES AS INDICATED ON THE DRAWINGS. IN ADDITION, PROVIDE 1 #6 REBAR IN VERTICAL CORES ON EACH SIDE OF ALL OPENINGS, DOORS AND WINDOWS FOR FULL HEIGHT OF WALL. PROVIDE 1 #6 AT ALL CORNERS, INTERSECTIONS AND END CELLS OF WALLS FOR FULL HEIGHT OF WALL. PROVIDE DOWEL FROM SLAB OR FOOTING BELOW AT EVERY VERTICAL BAR. SEE DETAILS 4B/S6A AND 6/S6A . SEE NOTES 2, 3 ABOVE .
11. ALL HORIZONTAL REINFORCING STEEL SHALL BE PLACED IN CONTINUOUSLY GROUTED BOND BEAMS. UNLESS OTHERWISE INDICATED, PROVIDE HORIZONTAL BOND BEAM WITH 2–#6 CONTINUOUS IN THE TOP OF ALL CMU WALLS AND AT ALL POINTS OF STRUCTURAL ATTACHMENT AND MISCELLANEOUS STEEL ANCHORAGE. MINIMUM CLEARANCE SHALL BE 3/4" FROM MASONRY AND ONE BAR DIAMETER OR 1" (WHICHEVER IS MORE) BETWEEN BARS.
12. ALL CELLS WHICH RECEIVE REINFORCING SHALL BE GROUTED SOLID.
13. SHOP DRAWINGS

    SHOP DRAWINGS SHALL BE SUBMITTED FOR "STRUCTURAL MASONRY" (DEFINED IN NOTE 5) REINFORCEMENT AS FOLLOWS: PROVIDE 1/4" = 1'–0" SCALE ELEVATIONS OF ALL STRUCTURAL MASONRY INDICATING CONTROL JOINTS AND ALL REINFORCING INCLUDING HORIZONTAL JOINT REINFORCEMENT AND TIES TO STRUCTURE. SHOP DRAWINGS SHALL BE PREPARED BY A QUALIFIED REINFORCING STEEL DETAILER AND SHALL INCLUDE BAR POSITIONS, CLEARANCES AND POSITIONING ACCESSORIES.
14. SEE ARCHITECTURAL DRAWINGS AND/OR SPECIFICATIONS FOR CONTROL JOINT LOCATIONS AND HORIZONTAL JOINT REINFORCEMENT FOR MASONRY WALLS NOT INDICATED ON STRUCTURAL DRAWINGS. ANY RELIEVING ANGLES SHALL BE DISCONTINUOUS AT CONTROL JOINTS. REFER TO ARCHITECTURAL DRAWINGS AND SPECIFICATIONS IN ADDITION TO STRUCTURAL DRAWINGS FOR TOTAL EXTENT OF MASONRY CONSTRUCTION, DIMENSIONAL LAYOUT OF WALLS LOCATIONS AND DETAILS OF OPENINGS, SPECIAL COURSING, ADDITIONAL MISCELLANEOUS STEEL EMBEDMENTS, TIES FOR VENEER, ETC.
15. GROUTED CORES SHALL BE PROVIDED AT ALL ANCHORS, AND SLEEVE ANCHORS, ETC.
16. MASONRY CONTRACTOR SHALL PROVIDE FOR AND COORDINATE WITH OTHER TRADES FOR EMBEDDED ITEMS IN MASONRY WALL.
17. IF DRILLING INTO CMU OR CONCRETE IS REQUIRED, USE CARBIDE BIT DRILL TO PREVENT DAMAGE TO REINFORCING STEEL AND USE A JAMES R–METER TO LOCATE AND AVOID REINFORCEMENT .
18. MASONRY CONTRACTOR TO USE A.W.S. CERTIFIED WELDERS FOR ALL WELDING .
19. COORDINATION NOTE :

    THE CONTRACTOR SHALL COORDINATE THE WORK BETWEEN THE MASONRY CONTRACTOR, WINDOW–WALL CONTRACTOR, AND THE STEEL FABRICATOR AND VERIFY DIMENSIONS AND ELEVATIONS OF THE MASONRY AS IT RELATES TO THE STEEL LINTELS AND OTHER SUPPORTS WITH THE ARCHITECTURAL DRAWINGS.

FINK ROBERTS & PETRIE, INC.
Consulting Engineers
4040 Vincennes Circle, Suite 300
Indianapolis, Indiana 46268

Eddy Street Commons
Phase II
Parking Garage
Project Number 108-004

Owner
City of South Bend, Indiana

Construction Manager
Kite Realty Group
30 South Meridian Street, Suite 1100
Indianapolis, Indiana 46204
317-577-5600

Structural Engineer
Fink, Roberts & Petrie, Inc.
4040 Vincennes Circle, Suite 300
Indianapolis, Indiana 46268
317-872-8400

Architect
Looney Ricks Kiss
175 Toyota Plaza, Suite 600
Memphis, Tennessee 38103
901-521-1440

Mechanical, Electrical & Plumbing Engineer
Circle Design Group
5510 South East Street, Suite F
Indianapolis, Indiana 46227
317-781-6200

Parking Consultant
Walker Parking Consultants
6002 East 75th Street, Suite 210
Indianapolis, Indiana 46250
317-842-6890

Civil Engineer/Landscape Architect
The Troyer Group
550 Union Street
Mishawaka, Indiana 46554
574-259-9976

100% Construction Documents
January 23, 2008

REVISION DATE | REVISION DESCRIPTION

CERTIFIED BY

DESIGN DATE	DRAWING NO.	DESIGN DRAWN BY	CHECKED BY
01/23/08	07097	SVC	JMP

SHEET TITLE: TYPICAL CMU DETAILS & NOTES

SHEET NO.: S400

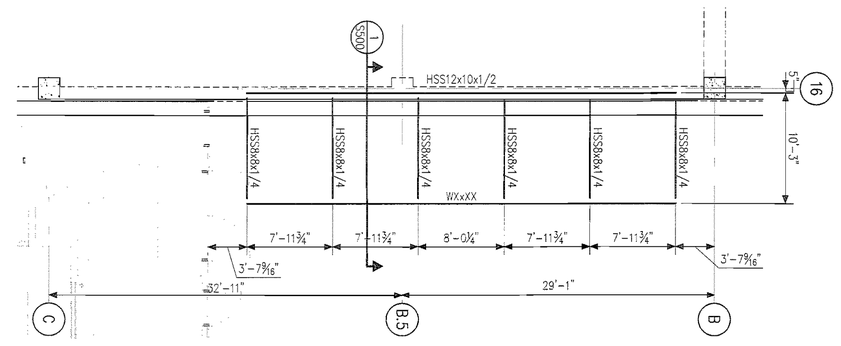

DETAIL
1/8" = 1'-0"
A
S102

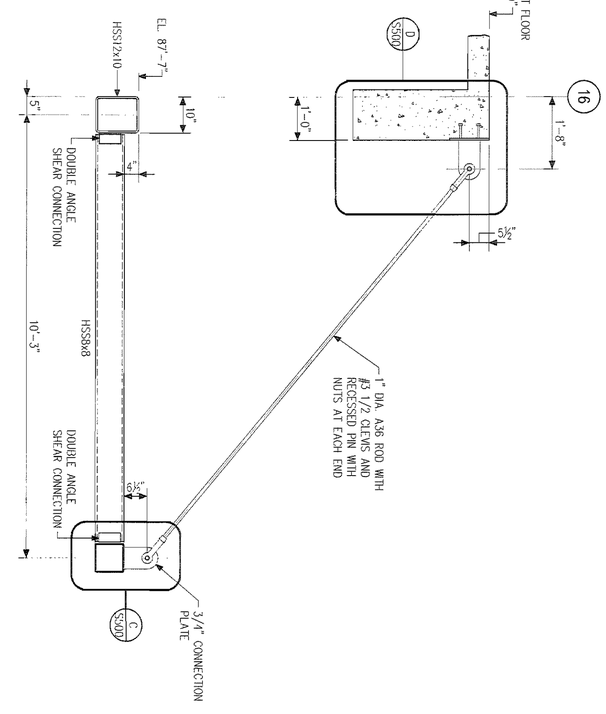

SECTION
1/2" = 1'-0"
1
S500

SHEET NO.

S500

SHEET TITLE

CANOPY FRAMING PLAN, SECTIONS AND DETAILS

DESIGN DATE
01/23/08
DESIGN PROJECT NO.
07097
DESIGN DRAWN BY
SVC
CHECKED BY
JMP

CERTIFIED BY

JOSEPH M. PETROLIA
REGISTERED
PE10100203
STATE OF INDIANA
PROFESSIONAL ENGINEER

REVISION DATE	REVISION DESCRIPTION

100% Construction Documents
January 23, 2008

Civil Engineer/Landscape Architect
The Troyer Group
550 Union Street
Mishawaka, Indiana 46554
574-339-9576

Parking Consultant
Walker Parking Consultants
6602 East 75th Street, Suite 210
Indianapolis, Indiana 46250
317-842-6800

Architect
Looney Ricks Kiss
175 Toyota Plaza, Suite 600
Memphis, Tennessee 38103
901-521-1440

Mechanical, Electrical & Plumbing Engineer
Circle Design Group
5510 South East Street, Suite F
Indianapolis, Indiana 46227
317-781-9200

Structural Engineer
Fink, Roberts & Petrie, Inc.
4040 Vincennes Circle, Suite 300
Indianapolis, Indiana 46268
317-872-8400

Construction Manager
Kite Realty Group
30 South Meridian Street, Suite 1100
Indianapolis, Indiana 46204
317-577-5600

Owner
City of South Bend, Indiana

Eddy Street Commons
Phase II
Parking Garage
Project Number 108-004

FINK ROBERTS & PETRIE, INC.
Consulting Engineers
4040 Vincennes Circle Suite 300
Indianapolis, Indiana 46268

GENERAL PROJECT NOTES AND CONDITIONS

GENERAL

1. THIS PROJECT IS TO BE CONSTRUCTED IN ONE PHASE. CONTRACTOR TO COORDINATE WITH OWNER REGARDING PHASED TURN OVER OF THE BUILDING. CONFIRM PHASED TURN OVER PLAN WITH AUTHORITY HAVING JURISDICTION.
2. ALL GENERAL NOTES APPLY TO THE ENTIRE SCOPE OF THIS PROJECT AND THE CONTRACT DOCUMENTS (DRAWINGS, SPECIFICATIONS, ADDENDUMS, SUPPLEMENTAL DRAWINGS, ETC.) OF THE ARCHITECT AND ITS CONSULTANTS, REGARDLESS OF WHETHER OR NOT THEY ARE NOTED OR KEYED ON EVERY SHEET TO A SPECIFIC DETAIL. IN THE CASE OF DISCREPENCIES BETWEEN THE DRAWINGS AND THE SPECIFICATIONS, THE MOST STRINGENT CONDITION APPLIES.
3. THE CONTRACT DOCUMENTS INCLUDE THE PROJECT SPECIFICATIONS WHICH CANNOT BE EXCLUDED, MODIFIED, OR AMENDED, IN ANY WAY WITHOUT WRITTEN CONSENT OF THE ARCHITECT AND HIS CONSULTANTS.
4. THE CONTRACT DOCUMENTS INCLUDE THE DRAWINGS, SPECIFICATIONS, ADDENDUMS, SUPPLEMENTAL DRAWINGS, ETC OF THE ARCHITECT AND ITS CONSULTANTS. AS SUCH, REPRESENT AN INTEGRATED SET OF CONTRACT DOCUMENTS THAT CANNOT BE INDIVIDUALLY SEPARATED INTO VARIOUS DISCIPLINES. THE GENERAL CONTRACTOR SHALL ENSURE THAT SUB-CONTRACTORS, SUPPLIERS, ETC. WILL BE GIVEN COMPLETE SETS OF THE CONTRACT DOCUMENTS. THE OWNER, ARCHITECT AND IT'S CONSULTANTS SHALL NOT BE RESPONSIBLE FOR ANY EXPENSES RELATED FROM THE USE AND COORDINATION OF INCOMPLETE SETS OF DOCUMENTS.
5. ERRORS OR OMISSIONS IN ANY SCHEDULE OR DRAWINGS DO NOT RELIEVE THE CONTRACTOR(S) FROM EXECUTING THE WORK INTENDED IN THE DRAWINGS OR DESCRIBED IN THE SPECIFICATIONS. IN THE CASE OF A CONFLICT OR DISCREPENCY, THE MOST STRINGENT CONDITION SHALL APPLY.
6. THE CONTRACTOR(S) SHALL BEAR THE TOTAL EXPENSE FOR AND SHALL REPAIR TO EXISTING CONDITIONS, ANY DAMAGE TO EXISTING CONSTRUCTION, EQUIPMENT OR IMPROVEMENTS NOT INDICATED IN THE DRAWINGS OR SPECIFICATIONS TO RECEIVE ALTERATIONS, ADDITIONS OR REMOVAL.
7. THE CONTRACTOR(S) SHALL BEAR THE TOTAL EXPENSE FOR AND SHALL REPAIR, TO EXISTING CONDITIONS, ANY DAMAGE TO EXISTING UNDERGROUND UTILITIES, PIPING, CONDUIT OR EQUIPMENT, OF ANY KIND.
8. FLASHING SHALL BE PROVIDED AS NECESSARY TO PREVENT THE ENTRANCE OF WATER AT OPENINGS OR PROJECTIONS THROUGH VENEERED WALLS. ALL EXTERIOR EXPOSED WORK SHALL BE INSTALLED IN SUCH MANNER TO ASSURE WEATHER TIGHT CONDITION. CONTRACTOR SHALL PROVIDE ALL CAULKING AND WEATHER BARRIER MATERIALS REQUIRED FOR WEATHER TIGHT CONDITIONS. ALL OCCUPIED SPACES SHALL RECEIVE AN INSULATION BARRIER THAT IS CONTINUOUS AT ALL EXTERIOR WALL, CEILING AND FLOOR SURFACES.
9. PROVIDE POSITIVE DRAINAGE AWAY FROM EXTERIOR DOORS AT ALL CONDITIONS. HOWEVER IN NO CASE SHALL THE SLOPES OR CROSS SLOPES BE MORE THAN 2 % TO MEET ANY ACCESSIBILITY CODE, STANDARD OR ORDINANCE.
10. ONE SET OF CONSTRUCTION DOCUMENTS APPROVED BY THE BUILDING DEPARTMENT, SHALL BE KEPT AT THE SITE OF THE WORK AND SHALL BE OPEN TO INSPECTION BY THE BUILDING OFFICIAL OR A DULY AUTHORIZED REPRESENTATIVE
11. WORK SHALL BE INSTALLED IN ACCORDANCE WITH THE APPROVED CONSTRUCTION DOCUMENTS, ANY CHANGES MADE DURING CONSTRUCTION THAT ARE NOT IN COMPLIANCE WITH THE APPROVED CONSTRUCTION DOCUMENTS SHALL BE RESUBMITTED FOR APPROVAL AS AN AMENDED SET OF CONSTRUCTION DOCUMENTS.
12. ANY PROPOSAL TO INSTALL ALTERNATE STRUCTURAL PRODUCT OR SYSTEM TO WHICH BUILDING CODES APPLY SHALL BE SUBMITTED TO THE ENFORCEMENT AGENCY FOR REVIEW AND COMPLIANCE WITH THE CODES AND BE MADE PART OF THE ENFORCEMENT AGENCY'S RECORDED SET OF PERMIT DOCUMENTS.
13. ALL SHORING AND RESHORING PROCEDURES, PLANS AND DETAILS SHALL BE SUBMITTED TO THE ENFORCEMENT AGENCY FOR RECORD KEEPING. EACH SHORING AND RESHORING INSTALLATION SHALL BE SUPERVISED, INSPECTED AND CERTIFIED TO BE IN COMPLIANCE WITH THE SHORING DOCUMENTS BY THE CONTRACTOR.

ACCESSIBILITY

1. THE GENERAL CONTRACTOR SHALL ENSURE THAT ALL CONSTRUCTION MEETS OR EXCEEDS THE MINIMUM REQUIREMENTS OF THE STATE OF INDIANA, THE CITY OF SOUTH BEND, AND THE INDIANA ACCESSIBILITY CODE.
2. ALL CONTROL DEVICES FOR LIGHT, POWER, HEAT, ALARMS, ETC. SHALL BE MOUNTED NO HIGHER THAN 48" FROM THE FLOOR TO THE HIGHEST OPERATIONAL ELEMENT OF THE DEVICE. TO BE WITHIN THE REACH RANGE OF INDIVIDUALS WITH DISABILITIES.
3. EXTERIOR AND INTERIOR PASSAGE DOORS, WHERE OPERABLE HARDWARE IS PROVIDED, SHALL BE EQUIPPED WITH HANDLES, PULLS, LATCHES, LOCKS OR OTHER OPERATING HARDWARE DEVICES HAVING A SHAPE THAT IS EASY TO GRASP WITH ONE HAND AND DOES NOT REQUIRE GRASPING, TIGHT PINCHING OR WRIST-TWISTING MOTION TO OPERATE. CONSISTENT WITH THE MOST STRINGENT ACCESSIBILITY CODE WITHIN THE PROJECT JURISDICTION.
4. DOORS THAT LEAD TO AREAS THAT MIGHT PROVE DANGEROUS TO BLIND, VISUALLY IMPAIRED PERSONS OR PERSONS WITH LOW VISION CAPABILITIES (FOR EXAMPLE, DOORS LEADING TO LOADING DOCKS OR PLATFORMS, BOILER ROOMS, STAGES, ELECTRICAL EQUIPMENT ROOMS, ETC.) SHALL BE MADE READILY IDENTIFIABLE TO THE TOUCH BY A TEXTURED SURFACE ON THE DOOR HANDLE, KNOB, PULL OR OTHER OPERATING HARDWARE.
5. CONTRACTOR TO VERIFY THAT NO ELEMENT BETWEEN 27" AND 80" A.F.F. PROJECTS MORE THAN 4" INTO AN ACCESSIBLE ROUTE UNLESS IDENTIFIED WITH A CANE DETECTION ELEMENT. THIS INCLUDES LIGHT SCONCES, FIRE EXTINGUISHERS, FIRE EXTINGUISHER CABINETS, PULL STATIONS, STROBES SIGNS, HANGING FIXTURES, ETC.
6. PROVIDE SLIP RESISTANT FLOOR SURFACES ALONG ALL ACCESSIBLE ROUTES.
7. CHANGES IN LEVEL BETWEEN 1/4" AND 1/2" SHALL BE BEVELLED WITH A SLOPE NO GREATER THAN 1:2. CHANGES IN LEVEL GREATER THAN 1/2" SHALL BE RAMPED PER ANSI

MOISTURE PROTECTION

1. CONTRACTOR IS TO ENSURE THAT ALL FINISH CONDITIONS PROVIDE POSITIVE DRAINAGE AWAY FROM STRUCTURE AT ALL DOORS AND ALL OTHER EXTERIOR LOCATIONS.
2. FLASHING SHALL BE PROVIDED AS NECESSARY TO PREVENT THE ENTRANCE OF WATER AT OPENINGS OR PROJECTIONS THROUGH EXTERIOR WALLS AND ROOFS. ALL EXTERIOR EXPOSED WORK SHALL BE INSTALLED IN SUCH MANNER AS TO ENSURE WEATHER TIGHT CONDITIONS. CONTRACTOR SHALL PROVIDE ALL CAULKING AND WEATHER BARRIER MATERIALS REQUIRED TO ENSURE WEATHER TIGHT CONDITIONS.
3. PROPER WEATHER PROTECTION SHALL BE PROVIDED BEHIND VENEER WALLS TO ENSURE WEATHER TIGHT CONDITIONS AND PROPER DRAINAGE IS PROVIDED.

FIRE RATING

1. FIRE RESISTIVE CONSTRUCTION SHALL BE MAINTAINED AT ALL PENETRATIONS OF ANY SIZE, SHAPE OR CONFIGUREMENT FOR MECHANICAL, ELECTRICAL, PLUMBING , FIRE PROTECTION, TELEPHONE/ DATA, SECURITY, CABLE TV SYSTEMS ETC. AS REQUIRED BY THE JURISDICTIONAL AUTHORITIES OVER THE PROJECT.
2. ALL PARTITIONS ENCLOSING VERTICAL OPENINGS SUCH AS STAIRWAYS, UTILITY SHAFTS AND ELEVATOR SHAFTS WHICH ARE REQUIRED TO HAVE A FIRE RESISTANCE RATING SHALL EXTEND FROM FLOOR TO FLOOR OR FLOOR TO ROOF. THESE WALLS SHALL BE CONTINOUS THROUGH ALL CONCEALED SPACES SUCH AS THE INTERSTITIAL SPACE ABOVE THE CEILING MEMBRANE. THE SUPPORTING STRUCTURE SHALL HAVE A FIRE RESISTANCE RATING EQUAL TO OR GREATER THAN THE FIRE RESISTANCE RATING REQUIRED FOR THE VERTICAL ENCLOSURE. WHERE THE OPENINGS ARE OFFSET AT INTERMEDIATE FLOORS, THE OFFSET AND FLOOR CONSTRUCTION SHALL BE OF CONSTRUCTION HAVING A FIRE RESISTANCE OF NOT LESS THAN THAT REQUIRED FOR THE ENCLOSING PARTITIONS.
3. CORRIDOR PARTITIONS, SMOKESTOP PARTITIONS, HORIZONTAL EXIT PARTITIONS, EXIT ENCLOSURES, AND FIRE RATED WALLS REQUIRED TO HAVE PROTECTED OPENINGS SHALL BE EFFECTIVELY AND PERMANENTLY IDENTIFIED WITH SIGNS OR STENCILING IN A MANNER ACCEPTABLE TO THE AUTHORITY HAVING JURISDICTION. SUCH IDENTIFICATION SHALL BE ABOVE ANY DECORATIVE CEILING AND IN CONCEALED SPACES. SUGGESTED WORDING: "FIRE AND SMOKE BARRIER - PROTECT ALL OPENINGS".

FIRE PROTECTION OF STEEL MEMBERS

1. STEEL COLUMNS, GIRDERS, TRUSSES, BEAMS, LINTELS OR OTHER STRUCTURAL STEEL MEMBERS THAT ARE REQUIRED TO HAVE A FIRE RESISTANCE RATING AND THAT SUPPORT MORE THAN TWO FLOORS OR ONE FLOOR AND ROOF, OR SUPPORT A LOAD BEARING WALL OR A NON-LOADBEARING WALL MORE THAN TWO STORIES HIGH SHALL BE INDIVIDUALLY PROTECTED ON ALL SIDES FOR ITS FULL LENGTH WITH MATERIALS HAVING THE REQUIRED FIRE RESISTANCE RATING AND TO THE SATISFACTION AND ACCEPTANCE OF THE AUTHORITY HAVING JURISDICTION.

FIRE BLOCKING

1. WALLS AND STUD PARTITIONS SHALL BE FIREBLOCKED AT FLOORS, CEILINGS AND ROOFS. FIREBLOCKING IN NONCOMBUSTIBLE PARTITIONS SHALL NOT BE REQUIRED AT THE CEILING FOR SUSPENDED CEILING SYSTEMS. FIREBLOCKING SHALL CONSIST OF APPROVED NONCOMBUSTIBLE MATERIALS UNLESS OTHERWISE SPECIFIED IN THE CODE. MATERIAL SHALL BE SECURELY FASTENED IN PLACE.
2. FIREBLOCKING SHALL BE PROVIDED IN ALL WALLS AND PARTITIONS TO CUT OFF ALL CONCEALED DRAFT OPENINGS BOTH HORIZONTAL AND VERTICAL AND TO FORM A FIRE BARRIER BETWEEN FLOORS AND BETWEEN THE UPPER FLOOR AND THE ROOF SPACE.
3. THE ANNULAR SPACE AROUND PIPES, TUBES, CONDUIT, WIRES, CABLES AND VENTS AND ANY OTHER EQUIPMENT OF ANY TYPE SHALL BE PROTECTED IN ACCORDANCE WITH THE BUILDING CODE.
4. FIREBLOCKING SHALL NOT BE COVERED OR CONCEALED UNTIL INSPECTED BY THE BUILDING OFFICIAL.
5. PENETRATIONS INTO OR THROUGH FIRE BARRIERS, FIRE WALLS, SMOKE BARRIER WALLS, FIRE PARTITIONS AND ANY RATED ASSEMBLY SHALL BE PROTECTED BY AN APPROVED FIRE STOP SYSTEM INSTALLED IN ACCORDANCE WITH THE TESTED ASSEMBLY.
6. WHERE RECESSED FIXTURES OF ANY TYPE ARE INSTALLED IN A RATED ASSEMBLY, FIRE BARRIER, FIRE WALLS, FIRE PARTITIONS ETC, THE REQUIRED FIRE RESISTANT RATING OF THE PENETRATED ASSEMBLY SHALL NOT BE REDUCED.
7. PENETRATIONS OF FIRE RESISTANCE RATED WALLS, FLOOR/ CEILINGS, AND ROOF CEILING ASSEMBLIES B/ DUCTS AND AIR TRANSFER OPENINGS THAT ARE NOT PROTECTED WITH FIRE DAMPERS SHALL BE PROTECTED BY AN APPROVED PENETRATION FIRE STOP ASSEMBLY.
8. FIRE DOOR ASSEMBLIES SHALL BE LABELED BY AN APPROVED AGENCY. THE LABELS SHALL COMPLY WITH ALL APPLICABLE CODES AND ORDINANCES AND BE PERMANENTLY AFFIXED TO THE DOOR OR FRAME. ALL FIRE DOOR ASSEMBLIES SHALL BE SELF CLOSING OR AUTOMATIC CLOSING.

FIRE PROTECTION SYSTEMS

1. IN NEW CONSTRUCTION, REQUIRED SMOKE ALARMS SHALL RECEIVE THEIR PRIMARY POWER FROM THE BUILDING WIRING WHERE SUCH WIRING IS SERVICE FROM A COMMERCIAL SOURCE AND SHALL BE EQUIPPED WITH A BATTERY BACKUP. SMOKE ALARMS SHALL EMIT A SIGNAL WHEN THE BATTERIES ARE LOW. WIRING SHALL BE PERMANENT AND WITHOUT A DISCONNECTING SWITCH OTHER THAN AS REQUIRED FOR OVERCURRENT PROTECTION.
2. THE CONTRACTOR SHALL PROVIDE THE AUTOMATIC SPRINKLER SYSTEM AS A DESIGN-BUILD CONTRACT AND SHALL COORDINATE ALL INSTALLATION REQUIREMENTS. ONLY APPROVED SPRINKLERS AND DEVICES SHALL BE USED IN AUTOMATIC SPRINKLER SYSTEMS. THE COMPLETE LAYOUT OF THE SYSTEM SHALL BE SUBMITTED TO THE BUILDING OFFICIAL FOR APPROVAL PRIOR TO INSTALLATION.
3. ALL HOSE THREADS IN CONNECTIONS SHALL BE UNIFORM WITH THAT USED BY THE FIRE DEPARTMENT OF THE APPLICABLE GOVERNING BODY.

GLAZING

1. EACH UNIT OF TEMPERED GLASS SHALL BE PERMANENTLY IDENTIFIED BY THE MANUFACTURER.
2. 2406.1.1 CPSC (CONSUMER PRODUCT SAFETY COMMISSION) 16 CFR 201. EXCEPT AS PROVIDED IN SECTIONS 2406.1.2 THROUGH 2413, ALL GLAZING SHALL PASS THE TEST REQUIREMENTS OF CPSC 16 CFR 1201.
3. 2406.2 IDENTIFICATION OF SAFETY GLAZING. EXCEPT AS INDICATED IN SECTION 2406, EACH PANE OF SAFETY GLAZING INSTALLED IN HAZARDOUS LOCATIONS SHALL BE IDENTIFIED BY A LABEL SPECIFYING THE LABELER, WHETHER THE MANUFACTURER OR INSTALLER, AND THE SAFETY GLAZING STANDARD WITH WHICH IT COMPLIES, AS WELL AS THE INFORMATION SPECIFIED IN SECTION 2403.1. THE LABEL SHALL BE ACID ETCHED, SAND BLASTED, CERAMIC FIRED OR SHALL BE OF A TYPE THAT ONCE APPLIED CANNOT BE REMOVED WITHOUT BEING DESTROYED.

MECHANICAL, ELECTRICAL AND PLUMBING

1. ALL HEATING, AIR CONDITIONING, REFRIGERATION, AND VENTILATION EQUIPMENT AND PLENUMS SHALL CONFORM TO THE REQUIREMENTS SET FORTH IN THE INDIANA MECHANICAL CODE.
2. ALL ELECTRICAL SYSTEMS SHALL COMPLY WITH THE PROVISIONS OF THE INDIANA ELECTRICAL CODE.
3. ALL PLUMBING FIXTURES AND PLUMBING INSTALLATIONS SHALL CONFORM TO THE INDIANA PLUMBING CODE.
4. ALL MECHANICAL, ELECTRICAL, PLUMBING, SECURITY, UTILITY, CABLE TV, AND TELEPHONE EQUIPMENT SHALL BE INSTALLED SO AS NOT TO BE IN CONFLICT WITH ANY WINDOW.
5. ROOF VENTS AND ROOF PENETRATIONS OF PLUMBING OR MECHANICAL EQUIPMENT SHALL BE MINIMIZED AND BE LOCATED AS TO NOT BE VISIBLE FORM ANY ADJACENT STREET. GROUP VENTS WHERE POSSIBLE TO MINIMIZE ROOF PENETRATIONS. PAINT ALL ROOF PENETRATIONS TO MATCH THE ADJACENT ROOF COLOR.
6. ELECTRICAL BOXES LOCATED ON OPPOSITE SIDES OF A 1 HOUR RATED WALL ASSEMBLY MUST BE SEPARATED BY A MINIMUM HORIZONTAL DISTANCE OF 24".

EXIT SIGNAGE

1. EXITS AND EXIT ACCESS DOORS SHALL BE MARKED BY AN APPROVED EXIT SIGN READILY VISIBLE FROM ANY DIRECTION OF EGRESS TRAVEL. ACCESS TO EXITS SHALL BE MARKED BY READILY VISIBLE EXIT SIGNS IN CASES WHERE THE EXIT OR THE PATH OF EGRESS TRAVEL IS NOT IMMEDIATELY VISIBLE TO THE OCCUPANTS. EXIT SIGN PLACEMENT SHALL BE SUCH THAT NO POINT IN AN EXIT ACCESS CORRIDOR IS MORE THAN 100 FEET OR THE LISTED VIEWING DISTANCE OF THE SIGN, WHICHEVER IS LESS, FROM THE NEAREST VISIBLE EXIT SIGN.
2. EXIT SIGNS SHALL BE ILLUMINATED AT ALL TIMES. TO ENSURE CONTINUED ILLUMINATION FOR A DURATION OF NOT LESS THAN 90 MINUTES IN CASE OF PRIMARY POWER LOSS, SIGN ILLUMINATION MEANS SHALL BE CONNECTED TO AN EMERGENCY POWER SYSTEM PROVIDED FROM STORAGE BATTERIES, INIT EQUIPMENT OR AN ON-SITE GENERATOR.
3. PROVIDE SIGNAGE NOTING THE FLOOR NUMBER INSIDE THE STAIRWAY AT EACH LANDING LOCATED FIVE FEET ABOVE THE FLOOR LANDING IN A POSITION THAT IS READILY VISIBLE WHEN THE DOOR IS IN THE OPEN OR CLOSED POSITION.
4. TACTILE SIGNAGE SHALL BE LOCATED AT EACH DOOR INTO AN EXIT STAIR ENCLOSURE, AND SUCH SIGNAGE SHALL READ AS FOLLOWS: "EXIT". SIGNAGE SHALL COMPLY WITH CABO/ANSI A117.1, AMERICAN NATIONAL STANDARD FOR ACCESSIBLE AND USEABLE BUILDINGS AND FACILITIES, AND SHALL BE IN STALLED ADJACENT TO THE LATCH SIDE OF THE DOOR 60" ABOVE THE FINISHED FLOOR TO THE CENTERLINE OF THE SIGN. (SECTION 7.10.1.3, NFPA 101, 2003 EDITION)

VICINITY PLAN

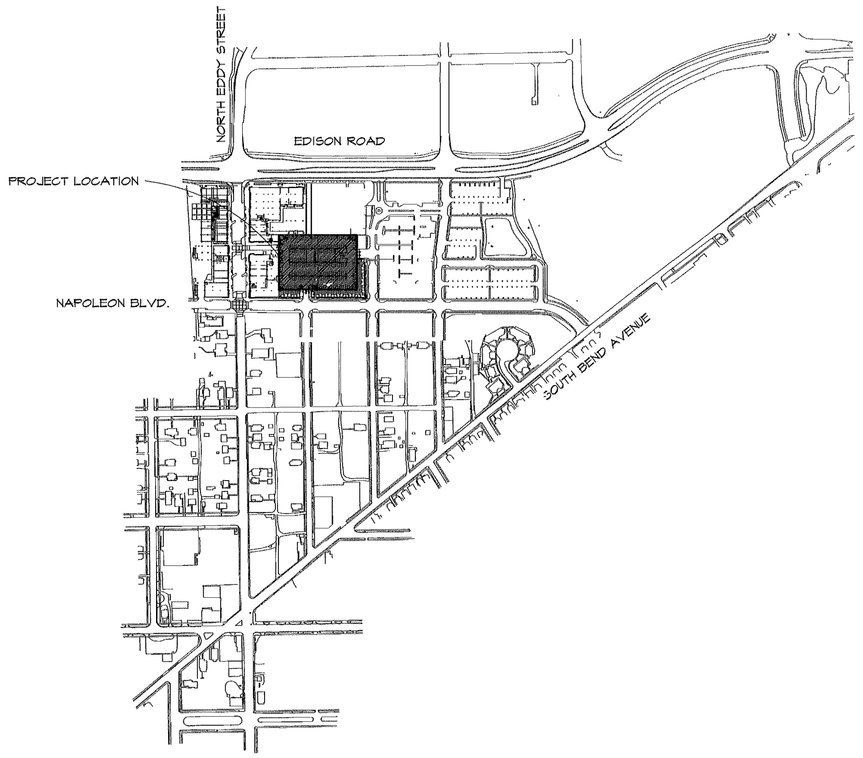

N.T.S.

ARCHITECTURAL ABBREVIATION LEGEND

ABV	ABOVE	DBL	DOUBLE	HP	HIGH POINT	PT	PAINT(ED)	SUSP	SUSPENDED
AFF	ABOVE FINISHED FLOOR	DH	DOUBLE HUNG	HC	HOLLOW CORE	PR	PAIR	SYM	SYMMETRICAL
ANC	ACCENT WALLCOVERING	DN	DOWN	HM	HOLLOW METAL	PNL	PANEL	SYNTH	SYNTHETIC
ACC	ACCESS / ACCESSIBLE	DS	DOWNSPOUT	HB	HOSE BIB	PKNG	PARKING	SYS	SYSTEM
ACFL	ACCESS FLOOR	DWR	DRAWER	HORIZ	HORIZONTAL	PTN	PARTITION	STC	SOUND TRANS-MISSION CLASS
AP	ACCESS PANEL	DWG	DRAWING	INCL	INCLUDE(D)	PVMT	PAVEMENT		
ACOST	ACOUSTICAL	DF	DRINKING FOUNTAIN	ID	INSIDE DIAMETER	PED	PEDESTAL	TEL	TELEPHONE
ACT	ACOUSTICAL (CLG) TILE	EA	EACH	INSUL	INSULATE / INSULATION	PERF	PERFORATE	TV	TELEVISION
ACMC	ACOUSTIC WALLCOVERING	EDFT	ELECTRIC DRINKING FOUNTAIN	INT	INTERIOR	PLAS	PLASTIC	TEMP	TEMPORARY / TEMPERATURE
ADJ	ADJACENT	EWC	ELECTRIC WATER COOLER	INV	INVERT	PL	PLATE	TMPD	TEMPERED
ADJ	ADJUSTABLE	ELEC	ELECTRIC	JT	JOINT	PLAS	PLASTER	TFCI	TENANT FURNISHED CONTRACTOR INSTALLED
AGGR	AGGREGATE	EPB	ELECTRIC PANELBOARD	JST	JOIST	PLAM	PLASTIC LAMINATE		
ALT	ALTERNATE	EMER	EMERGENCY	J-BOX	JUNCTION BOX	PL GL	PLATE GLASS	TFTI	TENANT FURNISHED TENANT INSTALLED
ALUM	ALUMINUM	EL	ELEVATION	KPL	KICKPLATE	PLYWD	PLYWOOD		
ANC	ANCHOR / ANCHORAGE	ELEV	ELEVATOR	KIT	KITCHEN	PT	POINT	THK	THICK(NESS)
AB	ANCHOR BOLT	ENCL	ENCLOSURE	KO	KNOCKOUT	PVC	POLYVINYL CHLORIDE	THRES	THRESHOLD
ANOD	ANODIZED	EQ	EQUAL	LAM	LAMINATE	PCF	POUNDS PER CUBIC FOOT	TINT	TINTED
APPROX	APPROXIMATE	EQUIP	EQUIPMENT	LAV	LAVATORY	PLF	POUNDS PER LINEAR FOOT	TYP	TYPICAL
ARCH	ARCHITECT(URAL)	ESCAL	ESCALATOR	LB	LAG BOLT	PSF	POUNDS PER SQUARE FOOT	TPD	TOILET PAPER DISPENSER
AD	AREA DRAIN	EXIST	EXISTING	LH	LEFT HAND	PSI	POUNDS PER SQUARE INCH	TOL	TOLERANCE
AUTO	AUTOMATIC	EJ	EXPANSION JOINT	L	LENGTH	PT	PORCELAIN TILE	T&G	TONGUE AND GROOVE
BSMT	BASEMENT	EXP	EXPOSED	LT	LIGHT	PL	PROPERTY LINE	TOS	TOP OF SLAB
BRG	BEARING	EXT	EXTERIOR	LT WT	LIGHT WEIGHT	QT	QUARRY TILE	TOST	TOP OF STEEL
BRG PL	BEARING PLATE	FWC	FABRIC WALL COVERING	LTL	LINTEL	R	RADIUS	TOW	TOP OF WALL
BM	BENCH MARK	FOC	FACE OF CONCRETE	LL	LIVE LOAD	REF	REFERENCE	TOC	TOP OF CURB / CONCRETE
BITUM	BITUMINOUS	FOF	FACE OF FINISH	LVR	LOUVER	REFR	REFRIGERATOR		
BLK	BLOCK(ING)	FOM	FACE OF MASONRY	MH	MANHOLE	REINF	REINFORCED	TB	TOWEL BAR
BD	BOARD	FOS	FACE OF STUDS	MFR	MANUFACTURE(ER)(ING)	REQD	REQUIRED	T	TREAD
BOC	BOTTOM OF CURB	FF	FINISH FLOOR	MAS	MASONRY	RCP	REINFORCED CONCRETE PIPE	UNFIN	UNFINISHED)
BLDG	BUILDING	FIN	FINISH	MO	MASONRY OPENING	RESIL	RESILIENT	UNO	UNLESS NOTED OTHERWISE
BUR	BUILT UP ROOF	FE	FIRE EXTINGUISHER	MATL	MATERIAL	RET	RETURN	UR	URINAL
CAB	CABINET	FEC	FIRE EXTINGUISHER CABINET	MAX	MAXIMUM	RA	RETURN AIR	VJ	VINEL JOINT
CPT	CARPET	FHS	FIRE HOSE STATION	MECH	MECHANICAL	RVS	REVERSE	VAR	VARNISH
CPB	CARPET BASE	FPL	FIREPLACE	MED	MEDIUM	REV	REVISION	VNR	VENEER
CPD	CARPET PAD	FG	FIXED GLASS	MEMB	MEMBERANE	RH	RIGHT HAND	VERT	VERTICAL
CSMT	CASEMENT	FPG	FABRIC WALL	MTL	METAL	ROW	RIGHT OF WAY	VEST	VESTIBULE
CB	CATCH BASIN	FLEX	FLEXIBLE	MTFR	METAL FURRING	R	RISER	VERT	VERTICAL
CTR	CENTER	FLR	FLOOR	M	METER	RD	ROOF DRAIN	VCT	VINYL COMPOSITION TILE
CLG	CEILING	FD	FLOOR DRAIN	MM	MILLIMETER	RFG	ROOFING		
CLG HT	CEILING HEIGHT	FCO	FLOOR CLEANOUT	MIN	MINIMUM	RM	ROOM	VP	VINYL FLOORING
CM	CENTIMETER	FTG	FOOTING	MIR	MIRROR	RO	ROUGH OPENING	VWC	VINYL WALL COVERING
CER	CERAMIC	FDTN	FOUNDATION	MISC	MISCELLANEOUS	RB	RUBBER BASE	VB	VINYL BASE
CT	CERAMIC TILE	FUR	FURRING/FURRED	MOD	MODULAR (MODULE)	RSH	RUBBER SHOE	PAINT	PAINT/COT
CWT	CERAMIC WALL TILE	FR	FRAME	MTD	MOUNTED	RUG	RUGS	WT	WALL TILE
CLO	CLOSET	FS	FULL SIZE	MOV	MOVABLE	SCHED	SCHEDULE	WC	WATER CLOSET
COL	COLUMN	GA	GAUGE	MULL	MULLION	SECT	SECTION	WWF	WELDED WIRE FABRIC
CIR	CIRCLE	GALV	GALVANIZED	NAT	NATURAL	SHT	SHEET	WDW	WINDOW
CONC	CONCRETE	GC	GENERAL CONTRACTOR	NRC	NOISE REDUCTION COEFFICIENT	SHT GL	SHEET GLASS	WO	WITHOUT
CMU	CONCRETE MASONRY UNIT	GL	GLASS/GLAZING	NOM	NOMINAL	SHWR	SHOWER	WH	WATER HEATER
CONT	CONTINUOUS/CONTINUE	GD	GRADE/GRADING	NFHB	NON FREEZE HOSE BIB	SIM	SIMILAR	WGL	WIRED GLASS
CORR	CORRIDOR	GYP	GYPSUM BOARD	NIC	NOT IN CONTRACT	SB	SOLID SURFACE	WM	WIRE MESH
CPCI	CONTRACTOR FURNISHED CONTRACTOR INSTALLED	GYP BD	GYPSUM BOARD	NTS	NOT TO SCALE	SPKR	SPEAKER	WD	WOOD
CJ	CONTROL JOINT	HH	HANDHOLE	OC	ON CENTER	SPEC	SPECIFICATION	WB	WOOD BASE
CU FT	CUBIC FOOT	HDBD	HARD BOARD	OPNG	OPENING	SQ	SQUARE	WT	WEIGHT
CU YD	CUBIC YARD	HDWR	HARDWARE	OPP	OPPOSITE	SF	SQUARE FEET	WPT	WORKING POINT
DL	DEAD LOAD	HDR	HEADER	OD	OUTSIDE DIAMETER	SST	STAINLESS STEEL		
DTL	DETAIL	HTG	HEATING	OPH	OPPOSITE HAND	SS	SANITARY SEWER	℄	CENTER LINE
DIAG	DIAGONAL	HVAC	HEATING / VENTILATION / AIR CONDITIONING	OA	OVERALL	STD	STANDARD	©	CHANNEL
DIA	DIAMETER			OH	OVERHEAD (OVERHANG)	STA	STATION	PL	PLUS OR MINUS
DIM	DIMENSION	HT	HEIGHT	OPCI	OWNER FURNISHED CONTRACTOR INSTALLED	ST	STEEL	±	PLUS OR MINUS
DEPT	DEPARTMENT	HEX	HEXAGON(AL)	OPOI	OWNER FURNISHED OWNER INSTALLED	STOR	STORAGE	℄	PROPERTY LINE
DISP	DISPENSER					STRUCT	STRUCTURAL		

MATERIAL LEGEND

EARTH
CONCRETE
STEEL / METALS
C.M.U. SMALL SCALE
C.M.U. LARGE SCALE
COMMON BRICK SMALL SCALE
COMMON BRICK LARGE SCALE
STONE VENEER
GYPSUM BOARD SMALL SCALE
GYPSUM BOARD LARGE SCALE
FINISH WOOD
CONTINUOUS WOOD BLOCKING
NON-CONTINUOUS WOOD BLOCKING
PLYWOOD
STUCCO / PLASTER
BATT INSULATION
RIGID INSULATION
FOAM TRIM
GRAVEL FILL

ARCHITECTURAL SYMBOLS

DRAWING TITLES:
DRAWING NUMBER
TITLE
SCALE B01S141

SECTION MARKERS:
SECTION NUMBER
SHEET NUMBER

DETAIL AND PLAN MARKERS:
DETAIL NUMBER
SHEET NUMBER

ELEVATION MARKERS:
ELEVATION NUMBER(S)
SHEET NUMBER

COLUMN AND GRID SYSTEM:

NORTH ARROW

SYMBOLS:
DOOR MARK
WINDOW MARK
KEY NOTE
WALL TYPE MARK
FIRE EXTINGUISHER
VERTICAL ELEVATION MARK
REVISION MARK
251.10 EXISTING SPOT ELEVATION
251.10 NEW SPOT ELEVATION

FINK ROBERTS & PETRIE INC
Consulting Engineers
Indianapolis, Indiana 46268

Eddy Street Commons
Phase II
Parking Garage
Project Number 108-004

Owner
City of South Bend, Indiana

Construction Manager
Kite Realty Group
30 South Meridian Street, Suite 1100
Indianapolis, Indiana 46204
317-577-5600

Structural Engineer
Fink, Roberts & Petrie, Inc.
4910 Vincennes Circle, Suite 300
Indianapolis, Indiana 46268
317-873-8400

Architect
Looney Ricks Kiss
175 Toyota Plaza, Suite 600
Memphis, Tennessee 38103
901-521-1440

Mechanical, Electrical & Plumbing Engineer
Circle Design Group
5510 South East Street, Suite F
Indianapolis, Indiana 46227
317-781-6200

Parking Consultant
Walker Parking Consultants
6602 East 75th Street, Suite 210
Indianapolis, Indiana 46250
317-842-6890

Civil Engineer/Landscape Architect
The Troyer Group
550 Union Street
Mishawaka, Indiana 46554
574-259-9976

100% Construction Documents
January 23, 2008

REVISION DATE | REVISION DESCRIPTION

PRICE CAMERON CLINE REGISTERED No. 10500058 STATE OF INDIANA ARCHITECT
CERTIFIED BY
1-23-08

DESIGN DATE: 01/23/08
DESIGN PROJECT NO.: 07097
DESIGN DRAWN BY: JH
CHECKED BY: JH

SHEET TITLE
GENERAL NOTES
ABBREVIATIONS AND SYMBOLS
VICINITY MAP

SHEET NO.
A000

PARKING DATA

GARAGE LEVEL	TOTAL SPACES PROVIDED	ACCESSIBLE SPACES REQUIRED (PER IC 5-16-9-2)	ACCESSIBLE SPACES PROVIDED (INCL. IN TOTAL)
BASEMENT LEVEL [INCLUDES RAMP UP] (RESERVED FOR FUTURE HOTEL)	279	7 SPACES (1 VAN ACCESSIBLE)	7 SPACES (4 VAN ACCESSIBLE)
FIRST LEVEL [INCLUDES RAMP UP] (GENERAL ACCESS PARKING)	214	14 SPACES TOTAL OVER ALL THREE LEVELS (2 VAN ACCESSIBLE)	5 SPACES (2 VAN ACCESSIBLE)
SECOND LEVEL [INCLUDES RAMP UP] (GENERAL ACCESS PARKING)	266		5 SPACES (2 VAN ACCESSIBLE)
THIRD LEVEL (GENERAL ACCESS PARKING)	216		5 SPACES (2 VAN ACCESSIBLE)
FOURTH LEVEL [INCLUDES RAMP DOWN] (RESERVED FOR FUTURE RESIDENTIAL)	278	7 SPACES (1 VAN ACCESSIBLE)	7 SPACES (3 VAN ACCESSIBLE)
TOTAL	**1253**	**28 (4 VAN ACCESSIBLE)**	**29 SPACES (13 VAN ACCESSIBLE)**

SITE GENERAL NOTES

SITE

1. THE ARCHITECTURAL REFERENCE SITE PLAN GRAPHICALLY INDICATES THE APPROXIMATE LOCATIONS OF THE IMPROVEMENTS. REFER TO CIVIL/STRUCTURAL ENGINEER'S PLANS FOR ALL HORIZONTAL DIMENSIONAL CONTROL.
2. VERIFY ALL SITE DIMENSIONS, CONDITIONS, EXISTING CONSTRUCTION, EXISTING GRADES, AND TREE LOCATIONS ON PROJECT AND CONTRACT DOCUMENTS AT PROJECT SITE PRIOR TO BEGINNING CONSTRUCTION. ADVISE THE OWNER AND ARCHITECT OF ANY RECOMMENDED MODIFICATIONS PRIOR TO THE START OF ANY WORK.
3. THE GENERAL CONTRACTOR SHALL LOCATE ALL UTILITY SERVICES (WATER, SEWER, GAS, ELECTRIC, TELEPHONE, CABLE TV) AND COORDINATE THE EXTENSIONS TO THE BUILDINGS. ALL CONNECTIONS, METERS, CLEAN OUTS, ETC., SHALL BE LOCATED IN AREAS APPROVD BY ARCHITECT.
4. FOUNDATION WALLS OR BEAMS SHALL EXTEND ABOVE THE FINISHED GRADE A MINIMUM OF 4 INCHES WHERE MASONRY VENEER IS USED AND A MINIMUM OF 6 INCHES ELSEWHERE.
5. THE GENERAL CONTRACTOR SHALL COORDINATE FINAL GRADING AND PAVING AS REQUIRED FOR POSITIVE DRAINAGE AWAY FROM ALL BUILDINGS.
6. ALL INFORMATION RELATED TO THE SITE PROPERTY HAS BEEN PROVIDED BY THE OWNERS SURVEYOR

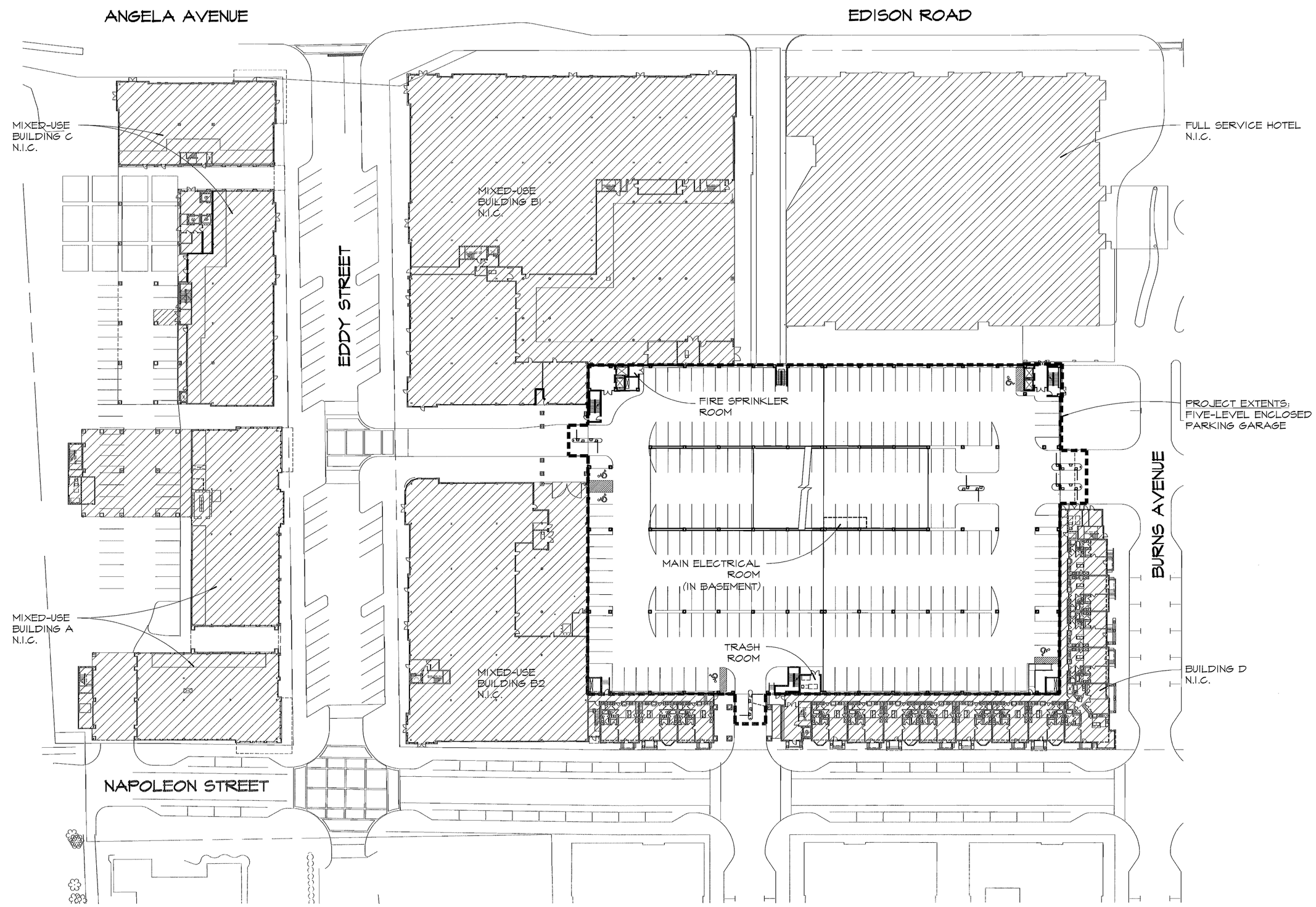

TRUE PLAN ① SITE PLAN
1" = 40'-0"

0 20' 40' 80' 120'

B0710001

FINK ROBERTS & PETRIE, INC.
Consulting Engineers
4040 Vincennes Circle, Suite 300
Indianapolis, Indiana 46268

Eddy Street Commons
Phase II
Parking Garage
Project Number 108-004

Owner
City of South Bend, Indiana

Construction Manager
Kite Realty Group
30 South Meridian Street, Suite 1100
Indianapolis, Indiana 46204
317-577-5650

Structural Engineer
Fink, Roberts & Petrie, Inc.
4040 Vincennes Circle, Suite 300
Indianapolis, Indiana 46268
317-872-8400

Architect
Looney Ricks Kiss
175 Toyota Plaza, Suite 600
Memphis, Tennessee 38103
901-521-1440

Mechanical, Electrical & Plumbing Engineer
Circle Design Group
5510 South East Street, Suite F
Indianapolis, Indiana 46227
317-781-6200

Parking Consultant
Walker Parking Consultants
6602 East 75th Street, Suite 210
Indianapolis, Indiana 46250
317-842-6890

Civil Engineer/Landscape Architect
The Troyer Group
550 Union Street
Mishawaka, Indiana 46554
574-259-0976

100% Construction Documents
January 23, 2008

REVISION DATE | REVISION DESCRIPTION

CERTIFIED BY
PAUL CAMERON CLINE
REGISTERED
No. 10500056
STATE OF
INDIANA
ARCHITECT
1-23-08

DESIGN DATE: 01/23/08
DESIGN PROJECT NO.: 07097
DESIGN DRAWN BY: JPH
CHECKED BY: JPH

SHEET TITLE: REFERENCE SITE PLAN

SHEET NO.: A001

CODE SUMMARY:

I. PROJECT TYPE

A. General Description:
Four story, mechanically ventilated parking garage, plus one additional below-grade parking level. Garage is partially enclosed by adjacent future mixed-use buildings (NIC).

II. LOCAL AUTHORITIES AND APPLICABLE CODES ENFORCED

A. City of South Bend, St. Joseph County, Indiana Enforces:
- 2000 International Building Code with Indiana Amendments
- 2000 International Mechanical Code with Indiana Amendments
- 2000 International Fuel Gas Code with Indiana Amendments
- 1992 CABO Model Energy Code with Indiana Amendments
- 2005 NFPA 70 National Electrical Code with Indiana Amendments
- 1997 Uniform Plumbing Code with Indiana Amendments
- Accessibility: 2003 Indiana Building Code - Chapter 11, Accessibility
- 2000 International Fire Code with Indiana Amendments

III. ZONING

A. Zoning Designation: PUD Area 1 - Retail/Office/Multifamily

B. Section 21-03.02: MU - Mixed Use District of the South Bend Zoning Ordinance

IV. USE AND OCCUPANCY

A. Occupancy Type: Low-Hazard Storage S-2 (Parking Garage)

B. Occupancy Load (per IBC table 1003.2.2.2)

	Floor Area	Factor	Occ.
Basement	87,917	200 (g)	440
First Floor:	87,917	200 (g)	440
Second Floor:	87,917	200 (g)	440
Third Floor:	87,917	200 (g)	440
Fourth Floor:	87,917	200 (g)	440
Totals:	439,585	-	2,200

C. Occupancy Separation Required (per IBC 302.3.3): 2 hour separation

V. BUILDING DATA

A. HEIGHT

Total Height above Grade Plane: 46'

Total Height: 58'

Allowable Height (T 503): 160' above Grade plane

Allowable Height Increase:
(504.2 Automatic Sprinkler Increase) + 20':
160'+20' = 180'

B. STORIES

Number of Stories: 5

Allowable Stories: 7

Allowable Stories Increase:
(504.2 Automatic Sprinkler Increase)
+1 Floor: 7 + 1= 8 Floors

C. AREA

Square Footage:

Basement	87,917 gsf
First Floor:	87,917 gsf
Second Floor:	87,917 gsf
Third Floor:	87,917 gsf
Fourth Floor:	87,917 gsf
Total:	439,585 gsf

Allowable Area (T 503): 79,000 sf per Floor
Allowable Area Increase:
(506.3 Automatic Sprinkler Increase)
79,000 sf + (79,000 sf x 2) = 237,000 sf

VI. TYPES OF CONSTRUCTION

A. TYPE I-B:

B. FIRE RESISTANCE RATINGS (Table 601)

Structural Frame:	2 hr
Exterior Bearing Walls:	2 hrs
Interior Bearing Walls:	2 hr
Nonbearing Exterior Walls:	See below.
Nonbearing walls and partitions:	0 hrs
Floor Construction (including beams and joists):	2 hr
Roof Construction:	1 hr

C. FIRE RESISTANCE RATINGS EXTERIOR WALLS BASED ON FIRE SEPARATION DISTANCE (Table 602)

X < 30' = 1 hrs

X ≥ 30' = 0 hrs

VII. FIRE RESISTANCE RATED CONSTRUCTION

A. MINIMUM FIRE RESISTANCE RATINGS

Stairs and Elevator Enclosures:	2 hrs
Vertical Shafts connecting 4 stories:	2 hrs
Corridors (Per IBC table 1017.1):	0 hrs

VIII. MEANS OF EGRESS

RE: LIFE SAFETY PLANS A002

A. EXIT WIDTH for STAIRS (Per IBC):

Occupant Load	Factor	Req'd Width
440	0.2	88" per floor

B. EXIT WIDTH FOR LEVEL EXITS (Per IBC):

Occupant Load	Factor	Req'd Width
440	.15	66" per floor

C. EXIT ACCESS TRAVEL DISTANCE
Per IBC 1004.2.4: 400'

D. CORRIDORS (per IBC 1004):
Rating Required : 0 Hrs
Width: 44" min.

E. Dead End Limit (IBC 1004.3.2.3): 20'

F. NUMBER OF EXITS AND CONTINUITY (per IBC):
Minimum number of Exits:

<500 people	2 exits
501-1000 people	3 exits
>1000 people	4 exits

G. ARRANGEMENT OF EXITS
Required distance between exits shall be not less than 1/2 the diagonal dimension of the building or space being served in a building protected throughout by an approved automatic sprinkler system.

H. VERTICAL EXIT ENCLOSURES:
Interior exit stairs:
Serving 4+ floors: 2 hrs enclosure req'd

I. Common Path of Travel:
Per IBC Section 1004.2.5: 100'

LEGEND

- 110 / 2000 — ACTUAL OCCUPANT LOAD / LEVEL EXIT CAPACITY (WIDTH / 0.15)
- 217 / 220 — ACTUAL OCCUPANT LOAD / STAIR EXIT CAPACITY (WIDTH / 0.2)
- FE C — FIRE EXTINGUISHER C=CABINET B=BRACKET
- 110 — PATH OF EGRESS / OCCUPANT LOAD ALONG PATH
- TWO (2) HOUR RATED ASSEMBLY

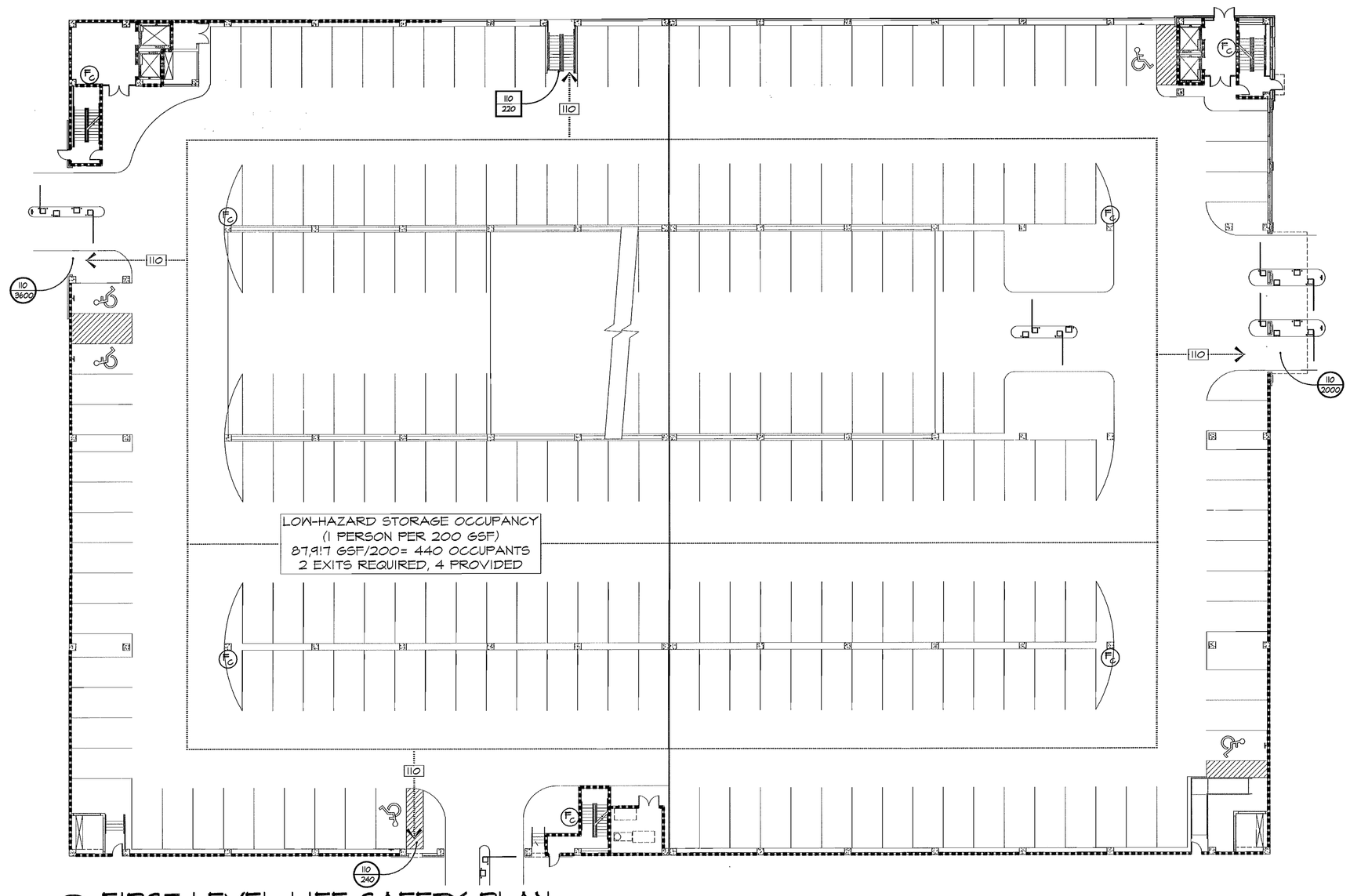

1 FIRST LEVEL LIFE SAFETY PLAN
1" = 20'-0"

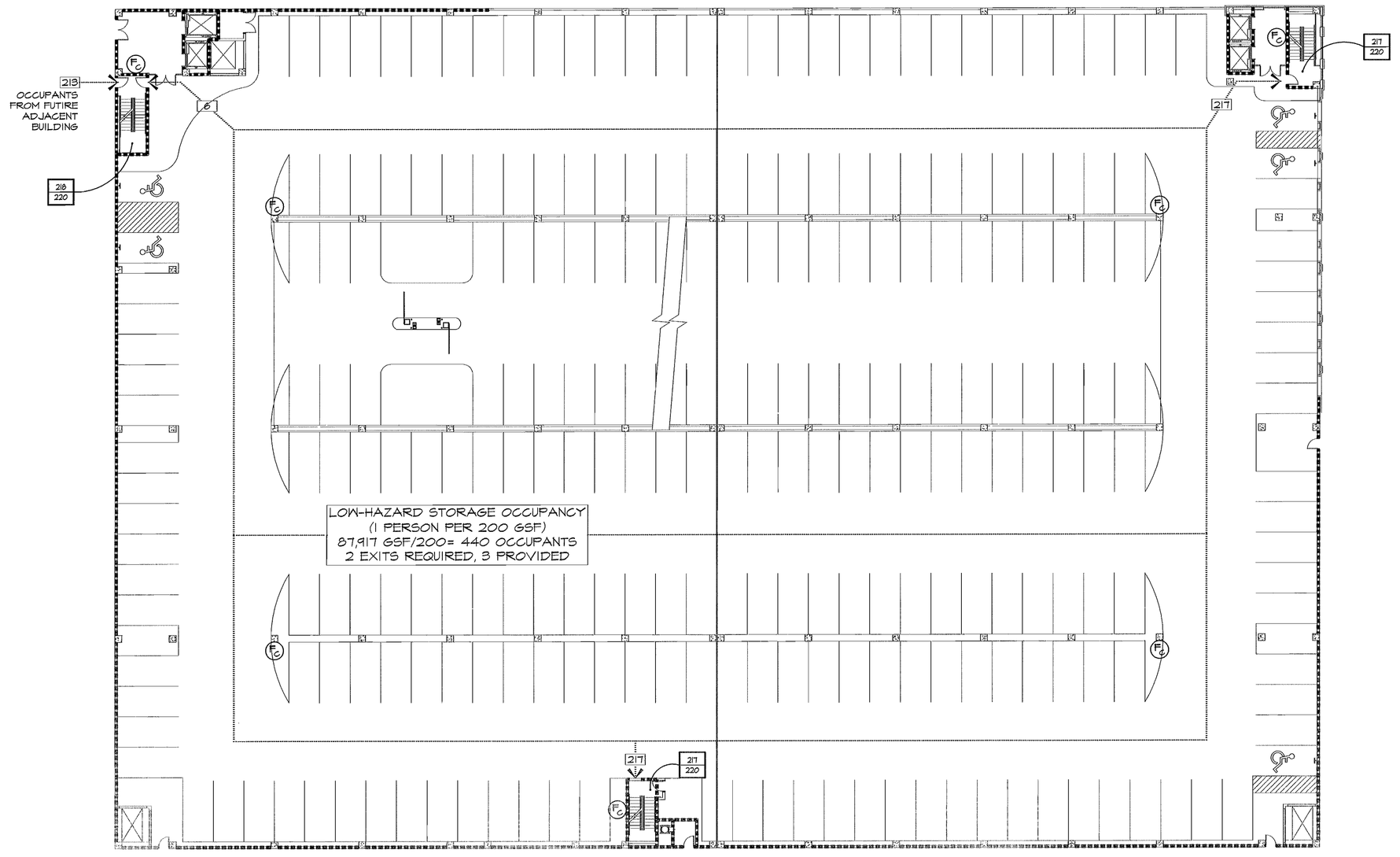

2 TYPICAL LEVEL LIFE SAFETY PLAN
1" = 20'-0"

FINK ROBERTS & PETRIE, INC.
Consulting Engineers
4040 Vincennes Circle, Suite 300
Indianapolis, Indiana 46268

Eddy Street Commons
Phase II
Parking Garage
Project Number 108-004

Owner
City of South Bend, Indiana

Construction Manager
Kite Realty Group
30 South Meridian Street, Suite 1100
Indianapolis, Indiana 46204
317-577-5600

Structural Engineer
Fink, Roberts & Petrie, Inc.
4040 Vincennes Circle, Suite 300
Indianapolis, Indiana 46268
317-872-8400

Architect
Looney Ricks Kiss
175 Toyota Plaza, Suite 600
Memphis, Tennessee 38103
901-521-1440

Mechanical, Electrical & Plumbing Engineer
Circle Design Group
5510 South East Street, Suite F
Indianapolis, Indiana 46227
317-784-6200

Parking Consultant
Walker Parking Consultants
6602 East 75th Street, Suite 210
Indianapolis, Indiana 46250
317-842-6890

Civil Engineer/Landscape Architect
The Troyer Group
550 Union Street
Mishawaka, Indiana 46554
574-259-0976

100% Construction Documents
January 23, 2008

REVISION DESCRIPTION

REVISION DATE

CERTIFIED BY
JAMES H. HEIDENREICH
REGISTERED
No. 10500056
STATE OF
INDIANA
ARCHITECT
1-23-08

DESIGN DATE 01/23/08
DESIGN PROJECT NO. 07097
DESIGN DRAWN BY JH
CHECKED BY JH

SHEET TITLE
CODE SUMMARY

SHEET NO.
A002

CONSTRUCTION ASSEMBLIES

Design No. U905
March 17, 2004
Bearing Wall Rating - 2 HR.
Nonbearing Wall Rating - 2 HR.

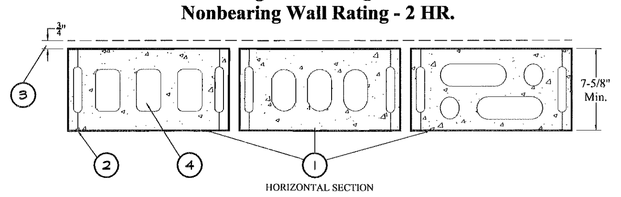

HORIZONTAL SECTION

1. **Concrete Blocks*** - Various designs. Classification D-2 (2 hr).

See **Concrete Blocks** category for list of eligible manufacturers.

2. **Mortar** - Blocks laid in full bed of mortar, nom. 3/8 in. thick, of not less than 2-1/4 and not more than 3-1/2 parts of clean sharp sand to 1 part Portland cement (proportioned by volume) and not more than 50 percent hydrated lime (by cement volume). Vertical joints staggered.

3. **Portland Cement Stucco or Gypsum Plaster** - Add 1/2 hr to classification if used. Where combustible members are framed in wall, plaster or stucco must be applied on the face opposite framing to achieve a max. Classification of 1-1/2 hr. Attached to concrete blocks (Item 1).

4. **Loose Masonry Fill** - If all core spaces are filled with loose dry expanded slag, expanded clay or shale (Rotary Kiln Process), water repellant semicaltie masonry fill insulation, or silicone treated perlite loose fill insulation add 2 hr to classification.

5. **Foamed Plastic*** - (Optional-Not Shown) - 1-1/2 in. thick max, 4 ft wide sheathing attached to concrete blocks (Item 1).

THE DOW CHEMICAL CO - Type Thermax

*Bearing the UL Classification Mark

Last Updated on 2004-03-17
Reprinted from the Online Certifications Directory with permission from Underwriters Laboratories Inc. Copyright © 2007 Underwriters Laboratories Inc.®

(1) C.M.U. WALL
N.T.S. U.L. U905 - 2 HOUR

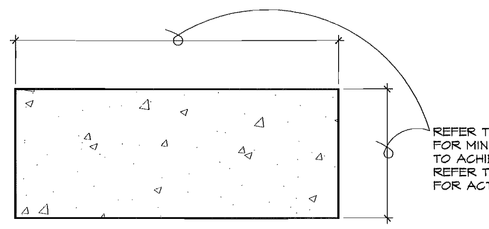

TABLE 720.2.4
MINIMUM DIMENSION OF CONCRETE COLUMNS (inches)

TYPES OF CONCRETE	FIRE RESISTANCE RATING (hours) 1	1½	2ª	3ª	4ª
Silicous	8	9	10	12	14
Carbonate	8	9	10	11	12
Sand-lightweight	8	8½	9	10½	12

a. The minimum dimension is permitted to be reduced to 8 inches for rectangular columns with two parallel sides at least 36 inches in length.

b. The minimum dimension is permitted to be reduced to 10 inches for rectangular columns with two parallel sides at least 36 inches in length.

(2) CONCRETE COLUMN
N.T.S. INTERNATIONAL BUILDING CODE TABLE 720.2.4 - 2 HOUR

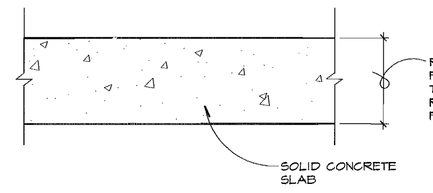

TABLE 719.1(3)
MINIMUM PROTECTION FOR FLOOR AND ROOF SYSTEMS

FLOOR OR ROOF CONSTRUCTION	ITEM NUMBER	CEILING CONSTRUCTION	THICKNESS OF FLOOR OR ROOF SLAB (inches) 4 hour	3 hour	2 hour	1 hour
1. Siliceous aggregate concrete	1-1.1	Slab (no ceiling required). Minimum cover over nonprestressed reinforcement shall not be less than ¾ inch.	7.0	6.2	5.0	3.5
2. Carbonate aggregate concrete	2-1.1		6.6	5.7	4.6	3.2
3. Sand-lightweight concrete	3-1.1		5.4	4.6	3.8	2.7
4. Lightweight concrete	4-1.1		5.1	4.4	3.6	2.5

(3) GARAGE FLOOR/ CEILING ASSEMBLY
N.T.S. INTERNATIONAL BUILDING CODE TABLE 719.1(3) - 2 HOUR

Design No. P732
January 04, 2008
Restrained Assembly Ratings - 1, 1-1/2, 2 or 3 Hr (See Item 10)
Unrestrained Assembly Ratings - 3/4, 1, 1-1/2, 2 or 3 Hr (See Item 10)
Unrestrained Beam Ratings - 1, 1-1/2, 2 or 3 Hr (See Item 10)
Restricted Load Condition - See Items 1 and 10C

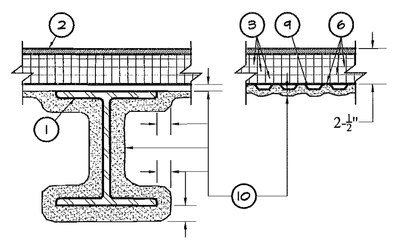

1. **Beam** - Min W8x28 or Steel Joist - 10K1 or 16K2 min size with a max tensile stress of 30,000 psi or 12K3 or 12K5 min size with a max tensile stress of 24,000 psi.

2. **Roof Covering*** - Consisting of hot mopped or cold application bituminous materials compatible with the insulation(s) described herein which provide Class A, B or C coverings. See Roofing Materials and Systems Directory - Roof Covering Materials (TEVT).

2A. **In lieu of Item 2, roof covering consisting of single-ply Roofing Membrane*** - that is either ballasted, adhered or mechanically attached as permitted under the respective manufacturer's Classification. See Fire Resistance Directory - Roof Membrane (CHCI).

2B. **Metal Roof Deck Panels*** - (Not shown) - In addition to or in lieu of Item 2 or 2A, the roof covering may consist of a mechanically fastened metal roof deck panel assembly. See Fire Resistance Directory - Metal Roof Deck Panels (CEIW).

3. **Roof Insulation - Foamed Plastic** - Polyisocyanurate foamed plastic insulation boards nom 48 by 48 or 96 in., to be applied in one or more layers. Boards to be installed with end joints staggered a min of 6 in. Min thickness shall be selected from the Table below. No limit on max overall thickness.

Restrained or Unrestrained Assembly Rating Hr	Min Insulation Thkns In. With Gypsum Wallboard	Without Gypsum Wallboard
1	1	2
1 1/2	1 1/2	2
2	2	3
3	3	4

ATLAS ROOFING CORP - Type ACFoam II, ACFoam III
CARLISLE SYNTEC INCORPORATED - Types HP, HP-H, HP-N, HP-W.
THE DOW CHEMICAL CO - Types Hy-Therm AP, Hy-Therm Tapered.
FIRESTONE BUILDING PRODUCTS CO, DIV OF BFS DIVERSIFIED PRODUCTS L L C - "ISO 95+GL", "ISO 300".
GAF MATERIALS CORP - Isotherm R
HUNTER PANELS - H Shield
JOHNS MANVILLE INTERNATIONAL INC - ENRGY 3, ISO-1, PSI 25
LOADMASTER SYSTEMS INC - Type Loadmaster polyisocyanurate insulation
RMAX OPERATING L.L.C - Type Multi-Max-3, Multi-Max FA-3, Ultra-Max.
STEVENS ROOFING SYSTEMS, DIV OF JPS ELASTOMERICS CORP - "Stevens ISO 2000", "Stevens ISO 3000".

3A. **Building Units*** - Not Shown - As an alternate to Item 3, composite polyisocyanurate foamed plastic insulation board with an adhered nailing surface, nom 48 by 48 or 96 in. may be used with the following limitations. These composite building units have ventilation slots internal to the panels. The thickness of the panel depends upon the thinnest portion of the polyisocyanurate insulation. The following dimensions apply to the polyisocyanurate insulation, min thickness is as measured in accordance with Item 3. There is no limit on the max insulation thickness.

GAF MATERIALS CORP - Type INSUL-AIR.
JOHNS MANVILLE INTERNATIONAL INC - Type ISO-VENT.

3B. **Building Units*** - Polyisocyanurate foamed plastic insulation boards, nom 48 by 48 or 96 in., faced on the top surface with oriented strand board. Min thickness of the polyisocyanurate core is 1.3 in. No limit on max overall thickness. Boards to be installed with end joints staggered a min of 6 in. in adjacent rows. Adhesive (Item 6) may be applied between the building units and the vapor retarder (or gypsum wallboard if vapor retarder is not used).

ATLAS ROOFING CORP - ACFoam Nailbase Insulation and Vented R.
FIRESTONE BUILDING PRODUCTS CO, DIV OF BFS DIVERSIFIED PRODUCTS L L C - Nail Base.
MARTIN FIREPROOFING GEORGIA INC - Perform-A-Deck Nailable Roof Insulation.

3C. **Roof Insulation-Mineral and Fiber Boards*** - (Not Shown) - Optional, Applied in one or more layers over the Foamed Plastic (Item 3) to be applied with adhesive (Item 6), asphalt or coal tar pitch (Item 7) or mechanically fastened (Item 8).

JOHNS MANVILLE INTERNATIONAL INC

3D. **Building Units*** - As an alternate to Item 3, polyisocyanurate foamed plastic insulation boards, nom 48 by 48 or 96 in., faced on the top surface with oriented strand board. Min thickness of the polyisocyanurate core is 1.3 in. for the 1 hr rating without gypsum wallboard (Item 4) and for the 1, 1-1/2 and 2 hr ratings with gypsum wallboard and 2.6 for the 1-1/2 hr ratings without gypsum wallboard. No limit on max overall thickness. Boards to be installed with end joints staggered a min of 6 in. in adjacent rows.

JOHNS MANVILLE INTERNATIONAL INC - Nailboard.

3E. **Building Units*** - As an alternate to Item 3, polyisocyanurate foamed plastic insulation boards faced on the underside (or both sides) with mineral fiber board. Min thickness of the polyisocyanurate core is 1.3 in. for the 1 hr rating without gypsum wallboard (Item 4) and for the 1-1/2 and 2 hr ratings with wallboard and 2.6 in. for the 1-1/2 hr ratings without gypsum wallboard. No limit on max overall thickness. Boards to be installed with end joints staggered a min of 6 in. in adjacent rows. Adhesive (Item 6) may be applied between the building units and the vapor retarder (or gypsum wallboard if vapor retarder is not used).

FIRESTONE BUILDING PRODUCTS CO, DIV OF BFS DIVERSIFIED PRODUCTS L L C - "ISO 95+ Composite"
JOHNS MANVILLE INTERNATIONAL INC - Fesco-Foam.

3F. **Building Units*** - As an alternate to Item 3, polyisocyanurate foamed plastic insulation boards faced on the underside with wood fiber board. Min thickness of the polyisocyanurate core is 1.3 in. for the 1 hr rating without gypsum wallboard (Item 4) and for the 1-1/2 and 2 hr ratings with wallboard and 2.6 in. for the 1-1/2 hr ratings without gypsum wallboard. No limit on max overall thickness. Boards to be installed with end joints staggered a min of 6 in. in adjacent rows.

FIRESTONE BUILDING PRODUCTS CO, DIV OF BFS DIVERSIFIED PRODUCTS L L C - "ISO 95+ Composite".
JOHNS MANVILLE INTERNATIONAL INC - ENRGY-2 Plus.

3G. **Building Units*** - As an alternate to Item 3, polyisocyanurate foamed plastic insulation boards, nom 48 by 48 or 96 in., faced on the top surface with gypsum board. Min thickness of the polyisocyanurate core is 1.3 in. for 1 hr rating without gypsum wallboard (Item 4) and for the 1-1/2 and 2 hr ratings with wallboard (Item 4) and 2.6 in. for the 1-1/2 ratings without gypsum wallboard (Item 4). No limit on overall thickness. Boards to be installed with end joints staggered a min of 6 in. in adjacent rows. Adhesive (Item 6) may be applied between the building units and the vapor retarder (or gypsum wallboard if vapor retarder is not used).

JOHNS MANVILLE INTERNATIONAL INC - ENRGY 2 Gypsum Composite.

3H. **Roof Insulation - Mineral and Fiber Boards*** - As an alternate to Item 3 , to be applied in one or more layers with or without adhesive applied between vapor barrier and roof deck units, vapor barrier and board and each layer of board. When more than one layer is required, each layer of board to be offset in both directions from layer below a min of 6 in. in order to lap all joints. Min thickness is 2 in. when Item 2A or 2B is used. Min thickness is 1 in. otherwise.

BMCA INSULATION PRODUCTS INC - Permalite.
FIBREX INSULATIONS INC - FIBX Baseboard and FIBX Cladproof.
GAF MATERIALS CORP - GAFTEMP Perlite.
JOHNS MANVILLE INTERNATIONAL INC

3I. **Roof Insulation - Foamed Plastic*** - (Not Shown) As an alternate to Item 3 through 3H, polystyrene foamed plastic insulation boards, applied in one or more layers over gypsum wallboard. Min. thickness is 1.0 in. with no max overall thickness max density 2.5 pcf. When applied in more than one layer, each layer to be offset in both directions from layer below a min. of 6 in. in order to lap all joints. Boards secured to gypsum wallboard (Item 4) with asphalt glaze coat or adhesive (Item 6). Adhesive and/or asphalt glaze coat may be omitted when Item 2A is used. See Foamed Plastic (BRYX) category in the Building Materials Directory or Foamed Plastic (CCVW) category in the Fire Resistance Directory of for names of manufacturers.

3J. **Fiber, Sprayed*** - (Not Shown) - For 1 hr rating only - As an alternate to Items 3 through 3I, Spray applied cellulose insulation material. The fiber is applied with water to a min. thickness of 10 in. as measured from the top plane of the roof deck in accordance with the application instructions supplied with the product. Minimum density of 2.6 pcf. Gypsum board not required over steel roof deck. Min. 1 in. thickness of Spray-Applied Fire Resistive Materials* (Items 10, 10A, 10B) required on underside of steel deck. When Item 3J is used, Roof Covering (Items 2, 2A and 2B) shall not be directly applied over sprayed fiber.

U S GREENFIBER L L C - Cocoon stabilized cellulose insulation.

3K. **Roof Insulation - Foamed Plastic*** - (Not Shown) - Optional, a minimum of 1/4 in. thick - Placed over minimum 1-1/2 in. thick polyisocyanurate Foamed Plastic (Item 3) to be applied with adhesive (Item 6), asphalt or coat tar pitch (Item 7) or mechanically fatened (Item 8). Boards to be installed with end joints to be offset in both directions from layer below a min of 6 in. in order to lap all joints.

JOHNS MANVILLE INTERNATIONAL INC - Invinsa Roof Board

4. **Gypsum Board** - (Not shown) - (Classified or Unclassified) - May be used to obtain various Restrained or Unrestrained Assembly Ratings as described in Item 10. Supplied in sheets nom 4 by 8 or 12 ft by 5/8 in. thick. Min weight 2.2 psf. Applied perpendicular to steel roof deck direction with end joints staggered 2 ft in adjacent rows. End joints to occur over crests of steel roof units. See **Gypsum Board** (CKNX) category for names of manufacturers.

5. **Vapor Retarder - Sheathing Material*** - (Optional) - (Not shown) - Vinyl film or paper scrim vapor barrier, applied to steel roof deck or gypsum wallboard with adhesive (Item 6), hot asphalt (Item 7) or laid loosely, overlapped approx 2 in. on adjacent sheets. See **Sheathing Material** (CTHZ) category for names of manufacturers.

5A. **Sheathing Material*** - (Optional) - In lieu of Item 5, a self-adhered rubberized asphalt roofing underlayment membrane which may be placed on top of steel roof deck, gypsum wallboard or on the roof insulation.

W R GRACE & CO - CONN - Grace Ice and Water Shield, Grace Select, Grace Ultra, and Grace Husk.

6. **Adhesive* - (Optional)** - The vapor retarder, the gypsum wallboard or the first layer of roof insulation may be secured with adhesive to the steel crest surfaces. Also used to attach the vapor retarder to gypsum wallboard, the first layer of insulation to vapor retarder or gypsum wallboard and each additional layer of insulation. Applied in 1/2 in. wide ribbons 6 in. OC at 0.4 gal/100 sq ft. See **Adhesives** (BYWK) category for names of manufacturers.

6A. **Adhesive* -(Optional)** - - (Bearing the UL Classification Marking for Roof Systems (TGFU)) - When FAST 100 adhesive is used, the Unrestrained Assembly Ratings are limited to 1, 1-1/2 and 2 hr. The vapor retarder, the gypsum wallboard or the first layer of roof insulation may be secured with adhesive to the steel crest surfaces. Also used to attach the vapor retarder to gypsum wallboard, the first layer of insulation to vapor retarder or gypsum wallboard and each additional layer of insulation. Applied at a max rate of 19.8 g/ft2. When FAST 100 adhesive is used, additional **Spray-Applied Fire Resistance Materials* (CHPX)** is required on the deck for the 1-1/2 and 2 hr Unrestrained Assembly Ratings. The thickness specified for the deck shall be increased by 1/16 in. for 1-1/2 hr Unrestrained Assembly Rating and 1/4 in. for 2 hr Unrestrained Assembly Rating.

CARLISLE SYNTEC INCORPORATED - FAST 100

7. **Asphalt or Coal Tar Pitch*** - (Optional) - (Not shown) - The vapor retarder, the gypsum wallboard of the first layer of roof insulation may be secured with asphalt or coal tar pitch to the steel crest surfaces at a max rate of 15 lb/100 sq ft. Also used to attach the vapor retarder to gypsum wallboard, the first layer of insulation to vapor retarder or gypsum wallboard and each additional layer of roof insulation, applied at a max rate of 25 lb/100 sq ft.

8. **Mechanical Fasteners - (Optional)** - (Not shown) - Mechanical screw-type fastener with metal or plastic washer designed for the purpose may be used to attach one or more layers of insulation to steel roof deck.

9. **Steel Roof Deck** - (Unclassified) - Min 1-1/2 in. deep and 36 in. wide galv fluted steel deck. Min gauge is No. 22 MSG. Ends overlapped at supports a min 1-1/2 in. and welded to supports 12 in. OC and at side laps. Side laps fastened with 1/2 in. long hex head, self-drilling, self-tapping steel screws spaced a max of 36 in. OC. **Classified Steel Floor and Form Units*** - Nonacomposite 1-1/2 to 3 in. deep, 24 to 36 in. wide, min 22 MSG galvanized steel fluted units. Ends overlapped at supports a min 1- 1/2 in. and welded to supports 12 in. OC and at side laps. Side laps fastened with 3/4 in. long No. 12 self-drilling, self-tapping steel screws at 36 in. OC. As alternate to screw fasteners adjacent units may be button-punched or welded together 36 in. OC along side joints.

ASC STEEL DECK, DIV OF ASC PROFILES
INC - 24 in. wide Types N-24, DGN-24; 36 in. wide Types B-36, DGH-36.
CANAM STEEL CORP - Types P-3656, P-3615, P-2436, and P-2404 nonacomposite.
VULCRAFT, DIV OF NUCOR CORP - Galv Types 1.5B, 1.5IH, 1.5F, 3N and 3NI, ptd/pld units may be used for ratings up to 2 h.
UNITED STEEL DECK INC - Type B, N. Units may be phos./pid or ptd/pd.
VERCO DECKING INC - A NUCOR CO - Types PLB, 1SIH, PLN and N. Pld/pid units may be used for ratings up to 2 h.
WHEELING-PITTSBURGH STEEL CORP, DIV OF WHEELING CORRUGATING CO - Types BW, F, High Strength B, High Strength BW, N, ptd/pid units may be used for ratings up to 2 h.
Note: Type Z-106 Spray-Applied Fire Resistive Materials to be used with galv steel roof units only.

10. **Spray-Applied Resistive Material*** - Applied by mixing with water and spraying in more than one coat to final thicknesses as shown in the illustration above and in the table below to steel surfaces which must be clean and free of dirt, loose scale and oil. Steel deck surface must be "spatter" coated with Type SK-3 Spray-Applied Fire Resistive Materials prior to application of spray-applied resistive material. Type SK-3 spray-applied resistive material applied in accordance with the manufacturer's application instructions. When steel deck is used the area between the steel deck and the beams top flange shall be filled. Min average and min individual density of 15/14 pcf, respectively. For method of density determination, see Design Information Section. Thickness of the spatter coat is included in the total final thickness of the protection material.

Restrained Assembly Rating Hr	Unrestrained Assembly Rating Hr	Unrestrained Beam Rating Hr	Steel deck thickness # with Gypsum Wallboard	Steel deck thickness # Without Gypsum Wallboard	Beam Thickness full flange W8x28 Beam	Beam Thickness 1/2 Flange f-6 W8x28 Beam
1	3/4	1	N/A	1	7/16	5/16
1	1	1	9/16 ***	1 1/8	7/16	3/8
1	1	1	5/8	1 1/8	7/16	3/8
1	1	1	3/4 *	1 3/8 *	7/16	3/8
1 1/2	1	1	3/4	1 3/4 *	9/16	13/16
1 1/2	1 1/2	1	15/16	1 7/8 *	5/8	13/16
1 1/2	1 1/2	1 1/2	1 1/2 *	2 1/8 *	7/8	1 1/16
2	1 1/2	1 1/2	1 1/2 *	2 1/8 *	7/8	1 1/16
2	2	2	2 *	2 5/8 *	7/8	1 1/16
3	2	2	2 1/2 *	3 1/8 *	1 1/16	1 5/8
3	3	3	3 1/8	3 3/8	1 3/8	1 5/8

The required minimum thickness of Spray-Applied Fire Resistive Materials on the steel deck is increased by 1/16 inch for 1-1/2 hr Un-restrained assembly rating and 1/4 inch for 2 hr Unrestrained Assembly rating when Item 6A is used.
When the thickness applied to the lower flange edges is reduced by one half, the 1/2 flange thickness is applicable.
* No minimum insulation thickness required
***Minimum insulation thickness (Item 3) 2 inches.
@ When the maximum clear span of the steel decking is 5 ft. 2 in. or less, the Unrestrained Assembly Rating is 1-hour.

Restrained Assembly Rating Hr	Unrestrained Assembly Rating Hr	Unrestrained Beam Rating Hr	Joist thickness, 10K1 max than 4 ft OC	10K1 less than 4 ft OC	16K2 max than 4 ft OC	16K2 less than 4 ft OC
1	3/4	1	1 1/16	1	15/16	15/16
1	1	1	1	1	15/16	15/16
1 1/2	1	1	1 3/16	1 1/16	1 1/16	1 1/16
1 1/2	1 1/2	1	1 1/16	1	1	1
2	1 1/2	1 1/2	1 3/16	1 1/16	1 1/16	1 1/16
2	2	2	1 3/16	1 1/16	1 1/16	1 1/16
3	2	2	1 3/16	1 1/16	1 1/16	1 1/16
3	3	3	1 3/16	1 1/16	1 1/16	1 1/16

@ When the maximum clear span of the steel decking is 5 ft. 2 in. or less, the Unrestrained Assembly Rating is 1-hour.

Restrained Assembly Rating Hr	Unrestrained Assembly Rating Hr	Unrestrained Beam Rating Hr	Joist thickness, 10K1 max than 4 ft OC	10K1 less than 4 ft OC	16K2 max than 4 ft OC	16K2 less than 4 ft OC
1	3/4	1	1 1/16	1	15/16	15/16
1	1	1	1	1	15/16	15/16
1 1/2	1	1	1 3/16	1 1/16	1 1/16	1 1/16
1 1/2	1 1/2	1	1 1/16	1	1	1
2	1 1/2	1 1/2	1 3/16	1 1/16	1 1/16	1 1/16
2	2	2	1 3/16	1 1/16	1 1/16	1 1/16
3	2	2	1 3/16	1 1/16	1 1/16	1 1/16
3	3	3	1 3/16	1 1/16	1 1/16	1 1/16

@ When the maximum clear span of the steel decking is 5 ft. 2 in. or less, the Unrestrained Assembly Rating is 1-hour.

Restrained Assembly Rating Hr	Unrestrained Assembly Rating Hr	Unrestrained Beam Rating Hr	W8x16 Beam Thickness
1	3/4	1	5/16
1	1	1	5/16
1 1/2	1	1	5/16
1 1/2	1 1/2	1	5/16
2	1 1/2	1 1/2	5/16
2	2	2	5/16
3	2	2	5/16
3	3	3	5/16

ARAHAN VERMICULITE INDUSTRIES - Types MK-6/HY, MK-6/HY Extended Set, MK-6s, SK-3.
W R GRACE & CO - CONN - Types MK-6/HY, MK-6/HY Extended Set, MK-6s, RG, SK-3.
GRACE KOREA INC - Types MK-6/HY, MK-6/HY Extended Set, MK-6s, SK-3.

10A. **Alternate Spray-Applied Fire Resistive Materials*** - Applied by mixing with water and spraying in one or more coats to final thicknesses as shown in the table below to steel beam surfaces which must be clean and free of dirt, loose scale and oil. When Type Z-106/A is used, the steel deck surface must be "spatter" coated with Type SK-3 Spray-Applied Fire Resistive Materials prior to application of spray-applied resistive material. Type SK-3 spray-applied resistive material applied in accordance with the manufacturer's application instructions. When steel deck is used the area between the steel deck and the beams top flange shall be filled. Min avg and min ind density of 22/19 pcf, respectively. For method of density determination, refer to Design Information Section.

Restrained Assembly Rating Hr	Unrestrained Assembly Rating Hr	Unrestrained Beam Rating Hr	Steel deck thickness # with Gypsum Wallboard	Steel deck thickness # Without Gypsum Wallboard	Beam Thickness full flange W8x28 Beam	Beam Thickness 1/2 Flange f-6 W8x28 Beam
1	3/4	1	N/A	1	7/16	5/16
1	1	1	9/16 ***	1 1/8	7/16	3/8
1	1	1	5/8	1 1/8	7/16	3/8
1	1	1	3/4 *	1 3/8 *	7/16	3/8
1 1/2	1	1	3/4	1 3/4 *	9/16	13/16
1 1/2	1 1/2	1	15/16	1 7/8 *	5/8	13/16
2	1 1/2	1 1/2	1 1/2 *	2 1/8 *	7/8	1 1/16
2	2	2	2 *	2 5/8 *	7/8	1 1/16
3	2	2	2 1/2	3 1/8	1 1/16	1 5/8
3	3	3	3 1/8	3 3/8	1 3/8	1 5/8

The required minimum thickness of Spray-Applied Fire Resistive Materials on the steel deck is increased by 1/16 inch for 1-1/2 hr Un-restrained assembly rating and 1/4 inch for 2 hr Unrestrained Assembly rating when Item 6A is used.
When the thickness applied to the lower flange edges is reduced by one half, the 1/2 flange thickness is applicable.
* No minimum insulation thickness required
***Minimum insulation thickness (Item 3) 2 inches.
@ When the maximum clear span of the steel decking is 5 ft. 2 in. or less, the Unrestrained Assembly Rating is 1-hour.

Restrained Assembly Rating Hr	Unrestrained Assembly Rating Hr	Unrestrained Beam Rating Hr	Joist thickness 10K1 max than 4 ft OC	10K1 less than 4 ft OC	16K2 more than 4 ft OC	16K2 less than 4 ft OC
1	3/4	1	1 1/16	1	15/16	15/16
1	1	1	1	1	15/16	15/16
1 1/2	1	1	1 3/16	1 1/16	1 1/16	1 1/16
1 1/2	1 1/2	1 1/2	1 1/16	1	1	1
2	1 1/2	1 1/2	1 3/16	1 1/16	1 1/16	1 1/16
2	2	2	1 3/16	1 1/16	1 1/16	1 1/16
3	2	2	1 3/16	1 1/16	1 1/16	1 1/16
3	3	3	1 3/16	1 1/16	1 1/16	1 1/16

@ When the maximum clear span of the steel decking is 5 ft. 2 in. or less, the Unrestrained Assembly Rating is 1-hour.

Restrained Assembly Rating Hr	Unrestrained Assembly Rating Hr	Unrestrained Beam Rating Hr	W8x16 Beam Thickness
1	3/4	1	5/16
1	1	1	5/16
1 1/2	1	1	5/16
1 1/2	1 1/2	1	5/16
2	1 1/2	1 1/2	5/16
2	2	2	5/16
3	2	2	5/16
3	3	3	5/16

ARAHAN VERMICULITE INDUSTRIES - Types Z-106, Z-106/HY, Z-106/HY Extended Set, MK-6s, SK-3.
W R GRACE & CO - CONN - Types MK-6/HY, MK-6/HY Extended Set, MK-6s, RG, SK-3.
GRACE KOREA INC - Types MK-6/HY, MK-6/HY Extended Set, MK-6s, SK-3.

10B. **Alternate Spray-Applied Fire Resistive Materials*** - Applied by mixing with water and spraying in one or more coats to final thicknesses as shown in the table below to steel beam surfaces which must be clean and free of dirt, loose scale and oil. When steel deck is used, the area between the steel deck and the beams top flange shall be filled. Application to steel roof deck requires the installation of expanded metal lath. See Item 11A. Min avg and min ind density of 40/36 pcf respectively for Types Z-146, Z-146FC and Z-146FC cementitious mixture. Min avg and min ind density of 50/45 pcf respectively for Types Z-156, Z-156/T and Z-156FC. For method of density determination, refer to Design Information Section.

Restrained Assembly Rating Hr	Unrestrained Assembly Rating Hr	Unrestrained Beam Rating Hr	Steel deck thickness # with Gypsum Wallboard	Steel deck thickness # Without Gypsum Wallboard	Beam Thickness full flange W8x28 Beam	Beam Thickness 1/2 Flange f-6 W8x28 Beam
1	3/4	1	N/A	1	7/16	5/16
1	1	1	9/16 ***	1 1/8	7/16	3/8
1	1	1	5/8	1 1/8	7/16	3/8
1	1	1	3/4 *	1 3/8 *	7/16	3/8
1 1/2	1	1	3/4	1 3/4 *	9/16	13/16
1 1/2	1 1/2	1	15/16	1 7/8 *	5/8	13/16
2	1 1/2	1 1/2	1 1/2 *	2 1/8 *	7/8	1 1/16
2	2	2	2 *	2 5/8 *	7/8	1 1/16
3	2	2	2 1/2	3 1/8	1 1/16	1 5/8
3	3	3	3 1/8	3 3/8	1 3/8	1 5/8

The required minimum thickness of Spray-Applied Fire Resistive Materials on the steel deck is increased by 1/16 inch for 1-1/2 hr Un-restrained assembly rating and 1/4 inch for 2 hr Unrestrained Assembly rating when Item 6A is used.
When the thickness applied to the lower flange edges is reduced by one half, the 1/2 flange thickness is applicable.
* No minimum insulation thickness required
***Minimum insulation thickness (Item 3) 2 inches.
@ When the maximum clear span of the steel decking is 5 ft. 2 in. or less, the Unrestrained Assembly Rating is 1-hour.

Restrained Assembly Rating Hr	Unrestrained Assembly Rating Hr	Unrestrained Beam Rating Hr	Joist thickness 10K1 max than 4 ft OC	10K1 less than 4 ft OC	16K2 more than 4 ft OC	16K2 less than 4 ft OC
1	3/4	1	1 1/16	1	15/16	15/16
1	1	1	1	1	15/16	15/16
1 1/2	1	1	1 3/16	1 1/16	1 1/16	1 1/16
1 1/2	1 1/2	1 1/2	1 1/16	1	1	1
2	1 1/2	1 1/2	1 3/16	1 1/16	1 1/16	1 1/16
2	2	2	1 3/16	1 1/16	1 1/16	1 1/16
3	2	2	1 3/16	1 1/16	1 1/16	1 1/16
3	3	3	1 3/16	1 1/16	1 1/16	1 1/16

@ When the maximum clear span of the steel decking is 5 ft. 2 in. or less, the Unrestrained Assembly Rating is 1-hour.

Restrained Assembly Rating Hr	Unrestrained Assembly Rating Hr	Unrestrained Beam Rating Hr	W8x16 Beam Thickness
1	3/4	1	5/16
1	1	1	5/16
1 1/2	1	1	5/16
1 1/2	1 1/2	1	5/16
2	1 1/2	1 1/2	5/16
2	2	2	5/16
3	2	2	5/16
3	3	3	5/16

ARAHAN VERMICULITE INDUSTRIES - Types Z-106, Z-106/HY, Z-106/HY Extended Set, MK-6s, SK-3.
GRACE KOREA INC - Types Z-106, Z-106/G, Z-106/HY.
W R GRACE & CO - CONN - Types Z-106, Z-106/G, Z106/HY, Type Z-146 investigated for exterior use.
GRACE KOREA INC - Types MK-6/HY, MK-6/HY Extended Set, MK-6s, SK-3, Types Z-106, Z-106/G, Z-106/HY, Type Z-146 investigated for exterior use.

10C. **Alternate Spray-Applied Fire Resistive Materials*** - Applied by mixing with water and spraying in more than one coat to final thicknesses as shown in the illustration above and in the table below to steel surfaces which must be clean and free of dirt, loose scale and oil. When steel deck is used the area between the steel deck and the beams top flange shall be filled. For minimum and maximum density of: Types MK-6/HY, MK-6/HY Extended Set , MK-6s, SK-3, RG, SK-3 see Item 10; Types Z-106, Z-106/G, Z-106/HY, Z-106/G see Item 10A; Type Z-146 see Item 10B.

Restrained Assembly Rating Hr	Unrestrained Assembly Rating Hr	Unrestrained Beam Rating Hr	Joist thickness** 12K3 more than 4 ft OC	12K3 less than 4 ft OC
1	3/4	1	15/16	15/16
1	1	1	15/16	15/16
1 1/2	1 1/2	1 1/2	1 1/4	1 3/16
2	2	2	1 5/16	1 1/2
3	2	2	1 5/16	1 1/2
3	3	3	1 5/16	1 1/2

**Design load shall stress the 12K3 joist to a maximum tensile strength of 24,000 psi, which represents 80% of the maximum allowable design loading. Based on the Steel Joist Institute (SJI) Publication, "Catalog of Standard Specifications and Load Tables for Steel Joists and Joist Girders" for guidance on how to increase the design loading accordingly.
@ When the maximum clear span of the steel decking is 5 ft. 2 in. or less, the Unrestrained Assembly Rating is 1-hour.

ARAHAN VERMICULITE INDUSTRIES - Types MK-6/HY, MK-6/HY Extended Set , MK-6s, SK-3, Z-106, Z-106/G, Z-106/HY, Type Z-146 investigated for

PARTITION TYPES

CONSTRUCTION ASSEMBLIES / PARTITION TYPES
GENERAL NOTES

1.) THE CONTRACTOR SHALL VERIFY ALL ASSEMBLY INFORMATION WITH UNDERWRITERS LABORATORIES, GYPSUM ASSOCIATION, OR OTHER ORGANIZATIONS LISTED IN THE ASSEMBLIES TO ENSURE PROPER FIRE RATINGS ARE MAINTAINED.

2.) WHERE STC (SOUND TRANSMISSION CLASS) RATINGS ARE INDICATED, SOUND-RATED WALL CONSTRUCTION SHALL INCLUDE THE FOLLOWING:

a.) CONTINUOUS FLEXIBLE ACOUSTICAL SEALANT AT THE BOTTOM EDGE OF WALLBOARD PANELS.

b.) CONTINUOUS FLEXIBLE ACOUSTICAL SEALANT OR JOINT TAPE AND MUD AT WALL INTERSECTIONS. SEAL BETWEEN WALLBOARD AND DISSIMILAR MATERIALS, SUCH AS DOOR OR WINDOW FRAMES.

c.) CONTINUOUS ACOUSTICAL SEALANT OR FIRE-CAULT SEALANT (AS REQUIRED BY THE ASSEMBLY LISTING) AT THE TOP EDGE OF THE WALLBOARD WHERE THE JOINT IS CONCEALED, OR PROVIDE WALLBOARD TAPE AND MUD WHERE THE TOP JOINT IS EXPOSED TO VIEW.

d.) FLEXIBLE ACOUSTICAL SEALANT OR FIRE-CAULT (AS REQUIRED BY THE ASSEMBLY LISTING) AT ALL FULL OR PARTIAL WALL PENETRATIONS AND AROUND OPENINGS, FLUSH-MOUNTED ACCESSORIES, FIRE EXTINGUISHER CABINETS, ELECTRICAL BOXES, ETC. LINE ALL RECESSES FOR BUILT-IN DEVICES SUCH AS FIRE EXTINGUISHER CABINETS, TOILET ACCESSORIES, ETC. WITH WALLBOARD. SEAL ALL JOINTS.

e.) COVER ALL KNOCK-OUT PLUGS AND SCREW HOLES IN FLUSH-MOINTED ELECTRICAL BOXES WITH A MINIMUM 1/16 INCH THICK LAYER OF ACOUSTICAL SEALANT. APPLY TAPE OVER MISSING KNOCK-OUT PLUGS AND COVER WITH MINIMUM 1/8 INCH THICK LAYER OF ACOUSTICAL SEALANT.

f.) SOUND-RATED WALLS SHALL BE SEALED AIR-TIGHT AT THE PERIMETER AND AT ALL PARTIAL AND THROUGH-PENETRATIONS.

g.) EXTEND SOUND-RATED WALLS THROUGH SUSPENDED CEILINGS AND SEAL THE JOINT AT THE STRUCTURE ABOVE. SEAL ALL PENETRATIONS ABOVE THE SUSPENDED CEILINGS.

h.) GYPSUM WALLBOARD AND ACOUSTICAL INSULATION IN SOUND-RATED PARTITIONS SHOULD NOT BE INTERRUPTED AT THE INTERSECTIONS WITH NON-SOUND RATED PARTITIONS. FRAMING AND WALLBOARD OF NON-SOUND RATED CONSTRUCTION SHOULD ABUT THE CONTINUOUS WALLBOARD OF THE SOUND-RATED WALL.

i.) REFER TO THE GYPSUM ASSOCIATION FIRE RESISTANCE DESIGN MANUAL GA-600 - LATEST EDITION, SECTION III SOUND CONTROL FOR ADDITIONAL DETAILS. FOLLOW GYPSUM ASSOCIATION RECOMMENDATIONS FOR EFFECTIVE SOUND ISOLATION CONSTRUCTION.

3.) WHERE FIRE-RESISTANT ASSEMBLIES ARE INDICATED, REFER TO THE REFERENCED FIRE-TESTED ASSEMBLY AND PROVIDE THE MATERIALS, BRAND NAMES, PRODUCTS, AND CONSTRUCTION METHODS SPECIFIED THEREIN.

4.) AT ALL FIRE-RESISTIVE WALLS AND SMOKE BARRIER CONSTRUCTION WHERE A PORTION OF THE CONSTRUCTION IS CONCEALED ABOVE SUSPENDED CEILINGS, STENCIL A NOTE IN 2 INCH HIGH RED LETTERS (OR APPROVED EQUAL) "FIRE AND SMOKE BARRIER - PROTECT ALL OPENINGS." NO POINT ALONG THE LENGTH OF THE RATED WALL SHOULD BE MORE THAN 8 FEET FROM A STENCILED NOTE. CONFIRM THE NOTE LANGUAGE AND SPACING REQUIREMENTS WITH THE AUTHORITY HAVING JURISDICTION BEFORE APPLICATIONS.

5.) WHERE FLUSH-MOUNTED ELECTRICAL OUTLET BOXES (16 SQUARE INCHES OR LESS) ARE INDICATED LESS THAN 24 INCHES APART ON OPPOSITE SIDES OF FIRE-RESISTIVE CONSTRUCTION, PROVIDE AS NEEDED, FIRE-RETARDANT PUTTY PADS TO WRAP THE ELECTRICAL BOXES. PUTTY PADS WILL BE PROVIDED TO COMPLY WITH THE BUILDING CODE AND TO CONFORM WITH THE REQUIREMENTS OF THE FIRE-TESTED WALL ASSEMBLY. AND WILL BE UL CLASSIFIED "WALL OPENING PROTECTIVE MATERIAL".

6.) WHERE RECESSED DEVICES ARE INDICATED IN FIRE-RESISTIVE GYPSUM WALLBOARD CONSTRUCTION, PROVIDE LAYERS OF GYPSUM WALLBOARD BETWEEN THE STUDS, INSIDE THE RECESS - TOP, BOTTOM, BACK AND SIDES, AS REQUIRED TO MAINTAIN THE FIRE RESISTANCE RATING INDICATED. EXAMPLES OF RECESSED DEVICES INCLUDED ARE TOILET ACCESSORIES, FIRE EXTINGUISHER CABINETS, FIRE HOSE CABINETS, BATH FANS, RECESSED LIGHTS, ETC.. UNLESS A RATED FIXTURE IS BEING PROVIDED TO MAINTAIN THE RATING OF THE ASSEMBLY.

7.) EXTERIOR WALL CONSTRUCTION - ALL PARTIAL PENETRATIONS SHALL BE SEALED. PENETRATIONS THROUGH THE INTERIOR SIDE OF EXTERIOR WALLS SHALL BE SEALED AIR-TIGHT TO PREVENT AIR INFILTRATION. EXAMPLE - ELECTRICAL BOX FOR SWITCH OR OUTLET. PENETRATIONS THROUGH THE EXTERIOR SIDE OF EXTERIOR WALLS SHALL BE SEALED WATER-TIGHT. EXAMPLE - HOSE BIB, CONDUIT, OR PIPE.

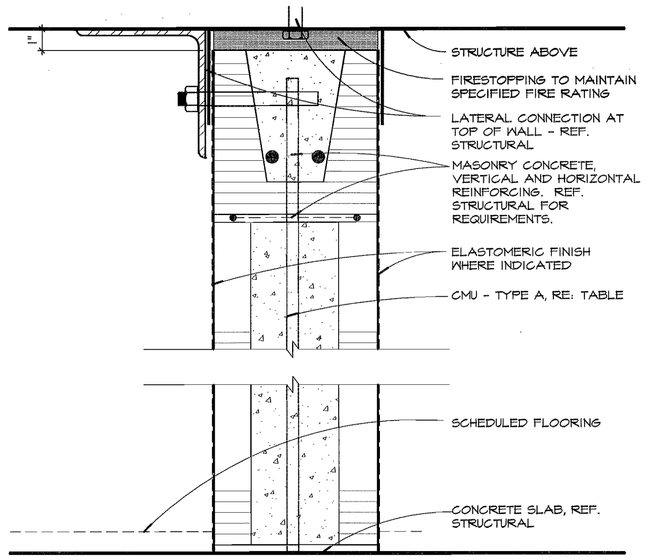

NUMBER	STUD SIZE	STUD GAUGE	STUD SPACING	GYPSUM BOARD	WALL THICKNESS	INSUL.	FIRE RATING	U.L. NUMBER	ASSY REF.
1	-	-	-	-	7 5/8"	-	-	-	-
2	-	-	-	-	7 5/8"	-	2 HOUR	U905	1/A003
3	-	-	-	-	11 5/8"	-	-	-	-
4	-	-	-	-	11 5/8"	-	2 HOUR	U905	1/A003
-	-	-	-	-	-	-	-	-	-
-	-	-	-	-	-	-	-	-	-
-	-	-	-	-	-	-	-	-	-
-	-	-	-	-	-	-	-	-	-
-	-	-	-	-	-	-	-	-	-

A PARTITION TYPE
3" = 1'-0" KT-A7007

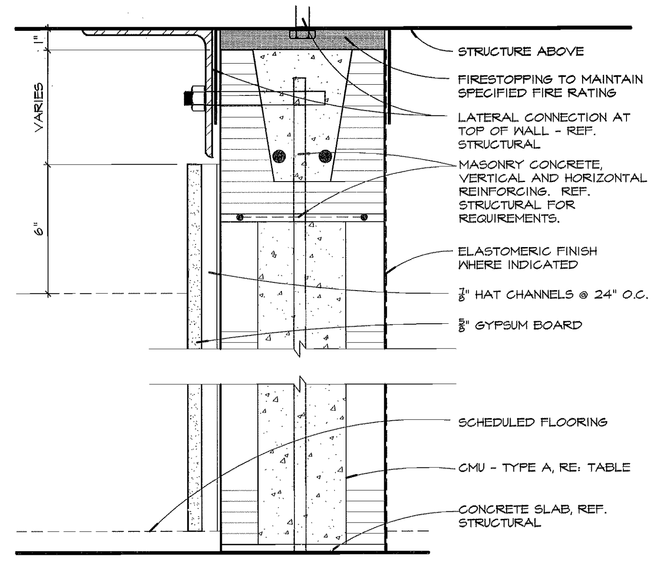

NUMBER	STUD SIZE	STUD GAUGE	STUD SPACING	GYPSUM BOARD	WALL THICKNESS	INSUL.	FIRE RATING	U.L. NUMBER	ASSY REF.
1	7/8"	-	24" O.C.	5/8"	7 5/8"	-	-	-	-
2	7/8"	-	24" O.C.	5/8"	7 5/8"	-	2 HOUR	U905	1/A003
3	7/8"	-	24" O.C.	5/8"	11 5/8"	-	-	-	-
4	7/8"	-	24" O.C.	5/8"	11 5/8"	-	2 HOUR	U905	1/A003
-	-	-	-	-	-	-	-	-	-
-	-	-	-	-	-	-	-	-	-
-	-	-	-	-	-	-	-	-	-
-	-	-	-	-	-	-	-	-	-
-	-	-	-	-	-	-	-	-	-

B PARTITION TYPE
3" = 1'-0" KT-B7007

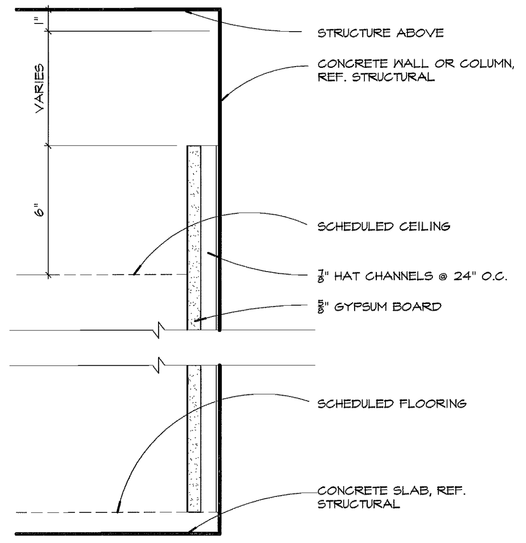

NUMBER	STUD SIZE	STUD GAUGE	STUD SPACING	GYPSUM BOARD	WALL THICKNESS	INSUL.	FIRE RATING	U.L. NUMBER	ASSY REF.
1	7/8"	-	24" O.C.	5/8"	1 1/2"	-	-	-	-
-	-	-	-	-	-	-	-	-	-
-	-	-	-	-	-	-	-	-	-
-	-	-	-	-	-	-	-	-	-
-	-	-	-	-	-	-	-	-	-
-	-	-	-	-	-	-	-	-	-
-	-	-	-	-	-	-	-	-	-
-	-	-	-	-	-	-	-	-	-

C PARTITION TYPE
3" = 1'-0" KT-C7007

FINK ROBERTS & PETRIE, INC.
Consulting Engineers
4040 Vincennes Circle, Suite 300
Indianapolis, Indiana 46268

Eddy Street Commons
Phase II
Parking Garage
Project Number 108-004

Owner
City of South Bend, Indiana

Construction Manager
Kite Realty Group
30 South Meridian Street, Suite 1100
Indianapolis, Indiana 46204
317-577-5600

Structural Engineer
Fink, Roberts & Petrie, Inc.
4040 Vincennes Circle, Suite 300
Indianapolis, Indiana 46268
317-872-8400

Architect
Looney Ricks Kiss
175 Toyota Plaza, Suite 600
Memphis, Tennessee 38103
901-521-1440

Mechanical, Electrical & Plumbing Engineer
Circle Design Group
5510 South East Street, Suite F
Indianapolis, Indiana 46227
317-781-6200

Parking Consultant
Walker Parking Consultants
6602 East 75th Street, Suite 210
Indianapolis, Indiana 46250
317-842-6890

Civil Engineer/Landscape Architect
The Troyer Group
550 Union Street
Mishawaka, Indiana 46554
574-259-0976

100% Construction Documents
January 23, 2008

REVISION DATE | REVISION DESCRIPTION

CERTIFIED BY
PAUL CAMERON LOOSE
REGISTERED
No. 10500056
STATE OF
INDIANA
1-23-08

DESIGN DATE	DESIGN PROJECT NO.	DESIGN DRAWN BY	CHECKED BY
01/23/08	07097	JH	CL

SHEET TITLE
CONSTRUCTION ASSEMBLIES NOTES
PARTITION TYPES

SHEET NO.
A004

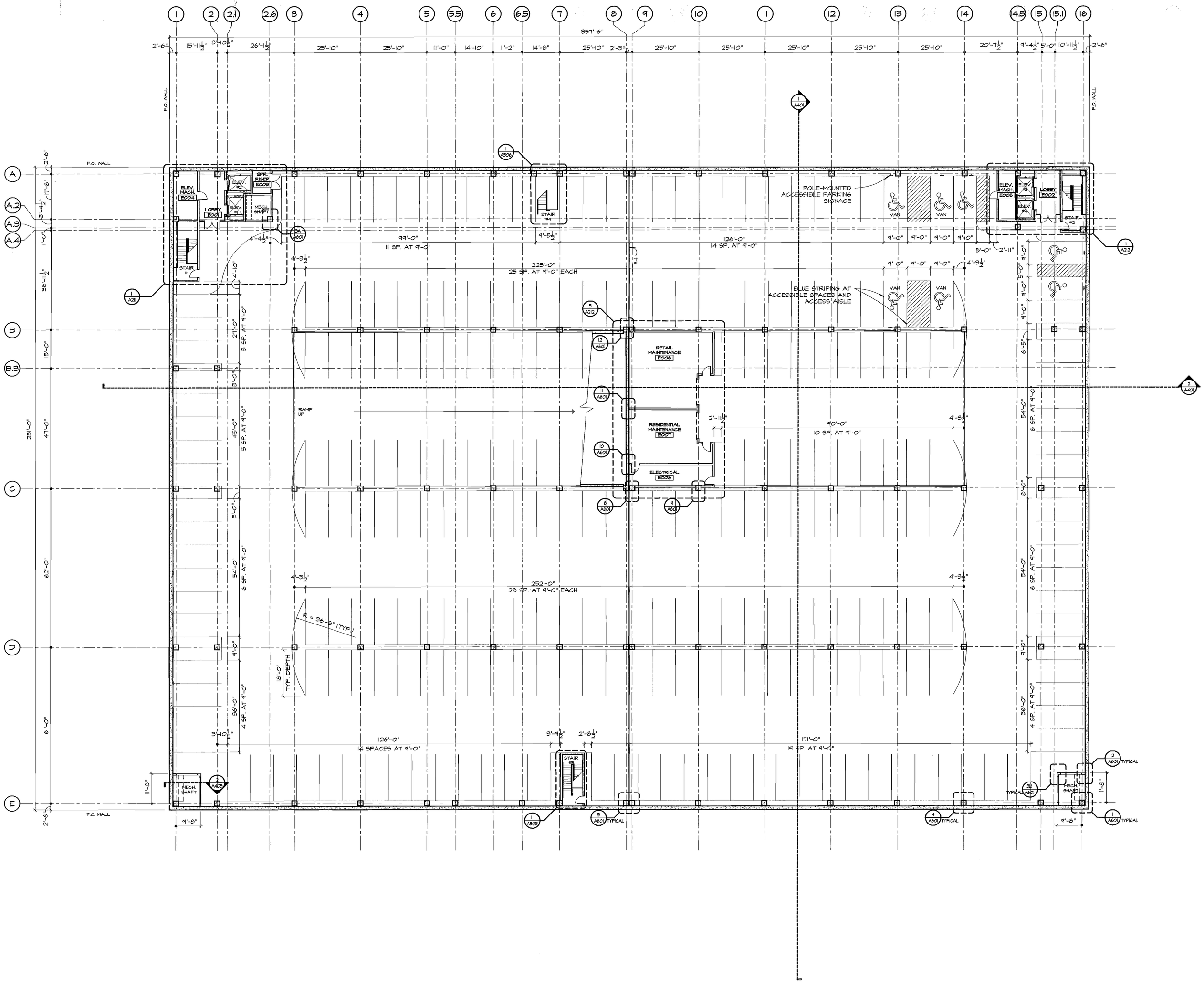

NORTH

FLOOR PLAN - BASEMENT LEVEL

SCALE : 1/16" = 1'-0"

E-B001007

FINK ROBERTS & PETRIE, INC.
Consulting Engineers
4040 Vincennes Circle - Suite 300
Indianapolis, Indiana 46268

Eddy Street Commons
Phase II
Parking Garage
Project Number 108-004

Owner
City of South Bend, Indiana

Construction Manager
Kite Realty Group
30 South Meridian Street, Suite 1100
Indianapolis, Indiana 46204
317-577-5600

Structural Engineer
Fink, Roberts & Petrie, Inc.
4040 Vincennes Circle, Suite 300
Indianapolis, Indiana 46268
317-872-8400

Architect
Looney Ricks Kiss
175 Toyota Plaza, Suite 600
Memphis, Tennessee 38103
901-521-1440

Mechanical, Electrical & Plumbing Engineer
Circle Design Group
5510 South East Street, Suite F
Indianapolis, Indiana 46227
317-781-6200

Parking Consultant
Walker Parking Consultants
6602 East 75th Street, Suite 210
Indianapolis, Indiana 46250
317-842-6890

Civil Engineer/Landscape Architect
The Troyer Group
550 Union Street
Mishawaka, Indiana 46554
574-259-9976

100% Construction Documents
January 23, 2008

REVISION DATE | REVISION DESCRIPTION

CERTIFIED BY: JAMES H. PETRIE REGISTERED No. 10500056 STATE OF INDIANA — 1-23-08

DESIGN DATE	DESIGN PROJECT NO.	DESIGN DRAWN BY	CHECKED BY
01/23/08	108-004	JPH	JPH

SHEET TITLE: BASEMENT LEVEL FLOOR PLAN

SHEET NO.: A101

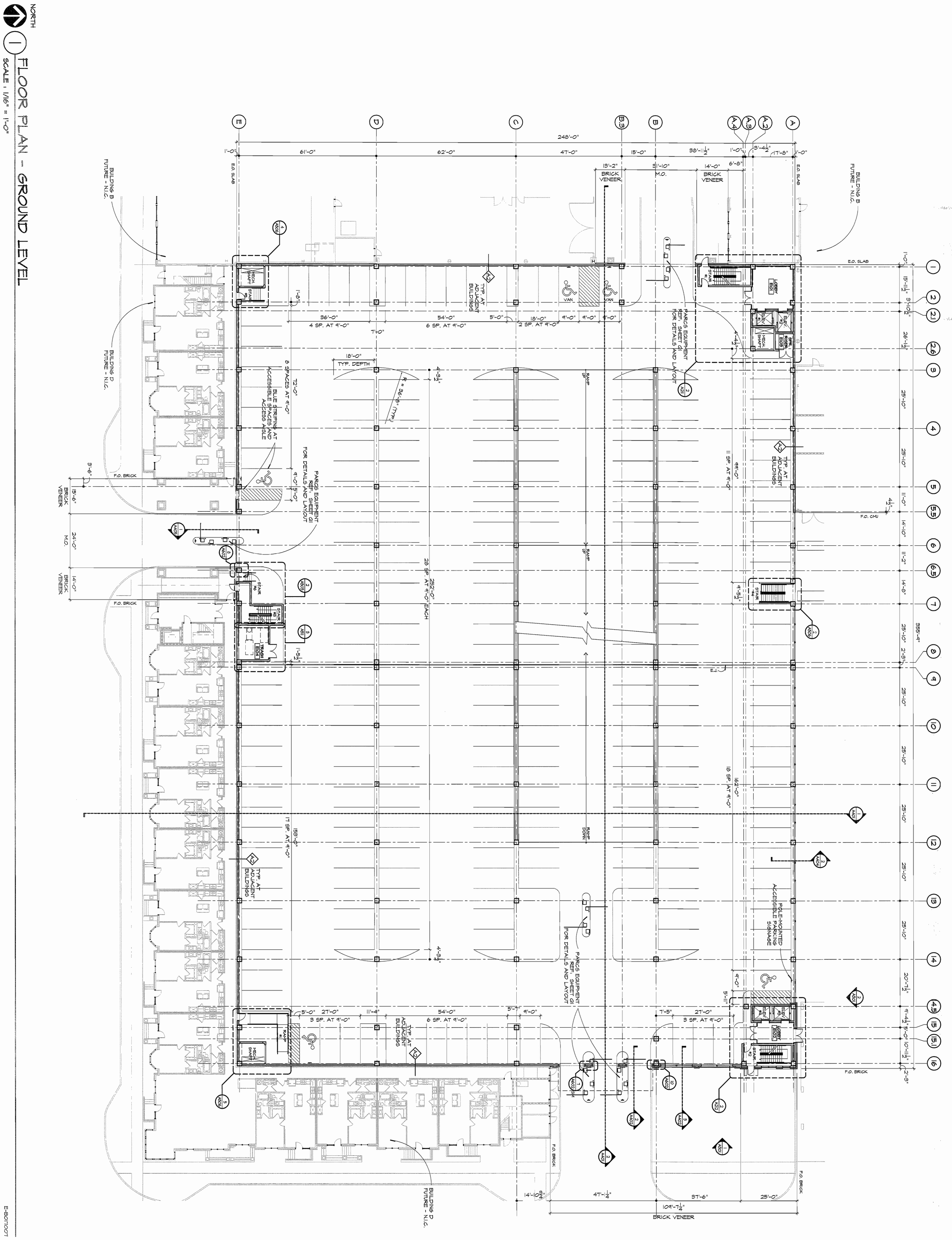

E-B01T001

SHEET NO.	SHEET TITLE	DESIGN DATE	CERTIFIED BY	REVISION DATE	REVISION DESCRIPTION
A102	GROUND LEVEL FLOOR PLAN	01/23/08 DESIGN PROJECT NO. 07097 DESIGN DRAWN BY JPH CHECKED BY JPH	PAUL CAMERON CLOSE REGISTERED No. 10500056 STATE OF INDIANA 1-29-08		

100% Construction Documents
January 23, 2008

Civil Engineer/Landscape Architect
The Troyer Group
550 Union Street
Mishawaka, Indiana 46554
574-259-9976

Parking Consultant
Walker Parking Consultants
6602 East 75th Street, Suite 210
Indianapolis, Indiana 46250
317-842-6890

Mechanical, Electrical & Plumbing Engineer
Circle Design Group
5510 South East Street, Suite F
Indianapolis, Indiana 46227
317-781-6200

Architect
Looney Ricks Kiss
175 Toyota Plaza, Suite 600
Memphis, Tennessee 38103
901-521-1440

Structural Engineer
Fink, Roberts & Petrie, Inc.
4040 Vincennes Circle, Suite 300
Indianapolis, Indiana 46268
317-872-8400

Construction Manager
Kite Realty Group
30 South Meridian Street, Suite 1100
Indianapolis, Indiana 46204
317-577-5600

Owner
City of South Bend, Indiana

Eddy Street Commons
Phase II
Parking Garage
Project Number 108-004

FINK ROBERTS & PETRIE, INC.
Consulting Engineers
4040 Vincennes Circle Suite 300
Indianapolis, Indiana 46268

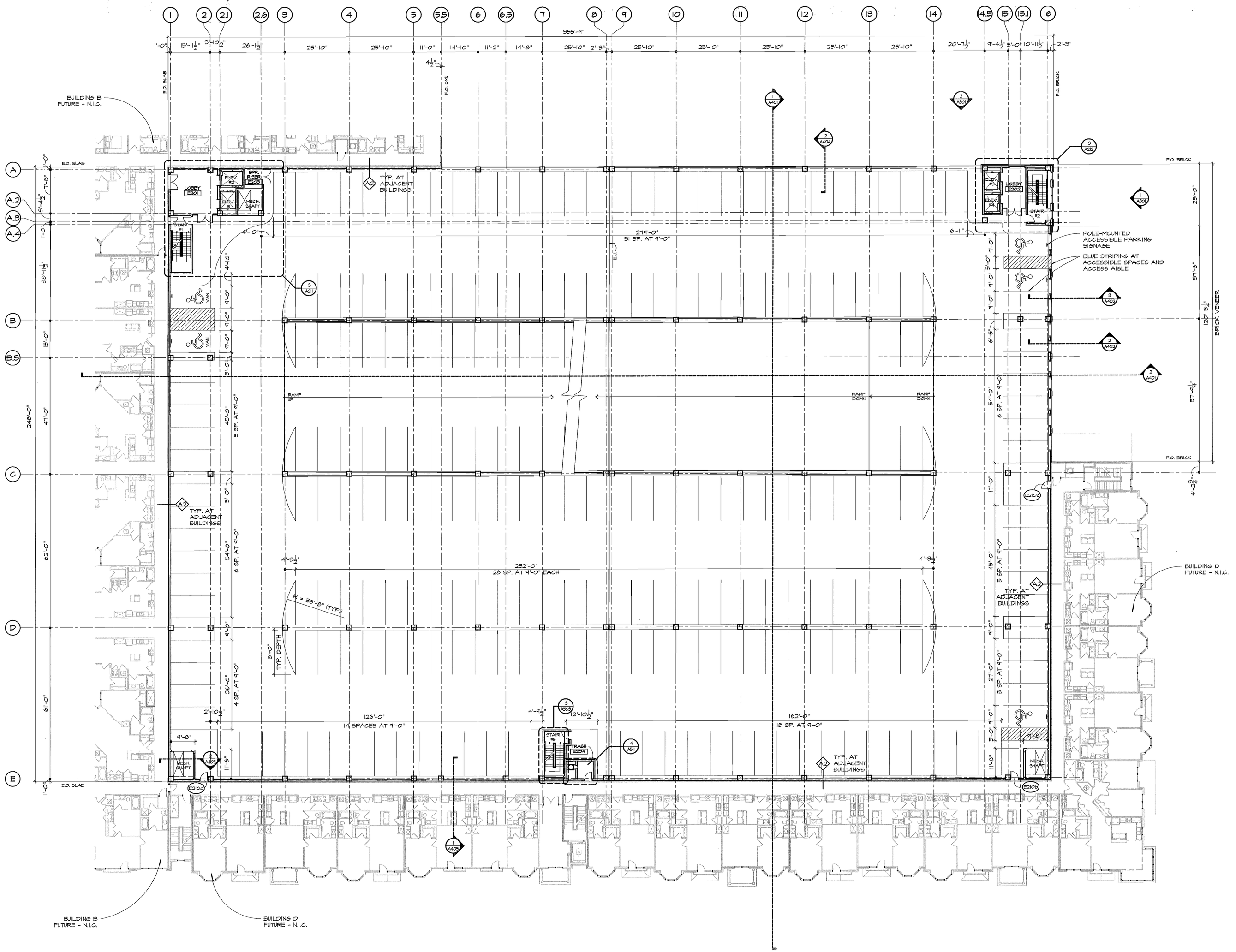

NORTH

FLOOR PLAN - SECOND LEVEL

SCALE : 1/16" = 1'-0"

E-B021001

FINK ROBERTS & PETRIE, INC.
Consulting Engineers
Indianapolis, Indiana 46268

Eddy Street Commons
Phase II
Parking Garage
Project Number 108-004

Owner
City of South Bend, Indiana

Construction Manager
Kite Realty Group
30 South Meridian Street, Suite 1100
Indianapolis, Indiana 46204
317-577-5600

Structural Engineer
Fink, Roberts & Petrie, Inc.
4040 Vincennes Circle, Suite 300
Indianapolis, Indiana 46268
317-872-8400

Architect
Looney Ricks Kiss
175 Toyota Plaza, Suite 600
Memphis, Tennessee 38103
901-521-1440

Mechanical, Electrical & Plumbing Engineer
Circle Design Group
5510 South East Street, Suite F
Indianapolis, Indiana 46227
317-781-6200

Parking Consultant
Walker Parking Consultants
6602 East 75th Street, Suite 210
Indianapolis, Indiana 46250
317-842-6890

Civil Engineer/Landscape Architect
The Troyer Group
550 Union Street
Mishawaka, Indiana 46554
574-259-9976

100% Construction Documents
January 23, 2008

REVISION DESCRIPTION

REVISION DATE

CERTIFIED BY

ROBERT CAMERON ROSE
REGISTERED
No. 10500056
STATE OF
INDIANA
1-23-08

DESIGN DATE	DESIGN PROJECT NO.	DESIGN DRAWN BY	CHECKED BY
01/23/08	07097	JPH	JPH

SHEET TITLE
SECOND LEVEL FLOOR PLAN

SHEET NO.
A103

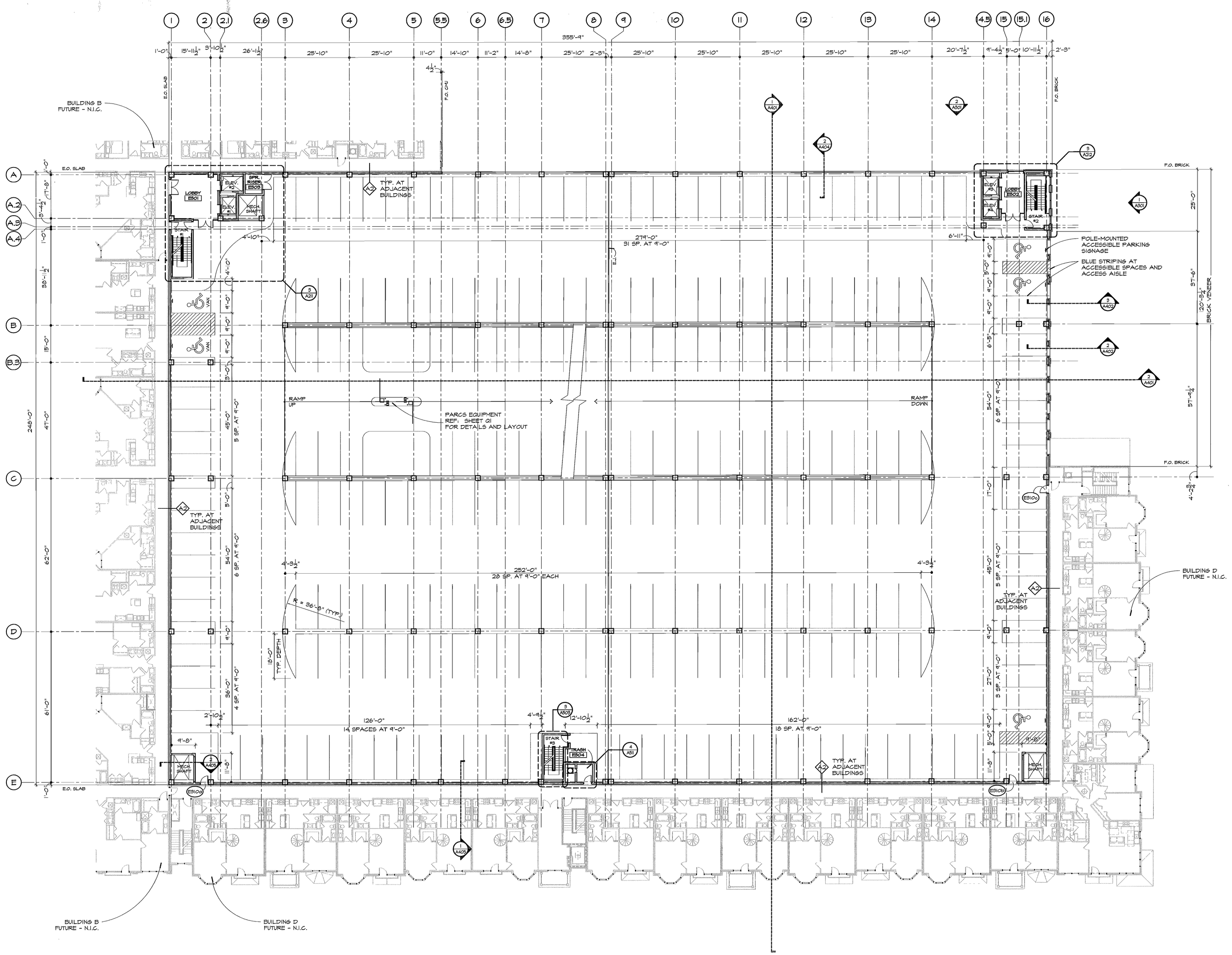

NORTH

1 FLOOR PLAN - THIRD LEVEL

SCALE : 1/16" = 1'-0"

E-B07007

FINK ROBERTS & PETRIE, INC.
Consulting Engineers
4040 Vincennes Circle, Suite 300
Indianapolis, Indiana 46268

Eddy Street Commons Phase II Parking Garage

Project Number 108-004

Owner
City of South Bend, Indiana

Construction Manager
Kite Realty Group
30 South Meridian Street, Suite 1100
Indianapolis, Indiana 46204
317-577-5600

Structural Engineer
Fink, Roberts & Petrie, Inc.
4040 Vincennes Circle, Suite 300
Indianapolis, Indiana 46268
317-872-8400

Architect
Looney Ricks Kiss
175 Toyota Plaza, Suite 600
Memphis, Tennessee 38103
901-521-1440

Mechanical, Electrical & Plumbing Engineer
Circle Design Group
5510 South East Street, Suite F
Indianapolis, Indiana 46227
317-781-6200

Parking Consultant
Walker Parking Consultants
6602 East 75th Street, Suite 210
Indianapolis, Indiana 46250
317-842-6890

Civil Engineer/Landscape Architect
The Troyer Group
550 Union Street
Mishawaka, Indiana 46554
574-259-9976

100% Construction Documents
January 23, 2008

REVISION DATE | REVISION DESCRIPTION

CERTIFIED BY
JAMES CAMERON CROUSE
REGISTERED
No. 10500056
STATE OF
INDIANA
ARCHITECT
1-23-08

DESIGN DATE: 01/23/08
DESIGN PROJECT #: 07097
DESIGN DRAWN BY: JPH
CHECKED BY: JPH

SHEET TITLE: THIRD LEVEL FLOOR PLAN

SHEET NO.: A104

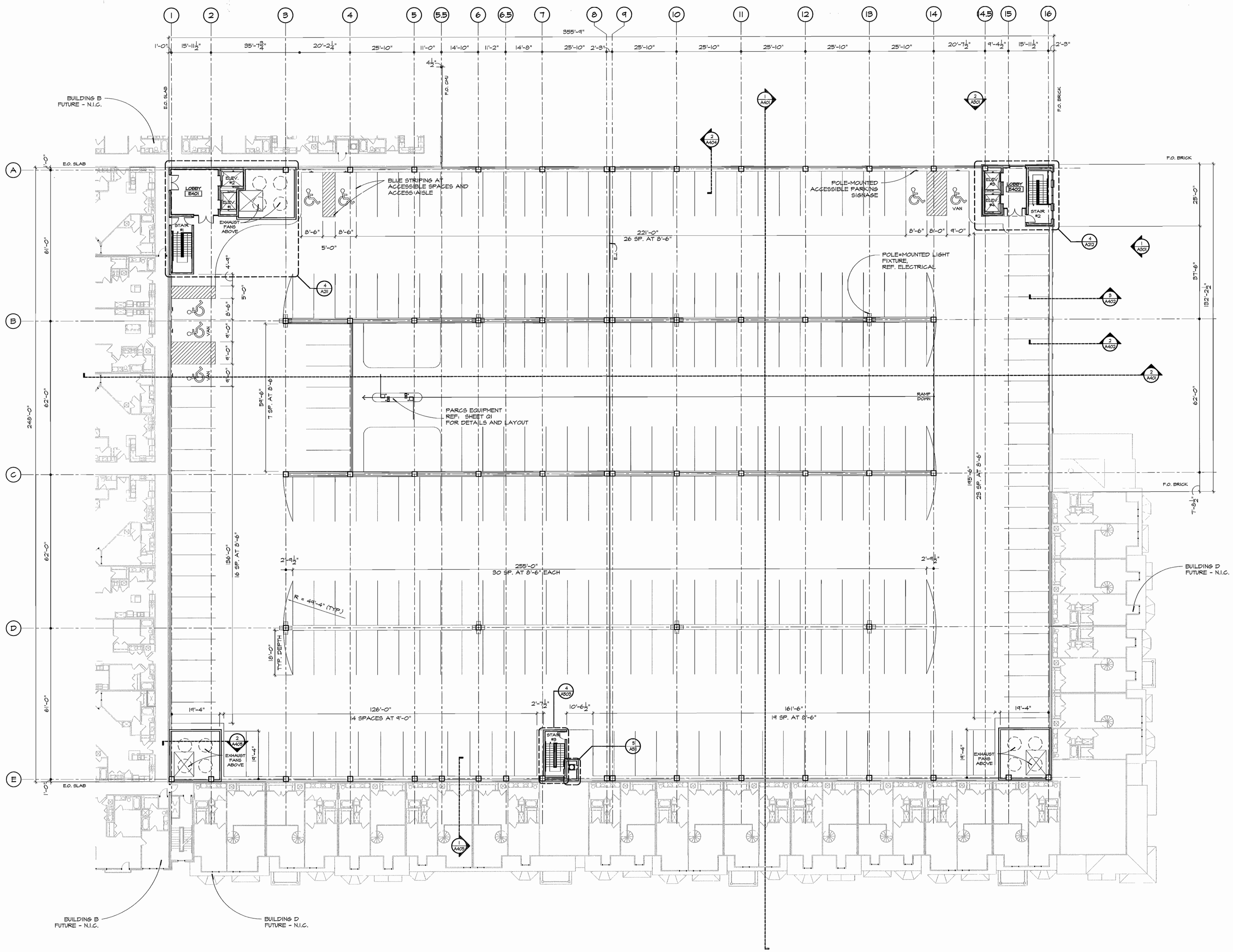

NORTH

1 FLOOR PLAN - FOURTH LEVEL

SCALE : 1/16" = 1'-0"

E-B041007

FINK ROBERTS & PETRIE, INC.
Consulting Engineers
4040 Vincennes Circle, Suite 300
Indianapolis, Indiana 46268

Eddy Street Commons Phase II Parking Garage

Project Number 108-004

Owner
City of South Bend, Indiana

Construction Manager
Kite Realty Group
30 South Meridian Street, Suite 1100
Indianapolis, Indiana 46204
317-577-5600

Structural Engineer
Fink, Roberts & Petrie, Inc.
4040 Vincennes Circle, Suite 300
Indianapolis, Indiana 46268
317-872-8400

Architect
Looney Ricks Kiss
175 Toyota Plaza, Suite 600
Memphis, Tennessee 38103
901-521-1440

Mechanical, Electrical & Plumbing Engineer
Circle Design Group
5510 South East Street, Suite F
Indianapolis, Indiana 46227
317-781-6200

Parking Consultant
Walker Parking Consultants
6602 East 75th Street, Suite 210
Indianapolis, Indiana 46250
317-842-6890

Civil Engineer/Landscape Architect
The Troyer Group
550 Union Street
Mishawaka, Indiana 46554
574-259-9976

100% Construction Documents
January 23, 2008

REVISION DESCRIPTION

REVISION DATE

CERTIFIED BY
JOSE CAMERO JOSE
REGISTERED
No. 10500058
STATE OF
INDIANA
1-23-08

DESIGN DATE	DESIGN PROJECT NO.	DESIGN DRAWN BY	CHECKED BY
01/23/08	0709	JPH	PJH

SHEET TITLE
FOURTH LEVEL FLOOR PLAN

SHEET NO.
A105

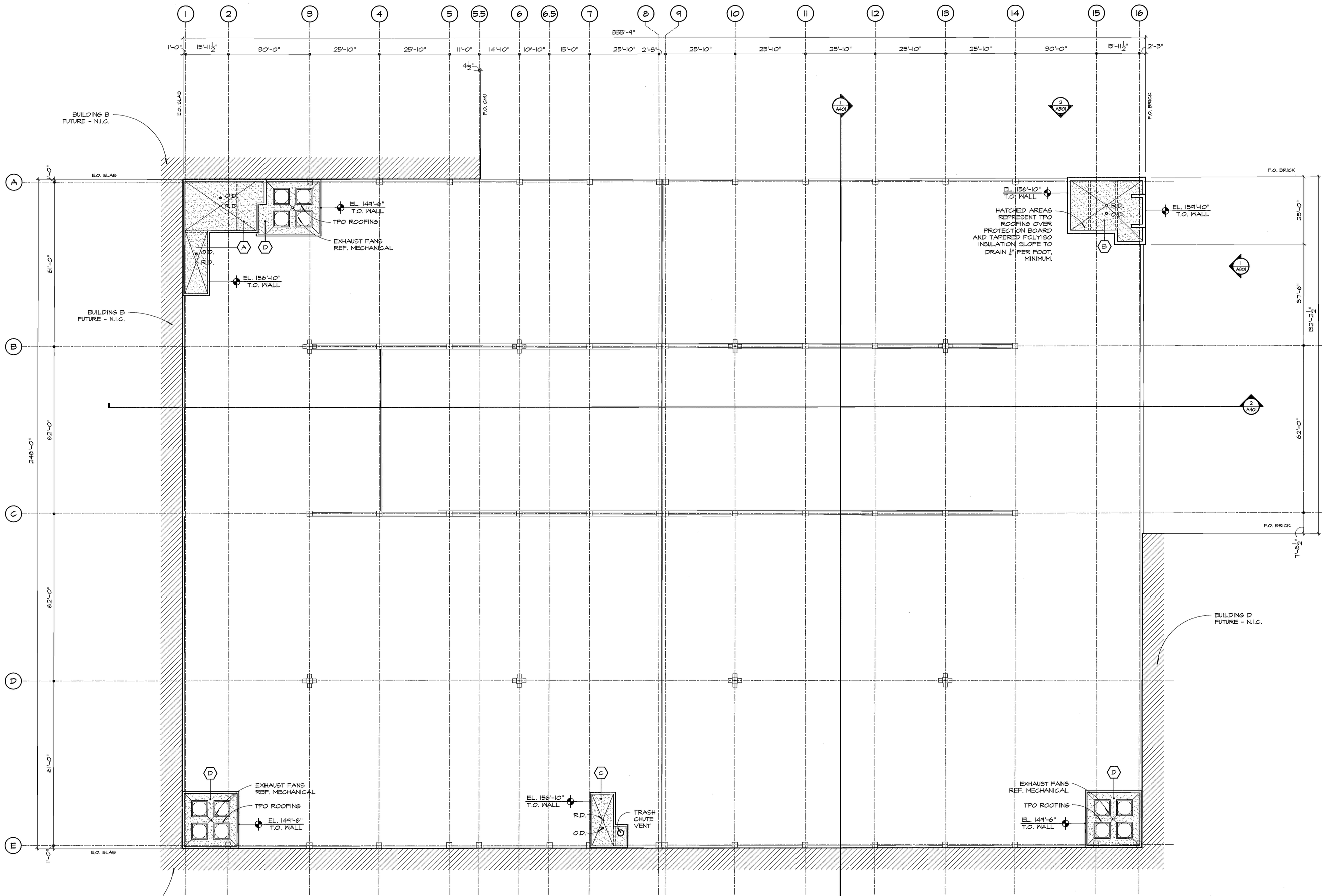

ROOF ELEVATION SCHEDULE

TAG	ELEVATION AT DRAIN (1/2" COVER BOARD OVER 2" INSULATION)	ELEVATION AT WALL (1/4" PER FOOT MINIMUM INSULATION SLOPE)
A	155'-10"	156'-2"
B	155'-10"	156'-1 1/2"
C	155'-10"	156'-0 1/2"
D	145'-4 1/2"	145'-7"

NORTH

1 ROOF PLAN

SCALE : 1/16" = 1'-0"

E-B05T007

FINK ROBERTS & PETRIE, INC.
Consulting Engineers
4040 Vincennes Circle, Suite 300
Indianapolis, Indiana 46268

Eddy Street Commons Phase II Parking Garage

Project Number 108-004

Owner
City of South Bend, Indiana

Construction Manager
Kite Realty Group
30 South Meridian Street, Suite 1100
Indianapolis, Indiana 46204
317-577-5600

Structural Engineer
Fink, Roberts & Petrie, Inc.
4040 Vincennes Circle, Suite 300
Indianapolis, Indiana 46268
317-872-8400

Architect
Looney Ricks Kiss
175 Toyota Plaza, Suite 600
Memphis, Tennessee 38103
901-521-1440

Mechanical, Electrical & Plumbing Engineer
Circle Design Group
5510 South East Street, Suite F
Indianapolis, Indiana 46227
317-781-6200

Parking Consultant
Walker Parking Consultants
6602 East 75th Street, Suite 210
Indianapolis, Indiana 46250
317-842-6890

Civil Engineer/Landscape Architect
The Troyer Group
550 Union Street
Mishawaka, Indiana 46554
574-259-9976

100% Construction Documents
January 23, 2008

REVISION DATE | REVISION DESCRIPTION

CERTIFIED BY
ROGER CAMERON ROSS
REGISTERED
No. 10500056
STATE OF INDIANA
1-22-08

DESIGN DATE	DESIGN PROJECT NO.	DESIGN DRAWN BY	CHECKED BY
01/23/08	0709T	JH	JHT

SHEET TITLE: ROOF PLAN

SHEET NO.: A106

FINISH SCHEDULE

ROOM				WALLS NORTH		SOUTH		EAST		WEST		CEILING		REMARKS:
NO.	NAME	FLOOR	BASE	MATERIAL	FINISH	MATERIAL	FINISH	MATERIAL	FINISH	MATERIAL	FINISH	MATERIAL	HEIGHT	
BASEMENT LEVEL														
E001	LOBBY	CONC.	WD	G.B.	PTD	G.B.	PTD	G.B.	PTD	G.B.	PTD	GB	8'-0"	
E002	LOBBY	CONC.	WD	G.B.	PTD	G.B.	PTD	G.B.	PTD	G.B.	PTD	GB	8'-0"	
E003	SPRINKLER RISER RM.	CONC.	-	CMU	PTD	CMU	PTD	CMU	PTD	CMU	PTD	EXPOSED	-	
E004	ELEVATOR MACHINE RM.	CONC.	-	CMU	PTD	CMU	PTD	CMU	PTD	CMU	PTD	EXPOSED	-	
E005	ELEVATOR MACHINE RM.	CONC.	-	CMU	PTD	CMU	PTD	CMU	PTD	CMU	PTD	EXPOSED	-	
E006	RETAIL MAINTENANCE	CONC.	-	CMU	PTD	CMU	PTD	CMU	PTD	CMU	PTD	EXPOSED	-	
E007	RESIDENTIAL MAINT.	CONC.	-	CMU	PTD	CMU	PTD	CMU	PTD	CMU	PTD	EXPOSED	-	
E008	ELECTRICAL	CONC.	-	CMU	PTD	CMU	PTD	CMU	PTD	CMU	PTD	EXPOSED	-	
E010	GARAGE	CONC.	-	CMU	E.C.	CMU	E.C.	CMU	E.C.	CMU	E.C.	EXPOSED	-	ELASTOMERIC CTG.
S001	STAIR #1	CONC.	-	CMU	PTD	CMU	PTD	CMU	PTD	CMU	PTD	EXPOSED	-	
S002	STAIR #2	CONC.	-	CMU	PTD	CMU	PTD	CMU	PTD	CMU	PTD	EXPOSED	-	
S003	STAIR #3	CONC.	-	CMU	PTD	CMU	PTD	CMU	PTD	CMU	PTD	EXPOSED	-	
FIRST LEVEL														
E101	LOBBY	CONC.	WD	G.B.	PTD	G.B.	PTD	G.B.	PTD	G.B.	PTD	GB	10'-0"	
E102	LOBBY	CONC.	WD	G.B.	PTD	G.B.	PTD	G.B.	PTD	G.B.	PTD	GB	10'-0"	
E103	SPRINKLER RISER RM.	CONC.	-	CMU	PTD	CMU	PTD	CMU	PTD	CMU	PTD	EXPOSED	-	
E104	TRASH ROOM	CONC.	-	CMU	PTD	CMU	PTD	CMU	PTD	CMU	PTD	EXPOSED	-	
E110	GARAGE	CONC.	-	CMU	E.C.	CMU	E.C.	CMU	E.C.	CMU	E.C.	EXPOSED	-	ELASTOMERIC CTG.
S101	STAIR #1	CONC.	-	CMU	PTD	CMU	PTD	CMU	PTD	CMU	PTD	EXPOSED	-	
S102	STAIR #2	CONC.	-	CMU	PTD	CMU	PTD	CMU	PTD	CMU	PTD	EXPOSED	-	
S103	STAIR #3	CONC.	-	CMU	PTD	CMU	PTD	CMU	PTD	CMU	PTD	EXPOSED	-	
SECOND LEVEL														
E201	LOBBY	CONC.	WD	G.B.	PTD	G.B.	PTD	G.B.	PTD	G.B.	PTD	GB	8'-0"	
E202	LOBBY	CONC.	WD	G.B.	PTD	G.B.	PTD	G.B.	PTD	G.B.	PTD	GB	8'-0"	
E203	SPRINKLER RISER RM.	CONC.	-	CMU	PTD	CMU	PTD	CMU	PTD	CMU	PTD	EXPOSED	-	
E204	TRASH ROOM	CONC.	-	CMU	PTD	CMU	PTD	CMU	PTD	CMU	PTD	EXPOSED	-	
E210	GARAGE	CONC.	-	CMU	E.C.	CMU	E.C.	CMU	E.C.	CMU	E.C.	EXPOSED	-	ELASTOMERIC CTG.
S201	STAIR #1	CONC.	-	CMU	PTD	CMU	PTD	CMU	PTD	CMU	PTD	EXPOSED	-	
S202	STAIR #2	CONC.	-	CMU	PTD	CMU	PTD	CMU	PTD	CMU	PTD	EXPOSED	-	
S203	STAIR #3	CONC.	-	CMU	PTD	CMU	PTD	CMU	PTD	CMU	PTD	EXPOSED	-	
THIRD LEVEL														
E301	LOBBY	CONC.	WD	G.B.	PTD	G.B.	PTD	G.B.	PTD	G.B.	PTD	GB	8'-0"	
E302	LOBBY	CONC.	WD	G.B.	PTD	G.B.	PTD	G.B.	PTD	G.B.	PTD	GB	8'-0"	
E303	SPRINKLER RISER RM.	CONC.	-	CMU	PTD	CMU	PTD	CMU	PTD	CMU	PTD	EXPOSED	-	
E304	TRASH ROOM	CONC.	-	CMU	PTD	CMU	PTD	CMU	PTD	CMU	PTD	EXPOSED	-	
E310	GARAGE	CONC.	-	CMU	E.C.	CMU	E.C.	CMU	E.C.	CMU	E.C.	EXPOSED	-	ELASTOMERIC CTG.
S301	STAIR #1	CONC.	-	CMU	PTD	CMU	PTD	CMU	PTD	CMU	PTD	EXPOSED	-	
S302	STAIR #2	CONC.	-	CMU	PTD	CMU	PTD	CMU	PTD	CMU	PTD	EXPOSED	-	
S303	STAIR #3	CONC.	-	CMU	PTD	CMU	PTD	CMU	PTD	CMU	PTD	EXPOSED	-	
FOURTH LEVEL														
E401	LOBBY	CONC.	WD	G.B.	PTD	G.B.	PTD	G.B.	PTD	G.B.	PTD	GB	10'-0"	
E402	LOBBY	CONC.	WD	G.B.	PTD	G.B.	PTD	G.B.	PTD	G.B.	PTD	GB	10'-0"	
E410	GARAGE	CONC.	-	CMU	E.C.	CMU	E.C.	CMU	E.C.	CMU	E.C.	EXPOSED	-	ELASTOMERIC CTG.
S401	STAIR #1	CONC.	-	CMU	PTD	CMU	PTD	CMU	PTD	CMU	PTD	EXPOSED	-	
S402	STAIR #2	CONC.	-	CMU	PTD	CMU	PTD	CMU	PTD	CMU	PTD	EXPOSED	-	
S403	STAIR #3	CONC.	-	CMU	PTD	CMU	PTD	CMU	PTD	CMU	PTD	EXPOSED	-	

DOOR SCHEDULE

				Door					Frame	Detail (REF. SHEET A202)			Hardware	
MARK	WIDTH	HEIGHT	THICKNESS	MATL	FINISH	TYPE	RATING		MATL	HEAD	JAMB	THRESHOLD	SET#	REMARKS
BASEMENT														
E001	(PR) 3'-0"	8'-0"	1 3/4"	ALUM	PREFIN	F	-		ALUM	1	2, 3	4, 5	-	LOBBY ENTRY - STOREFRONT
E002	(PR) 3'-0"	8'-0"	1 3/4"	ALUM	PREFIN	F	-		ALUM	1	2, 3	4, 5	-	LOBBY ENTRY - STOREFRONT
E003	(PR) 3'-0"	7'-0"	1 3/4"	HM	PTD	B	-		HM	7	8	9	1	SPRINKLER RISER ROOM
E004	3'-4"	7'-0"	1 3/4"	HM	PTD	A	90M		HM	7	8	9	3	ELEVATOR MACHINE ROOM
E005	3'-4"	7'-0"	1 3/4"	HM	PTD	A	90M		HM	7	8	9	3	ELEVATOR MACHINE ROOM
E006a	3'-0"	7'-0"	1 3/4"	HM	PTD	A	-		HM	7	8	9	2	MAINTENANCE AREA
E006b	10'-0"	7'-0"	1 3/4"	STL	PREFIN	-	-		-	16	17	-	-	MAINTENANCE AREA - OVERHEAD DOOR
E007a	3'-0"	7'-0"	1 3/4"	HM	PTD	A	-		HM	7	8	9	2	MAINTENANCE AREA
E006b	10'-0"	7'-0"	1 3/4"	STL	PREFIN	-	-		-	16	17	-	-	MAINTENANCE AREA - OVERHEAD DOOR
E008a	3'-0"	7'-0"	1 3/4"	HM	PTD	A	-		HM	7	8	9	3	ELECTRICAL ROOM
E008b	3'-0"	7'-0"	1 3/4"	HM	PTD	A	-		HM	7	8	9	3	ELECTRICAL ROOM
S001	3'-0"	7'-0"	1 3/4"	HM	PTD	C	90M		HM	7	8	9	4	STAIR #1
S002	3'-0"	7'-0"	1 3/4"	HM	PTD	C	90M		HM	7	8	9	4	STAIR #2
S003	3'-0"	7'-0"	1 3/4"	HM	PTD	C	90M		HM	7	8	9	4	STAIR #3
FIRST LEVEL														
E101	(PR) 3'-0"	8'-0"	1 3/4"	ALUM	PREFIN	F	-		ALUM	1	2, 3	4, 5	-	LOBBY ENTRY - STOREFRONT
E102a	(PR) 3'-0"	8'-0"	1 3/4"	ALUM	PREFIN	F	-		ALUM	1	2, 3	4, 5	-	LOBBY ENTRY - STOREFRONT
E102b	(PR) 3'-0"	8'-0"	1 3/4"	ALUM	PREFIN	F	-		ALUM	14	15	4	-	LOBBY ENTRY - STOREFRONT
E103	(PR) 3'-0"	7'-0"	1 3/4"	HM	PTD	B	-		HM	7	8	9	1	SPRINKLER RISER ROOM
E104	(PR) 3'-0"	7'-0"	1 3/4"	HM	PTD	B	90M		HM	7	8	9	7	TRASH ROOM
E110a	3'-0"	7'-0"	1 3/4"	HM	PTD	C	90M		HM	7	8	9	8	ACCESS CONTROL - CONDO ACCESS
E110b	3'-0"	7'-0"	1 3/4"	HM	PTD	C	90M		HM	7	8	9	8	ACCESS CONTROL - CONDO ACCESS
S101a	3'-0"	7'-0"	1 3/4"	HM	PTD	C	90M		HM	7	8	9	4	STAIR #1
S101b	3'-0"	7'-0"	1 3/4"	HM	PTD	A	90M		HM	12	13	9	5	STAIR #1
S102a	3'-0"	7'-0"	1 3/4"	HM	PTD	C	90M		HM	7	8	9	4	STAIR #2
S102b	3'-0"	8'-0"	1 3/4"	ALUM	PREFIN	E	-		ALUM	14	15	4	-	STAIR #2 - STOREFRONT
S103	3'-0"	7'-0"	1 3/4"	HM	PTD	C	90M		HM	12	13	9	6	STAIR #3
SECOND LEVEL														
E201a	(PR) 3'-0"	8'-0"	1 3/4"	ALUM	PREFIN	F	-		ALUM	1	2, 3	4, 5	-	LOBBY ENTRY - STOREFRONT
E201b	(PR) 3'-0"	7'-0"	1 3/4"	HM	PTD	D	90M		HM	14	15	9	10	ACCESS CONTROL - APARTMENT ACCESS
E202	(PR) 3'-0"	8'-0"	1 3/4"	ALUM	PREFIN	F	-		ALUM	1	2, 3	4, 5	-	LOBBY ENTRY - STOREFRONT
E203	(PR) 3'-0"	7'-0"	1 3/4"	HM	PTD	B	-		HM	7	8	9	1	SPRINKLER RISER ROOM
E204	3'-0"	7'-0"	1 3/4"	HM	PTD	B	90M		HM	7	8	9	9	TRASH ROOM
E210a	3'-0"	7'-0"	1 3/4"	HM	PTD	C	90M		HM	7	8	9	8	ACCESS CONTROL - CONDO ACCESS
E210b	3'-0"	7'-0"	1 3/4"	HM	PTD	C	90M		HM	7	8	9	8	ACCESS CONTROL - CONDO ACCESS
E210c	3'-0"	7'-0"	1 3/4"	HM	PTD	C	90M		HM	7	8	9	8	ACCESS CONTROL - CONDO ACCESS
S201a	3'-0"	7'-0"	1 3/4"	HM	PTD	C	90M		HM	7	8	9	4	STAIR #1
S201b	3'-0"	7'-0"	1 3/4"	HM	PTD	C	90M		HM	7	8	9	6	STAIR #1; ACCESS CONTROL - CONDO ACCESS
S202	3'-0"	7'-0"	1 3/4"	HM	PTD	C	90M		HM	7	8	9	4	STAIR #2
S203	3'-0"	7'-0"	1 3/4"	HM	PTD	C	90M		HM	7	8	9	4	STAIR #3
THIRD LEVEL														
E301a	(PR) 3'-0"	8'-0"	1 3/4"	ALUM	PREFIN	F	-		ALUM	1	2, 3	4, 5	-	LOBBY ENTRY - STOREFRONT
E301b	(PR) 3'-0"	7'-0"	1 3/4"	HM	PTD	D	90M		HM				10	ACCESS CONTROL - APARTMENT ACCESS
E302	(PR) 3'-0"	8'-0"	1 3/4"	ALUM	PREFIN	F	-		ALUM	1	2, 3	4, 5	-	LOBBY ENTRY - STOREFRONT
E303	(PR) 3'-0"	7'-0"	1 3/4"	HM	PTD	B	-		HM	7	8	9	1	SPRINKLER RISER ROOM
E304	3'-0"	7'-0"	1 3/4"	HM	PTD	B	90M		HM	7	8	9	9	TRASH ROOM
E310a	3'-0"	7'-0"	1 3/4"	HM	PTD	C	90M		HM	7	8	9	8	ACCESS CONTROL - CONDO ACCESS
E310b	3'-0"	7'-0"	1 3/4"	HM	PTD	C	90M		HM	7	8	9	8	ACCESS CONTROL - CONDO ACCESS
E310c	3'-0"	7'-0"	1 3/4"	HM	PTD	C	90M		HM	7	8	9	8	ACCESS CONTROL - CONDO ACCESS
S301a	3'-0"	7'-0"	1 3/4"	HM	PTD	C	90M		HM	7	8	9	4	STAIR #1
S301b	3'-0"	7'-0"	1 3/4"	HM	PTD	C	90M		HM	7	8	9	6	STAIR #1; ACCESS CONTROL - CONDO ACCESS
S302	3'-0"	7'-0"	1 3/4"	HM	PTD	C	90M		HM	7	8	9	4	STAIR #2
S303	3'-0"	7'-0"	1 3/4"	HM	PTD	C	90M		HM	7	8	9	4	STAIR #3
FOURTH LEVEL														
E401a	(PR) 3'-0"	8'-0"	1 3/4"	ALUM	PREFIN	F	-		ALUM	1	2, 3	4, 5	-	LOBBY ENTRY - STOREFRONT
E401b	(PR) 3'-0"	7'-0"	1 3/4"	HM	PTD	D	90M		HM				10	ACCESS CONTROL - APARTMENT ACCESS
E402	(PR) 3'-0"	8'-0"	1 3/4"	ALUM	PREFIN	F	-		ALUM	1a	2, 6	4, 5	-	LOBBY ENTRY - STOREFRONT
S401a	3'-0"	7'-0"	1 3/4"	HM	PTD	C	90M		HM	7	8	9	4	STAIR #1
S401b	3'-0"	7'-0"	1 3/4"	HM	PTD	C	90M		HM	7	8	9	6	STAIR #1; ACCESS CONTROL - CONDO ACCESS
S402	3'-0"	7'-0"	1 3/4"	HM	PTD	C	90M		HM	7	8	9	4	STAIR #2
S403	3'-0"	7'-0"	1 3/4"	HM	PTD	C	90M		HM	7	8	9	4	STAIR #3

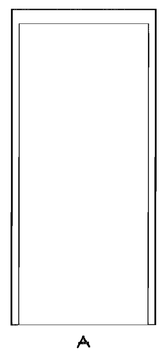

A
HOLLOW METAL
FLUSH DOOR

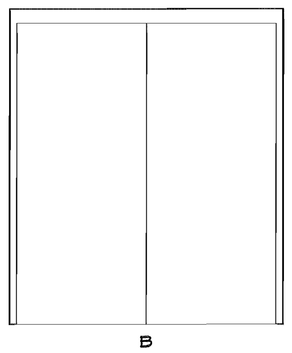

B
HOLLOW METAL
FLUSH DOORS

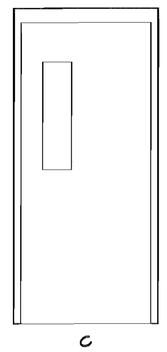

C
HOLLOW METAL
WITH VISION PANEL

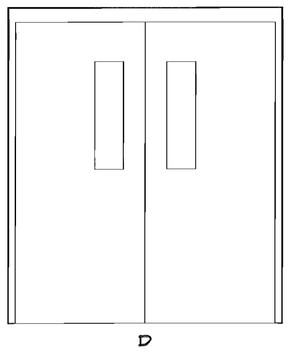

D
HOLLOW METAL
WITH VISION PANEL

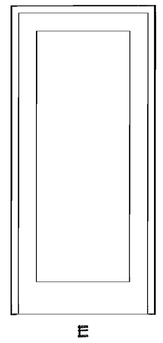

E
ALUMINUM WITH
VISION GLAZING

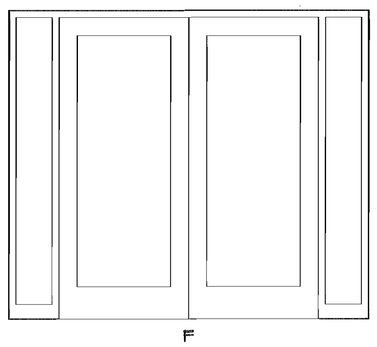

F
ALUMINUM WITH
VISION GLAZING

1 DOOR TYPE ELEVATIONS
SCALE : 1/2" = 1'-0"

FINK ROBERTS & PETRIE, INC
Consulting Engineers
4040 Vincennes Circle
Indianapolis, Indiana 46268

Eddy Street Commons
Phase II
Parking Garage
Project Number 108-004

Owner
City of South Bend, Indiana

Construction Manager
Kite Realty Group
30 South Meridian Street, Suite 1100
Indianapolis, Indiana 46204
317-577-5600

Structural Engineer
Fink, Roberts & Petrie, Inc.
4040 Vincennes Circle, Suite 300
Indianapolis, Indiana 46268
317-872-8400

Architect
Looney Ricks Kiss
175 Toyota Plaza, Suite 600
Memphis, Tennessee 38103
901-521-1440

Mechanical, Electrical & Plumbing Engineer
Circle Design Group
5510 South East Street, Suite F
Indianapolis, Indiana 46227
317-781-6200

Parking Consultant
Walker Parking Consultants
6602 East 75th Street, Suite 210
Indianapolis, Indiana 46250
317-842-6890

Civil Engineer/Landscape Architect
The Troyer Group
550 Union Street
Mishawaka, Indiana 46554
574-259-9976

100% Construction
Documents
January 23, 2008

REVISION DATE	REVISION DESCRIPTION

CERTIFIED BY
JASON CAMERON ROSE
REGISTERED
No. 10500006
STATE OF
INDIANA
PROFESSIONAL ENGINEER
1-23-08

DESIGN DATE	DESIGN PROJECT NO.	DESIGN DRAWN BY	CHECKED BY
01/23/08	07097	JH	JH

SHEET TITLE
DOOR AND FINISH SCHEDULES

SHEET NO.
A201

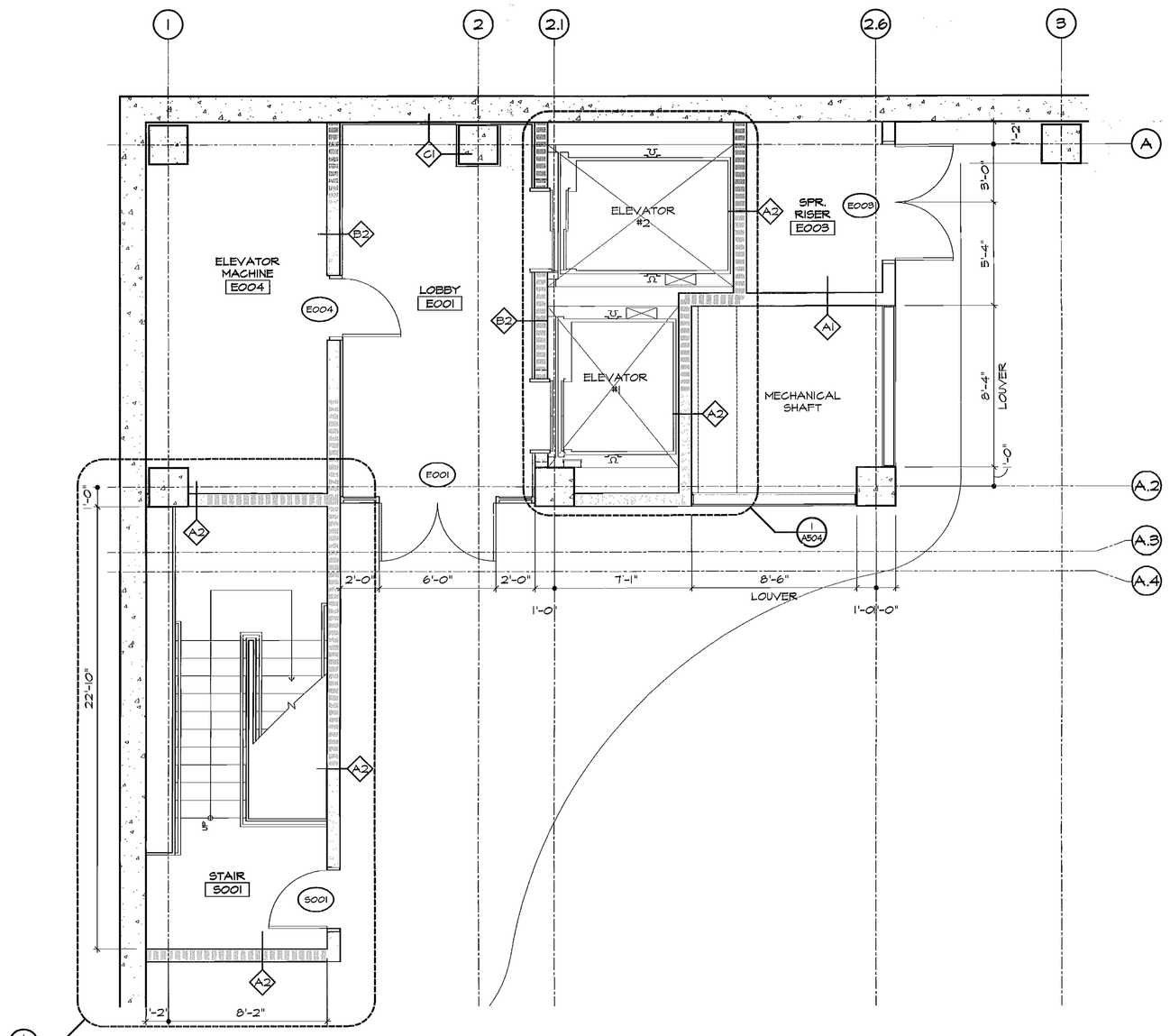

1 BASEMENT LEVEL ENLARGED PLAN

SCALE : 1/4" = 1'-0"

E-B007007

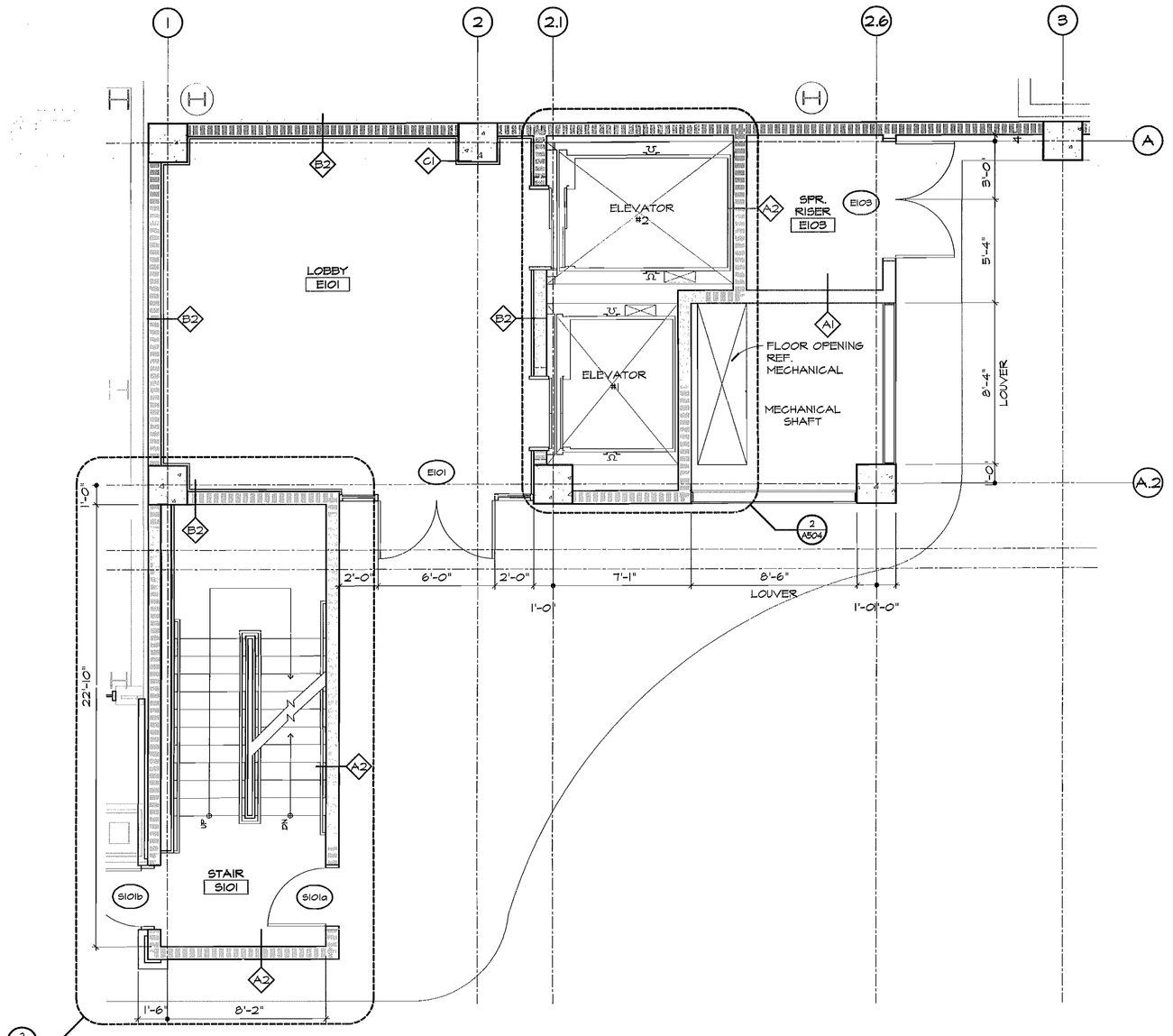

2 GROUND LEVEL ENLARGED PLAN

SCALE : 1/4" = 1'-0"

E-B017007

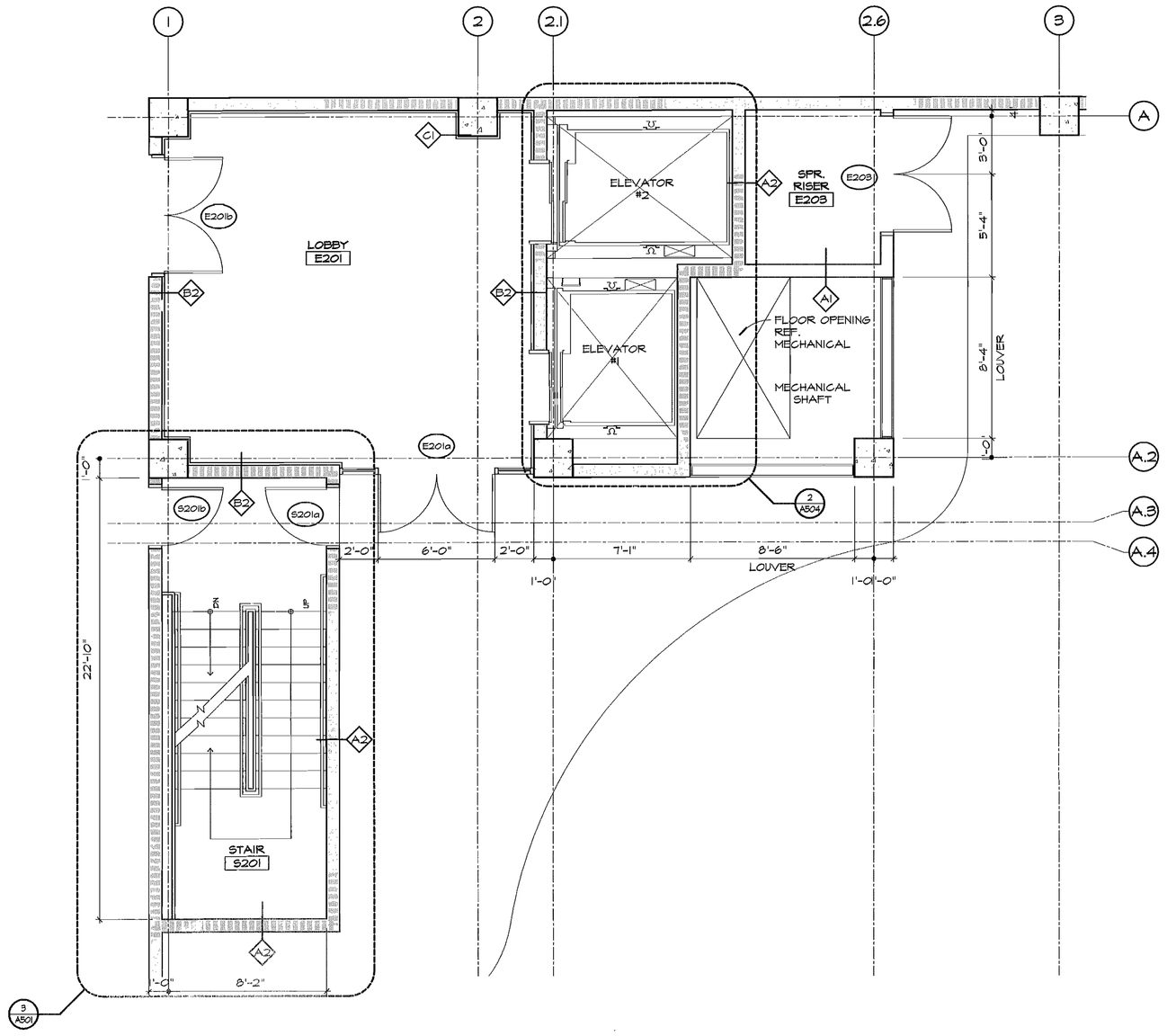

3 SECOND LEVEL ENLARGED PLAN

SCALE : 1/4" = 1'-0"

E-B027007

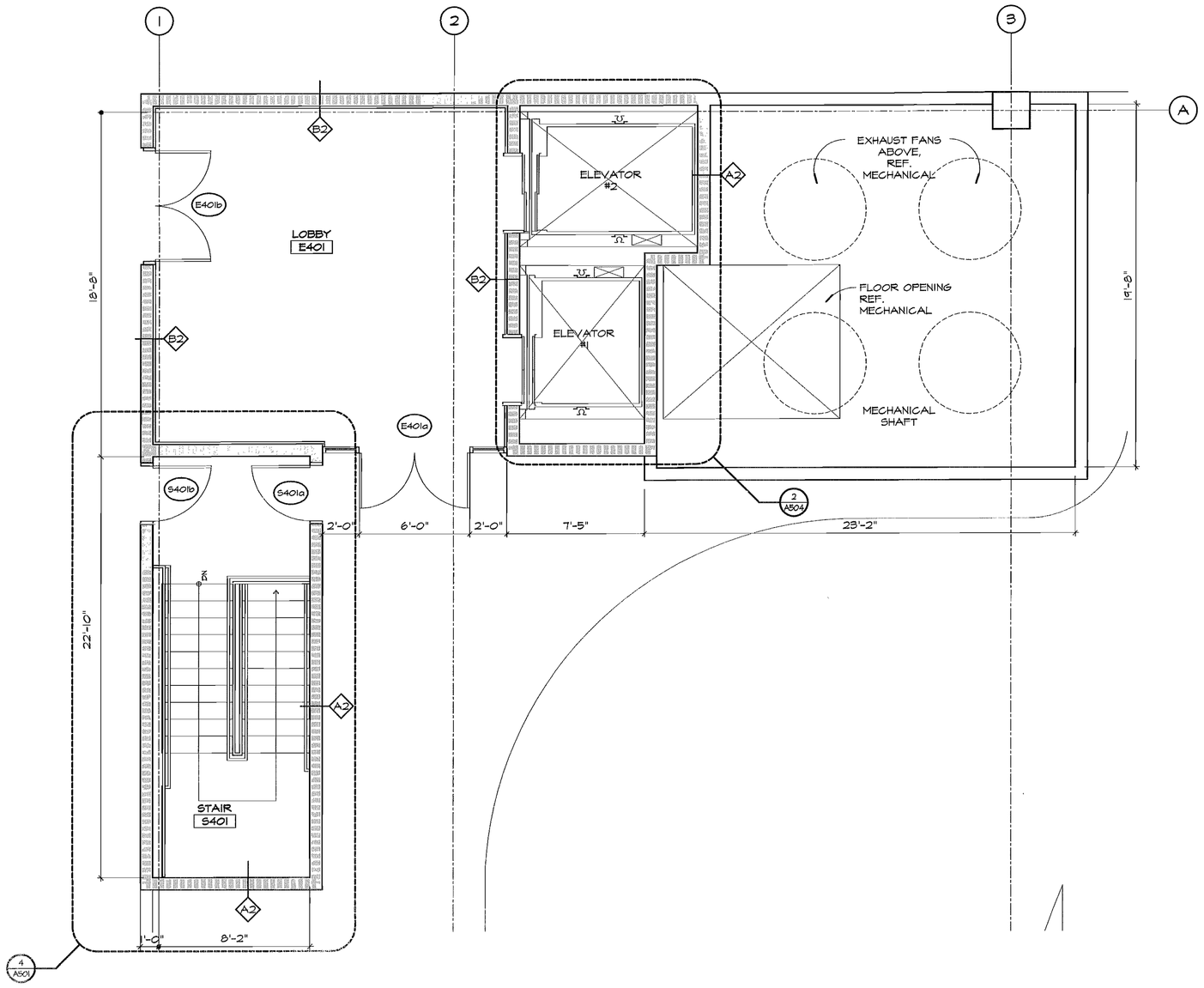

4 FOURTH LEVEL ENLARGED PLAN

SCALE : 1/4" = 1'-0"

E-B047007

FINK ROBERTS & PETRIE, INC.
Consulting Engineers
4040 Vincennes Circle Suite 300
Indianapolis, Indiana 46268

Eddy Street Commons
Phase II
Parking Garage
Project Number 108-004

Owner
City of South Bend, Indiana

Construction Manager
Kite Realty Group
30 South Meridian Street, Suite 1100
Indianapolis, Indiana 46204
317-577-5600

Structural Engineer
Fink, Roberts & Petrie, Inc.
4040 Vincennes Circle, Suite 300
Indianapolis, Indiana 46268
317-872-8400

Architect
Looney Ricks Kiss
175 Toyota Plaza, Suite 600
Memphis, Tennessee 38103
901-521-1440

Mechanical, Electrical & Plumbing Engineer
Circle Design Group
5510 South East Street, Suite F
Indianapolis, Indiana 46227
317-781-6200

Parking Consultant
Walker Parking Consultants
6602 East 75th Street, Suite 210
Indianapolis, Indiana 46250
317-842-6890

Civil Engineer/Landscape Architect
The Troyer Group
550 Union Street
Mishawaka, Indiana 46554
574-259-9976

100% Construction Documents
January 23, 2008

REVISION DATE | REVISION DESCRIPTION

CERTIFIED BY
PAIGE CAMERON CLOSE
REGISTERED
No. 10500056
STATE OF INDIANA
ARCHITECT
1-23-08

DESIGN DATE 01/23/08
DESIGN PROJECT NO. 07097
DESIGN DRAWN BY JG
CHECKED BY JH

SHEET TITLE
ENLARGED LOBBY PLANS

SHEET NO.
A211

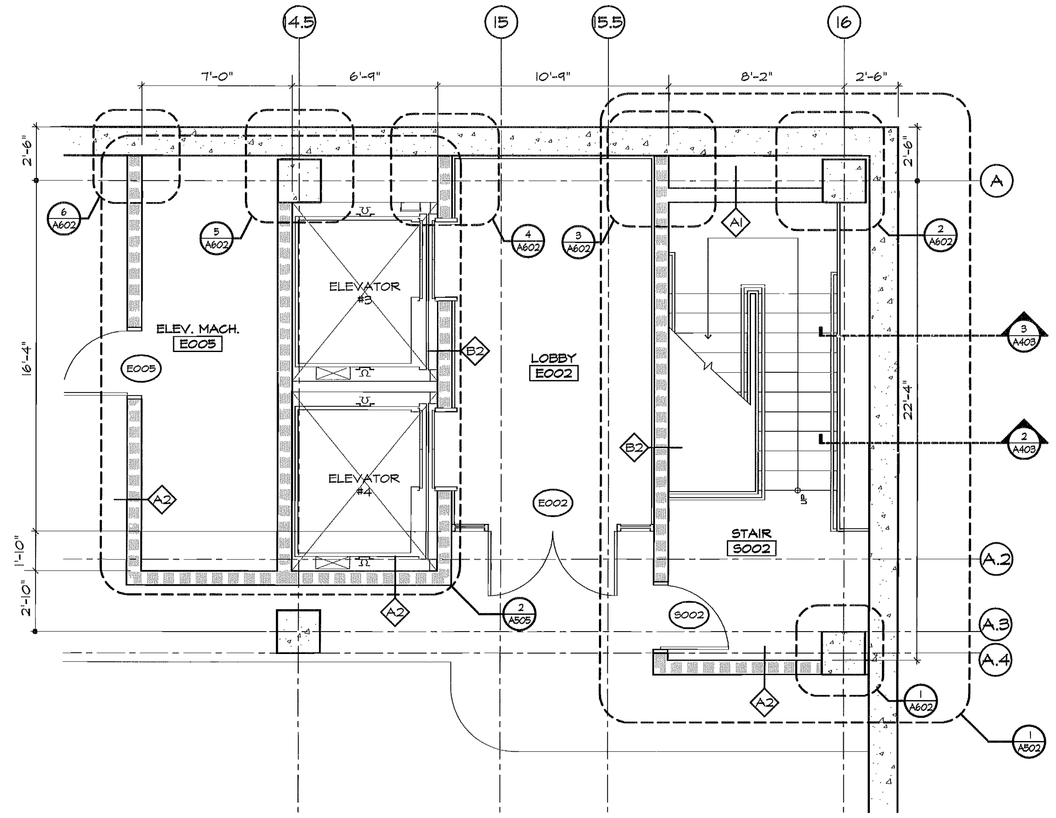

1 BASEMENT LEVEL ENLARGED PLAN

SCALE : 1/4" = 1'-0"

E-B007007

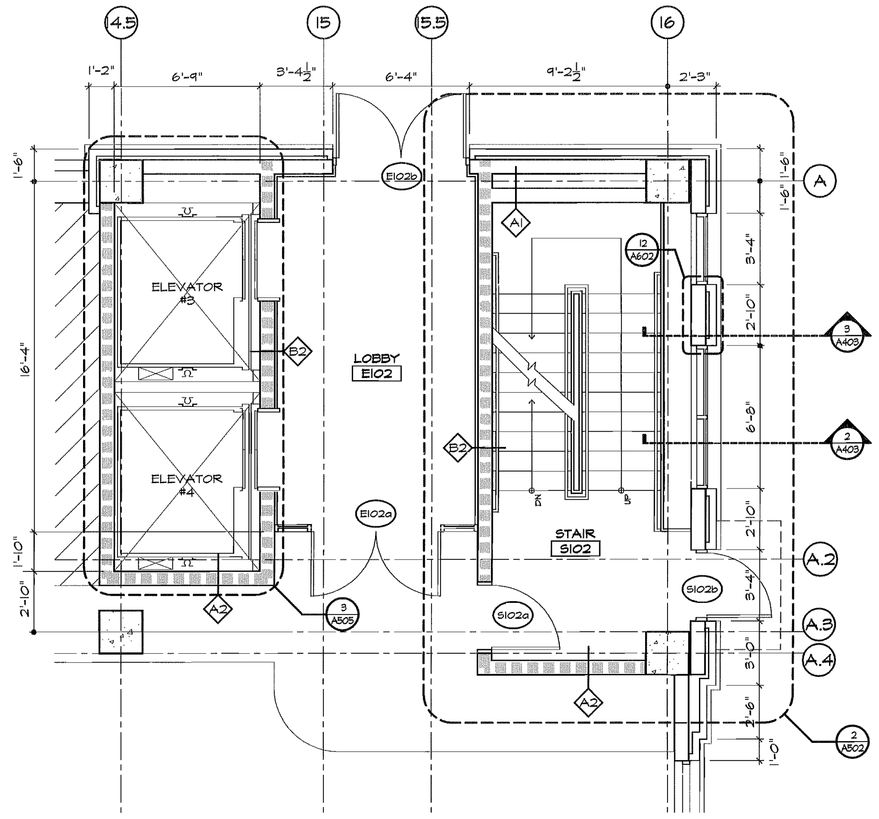

2 GROUND LEVEL ENLARGED PLAN

SCALE : 1/4" = 1'-0"

E-B017007

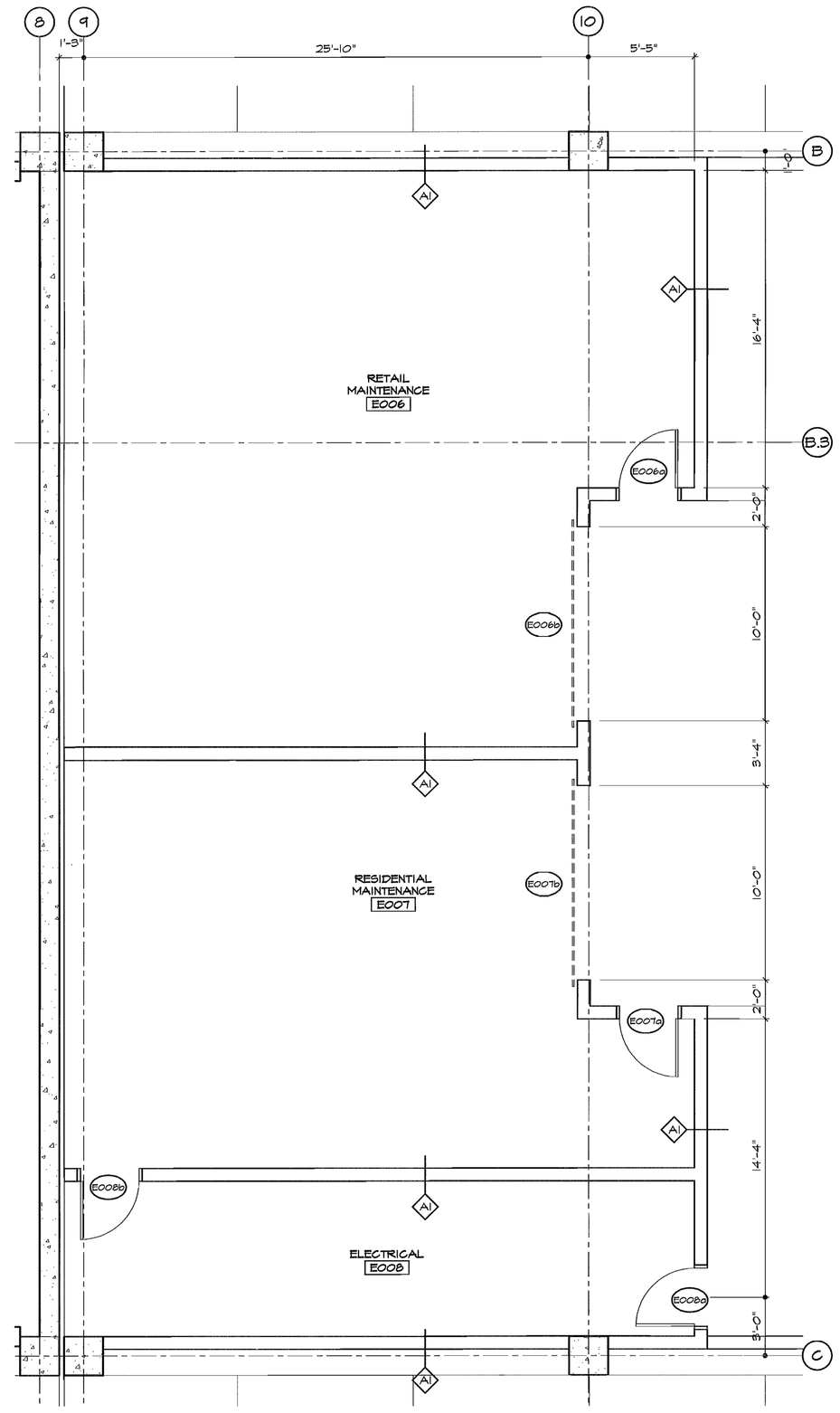

5 BASEMENT LEVEL ENLARGED PLAN

SCALE : 1/4" = 1'-0"

E-B007007

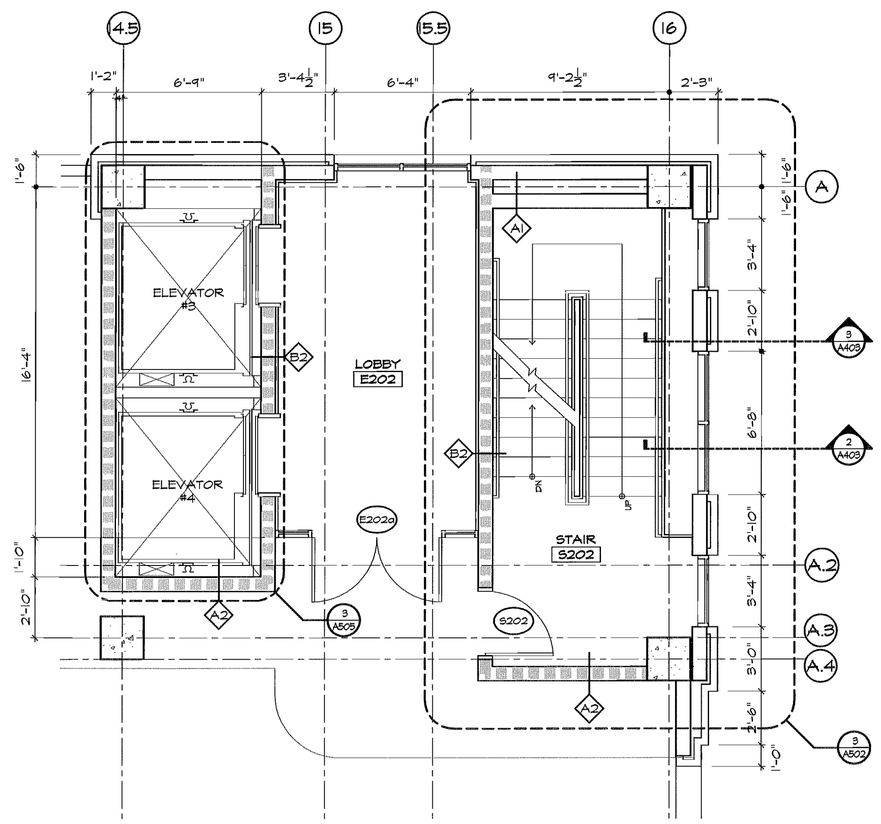

3 SECOND LEVEL ENLARGED PLAN

SCALE : 1/4" = 1'-0"

E-B027007

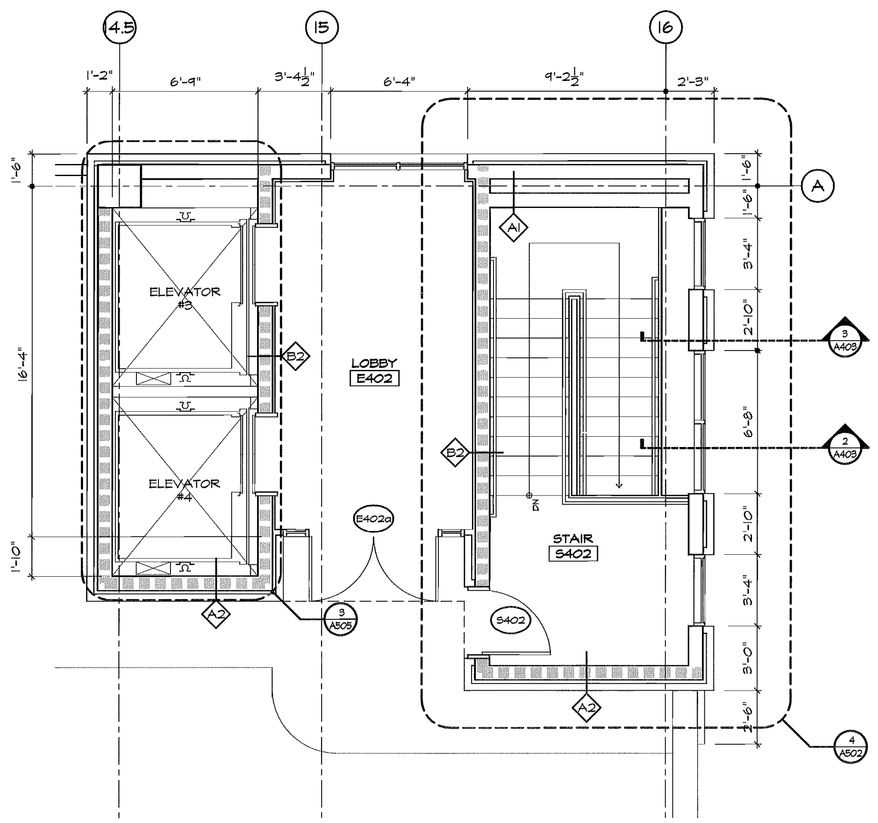

4 FOURTH LEVEL ENLARGED PLAN

SCALE : 1/4" = 1'-0"

E-B047007

FINK ROBERTS & PETRIE INC
Consulting Engineers
Indianapolis, Indiana 46268

Eddy Street Commons
Phase II
Parking Garage
Project Number 108-004

Owner
City of South Bend, Indiana

Construction Manager
Kite Realty Group
30 South Meridian Street, Suite 1100
Indianapolis, Indiana 46204
317-577-5600

Structural Engineer
Fink, Roberts & Petrie, Inc.
4940 Viscennes Circle, Suite 300
Indianapolis, Indiana 46268
317-872-8400

Architect
Looney Ricks Kiss
175 Toyota Plaza, Suite 600
Memphis, Tennessee 38103
901-521-1440

Mechanical, Electrical & Plumbing Engineer
Circle Design Group
5510 South East Street, Suite F
Indianapolis, Indiana 46227
317-781-6200

Parking Consultant
Walker Parking Consultants
6602 East 75th Street, Suite 210
Indianapolis, Indiana 46250
317-842-6890

Civil Engineer/Landscape Architect
The Troyer Group
550 Union Street
Mishawaka, Indiana 46554
574-259-9976

100% Construction Documents
January 23, 2008

REVISION DESCRIPTION

REVISION DATE

CERTIFIED BY
PAUL CAMERON JOSE
REGISTERED
No. 10500056
STATE OF INDIANA
1-23-08

DESIGN DATE	DESIGN PROJECT NO.	DESIGN DRAWN BY	DESIGNED BY
01/23/08	07097	CG	JH

SHEET TITLE
ENLARGED PLANS

SHEET NO.
A212

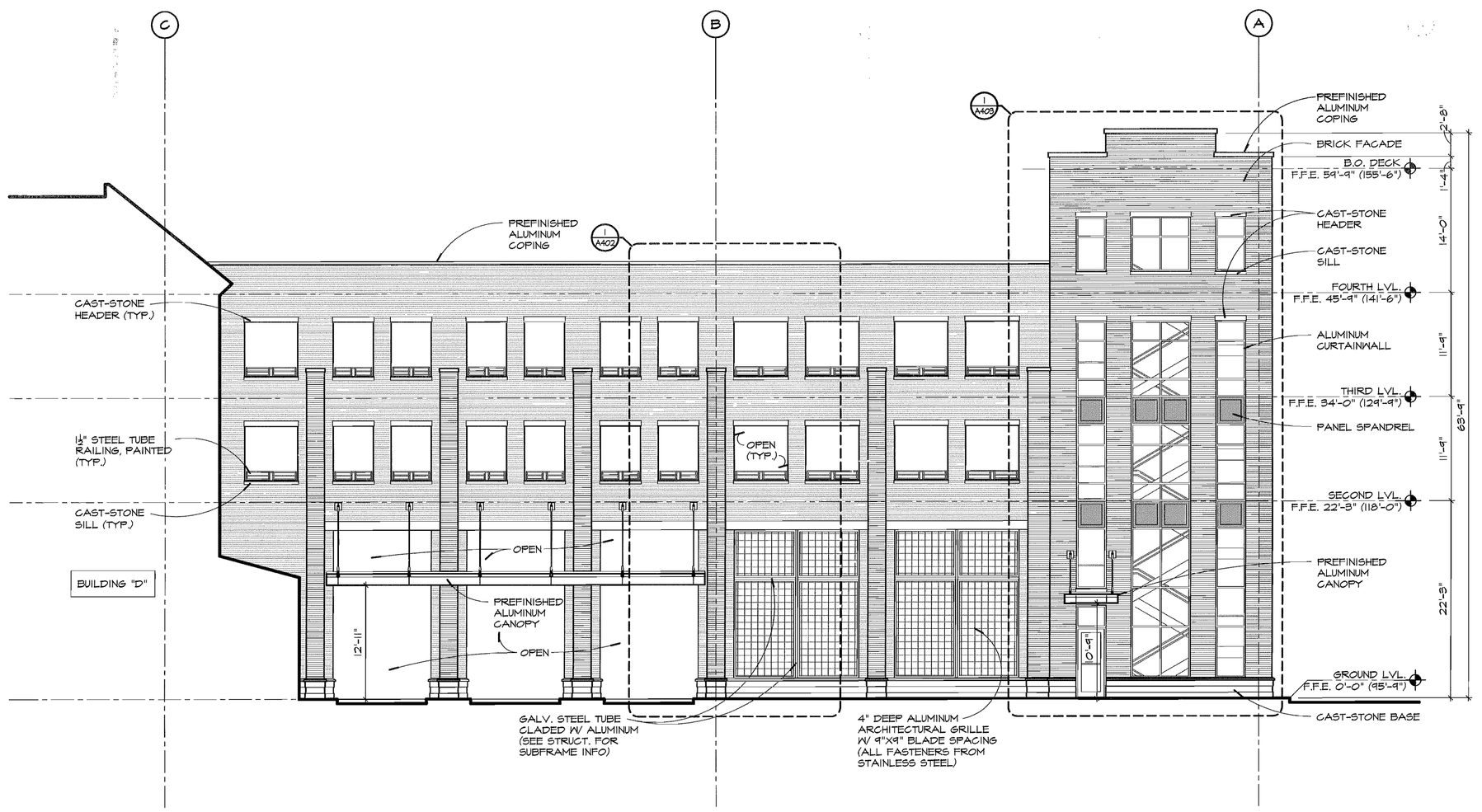

1 PARTIAL STREET ELEVATION - EAST

SCALE : 1/8" = 1'-0"

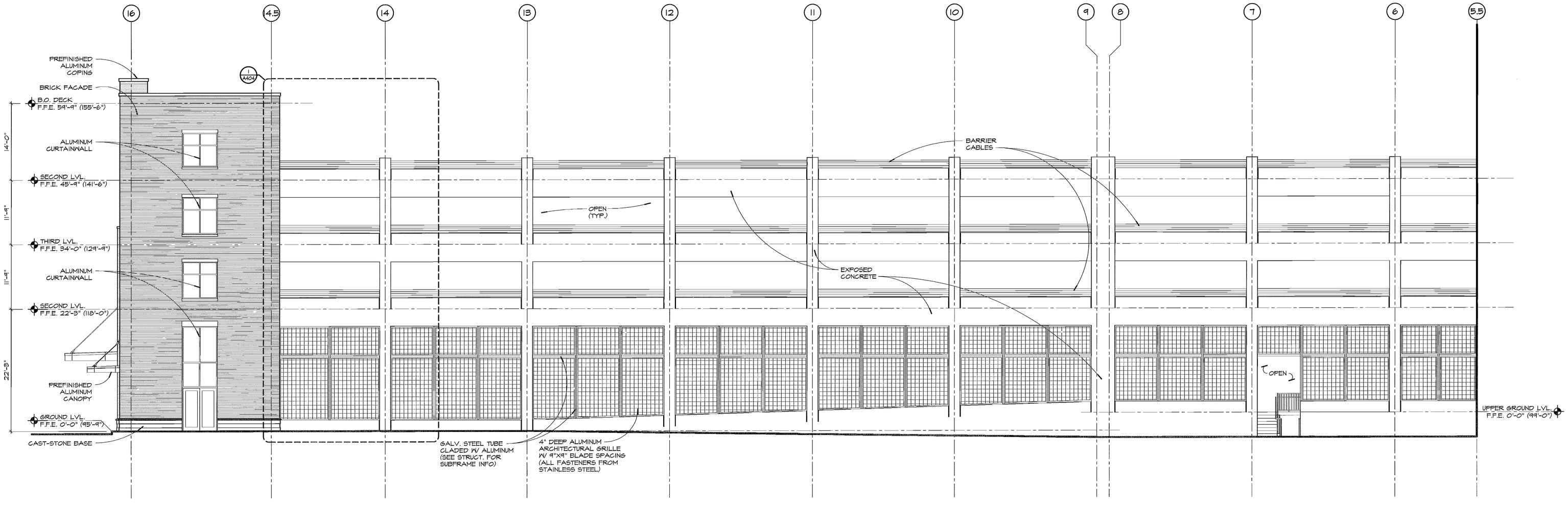

2 PARTIAL ALLEY ELEVATION - NORTH

SCALE : 1/8" = 1'-0"

FINK ROBERTS & PETRIE, INC.
Consulting Engineers
4040 Vincennes Circle Suite 300
Indianapolis, Indiana 46268

Eddy Street Commons
Phase II
Parking Garage
Project Number 108-004

Owner
City of South Bend, Indiana

Construction Manager
Kite Realty Group
30 South Meridian Street, Suite 1100
Indianapolis, Indiana 46204
317-577-5600

Structural Engineer
Fink, Roberts & Petrie, Inc.
4040 Vincennes Circle, Suite 300
Indianapolis, Indiana 46268
317-872-8400

Architect
Looney Ricks Kiss
175 Toyota Plaza, Suite 600
Memphis, Tennessee 38103
901-521-1440

Mechanical, Electrical & Plumbing Engineer
Circle Design Group
5510 South East Street, Suite F
Indianapolis, Indiana 46227
317-781-6200

Parking Consultant
Walker Parking Consultants
6602 East 75th Street, Suite 210
Indianapolis, Indiana 46250
317-842-6890

Civil Engineer/Landscape Architect
The Troyer Group
550 Union Street
Mishawaka, Indiana 46554
574-259-9976

100% Construction Documents
January 23, 2008

CERTIFIED BY
PAUL CAMERON CLUTE
REGISTERED
No. 10500056
STATE OF INDIANA
ARCHITECT
1-23-08

DESIGN DATE 01/23/08
DESIGN PROJECT NO. 07097
DESIGN DRAWN BY MV
CHECKED BY MV

SHEET TITLE
BUILDING ELEVATIONS

SHEET NO.
A301

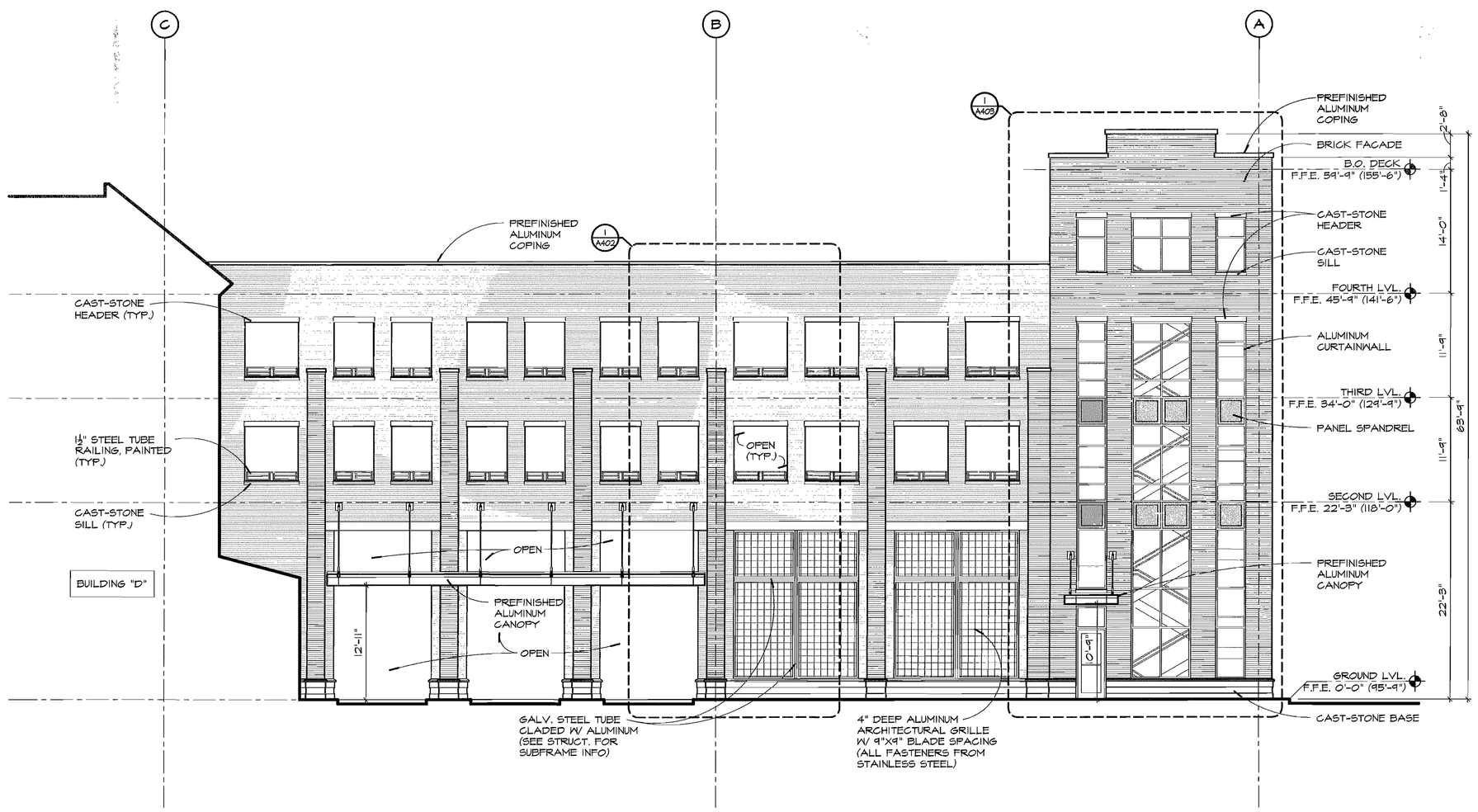

1 PARTIAL STREET ELEVATION - EAST

SCALE : 1/8" = 1'-0"

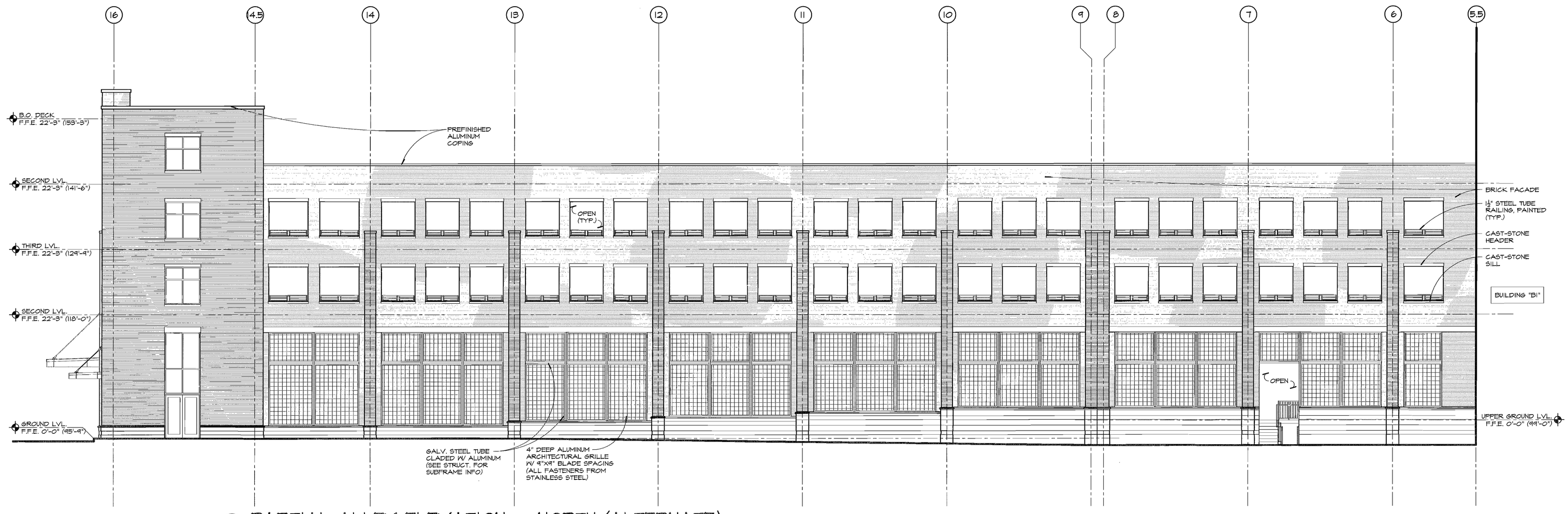

2 PARTIAL ALLEY ELEVATION - NORTH (ALTERNATE)

SCALE : 1/8" = 1'-0"

FINK ROBERTS & PETRIE, INC.
Consulting Engineers
4040 Vincennes Circle Suite 300
Indianapolis, Indiana 46268

Eddy Street Commons
Phase II
Parking Garage
Project Number 108-004

Owner
City of South Bend, Indiana

Construction Manager
Kite Realty Group
30 South Meridian Street, Suite 1100
Indianapolis, Indiana 46204
317-577-5600

Structural Engineer
Fink, Roberts & Petrie, Inc.
4040 Vincennes Circle, Suite 300
Indianapolis, Indiana 46268
317-872-8400

Architect
Looney Ricks Kiss
175 Toyota Plaza, Suite 600
Memphis, Tennessee 38103
901-521-1440

Mechanical, Electrical & Plumbing Engineer
Circle Design Group
5510 South East Street, Suite F
Indianapolis, Indiana 46227
317-781-6200

Parking Consultant
Walker Parking Consultants
6602 East 75th Street, Suite 210
Indianapolis, Indiana 46250
317-842-6890

Civil Engineer/Landscape Architect
The Troyer Group
550 Union Street
Mishawaka, Indiana 46554
574-259-9976

100% Construction Documents
January 23, 2008

REVISION DATE
REVISION DESCRIPTION

CERTIFIED BY
CAMERON C. REGISTERED No. 10500056 STATE OF INDIANA ARCHITECT
1-23-08

DESIGN DATE 01/23/08
DESIGN PROJECT NO. 07097
DESIGN DRAWN BY MV
CHECKED BY MV

SHEET TITLE
BUILDING ELEVATIONS (ALTERNATE NO.1)

SHEET NO.
A301a

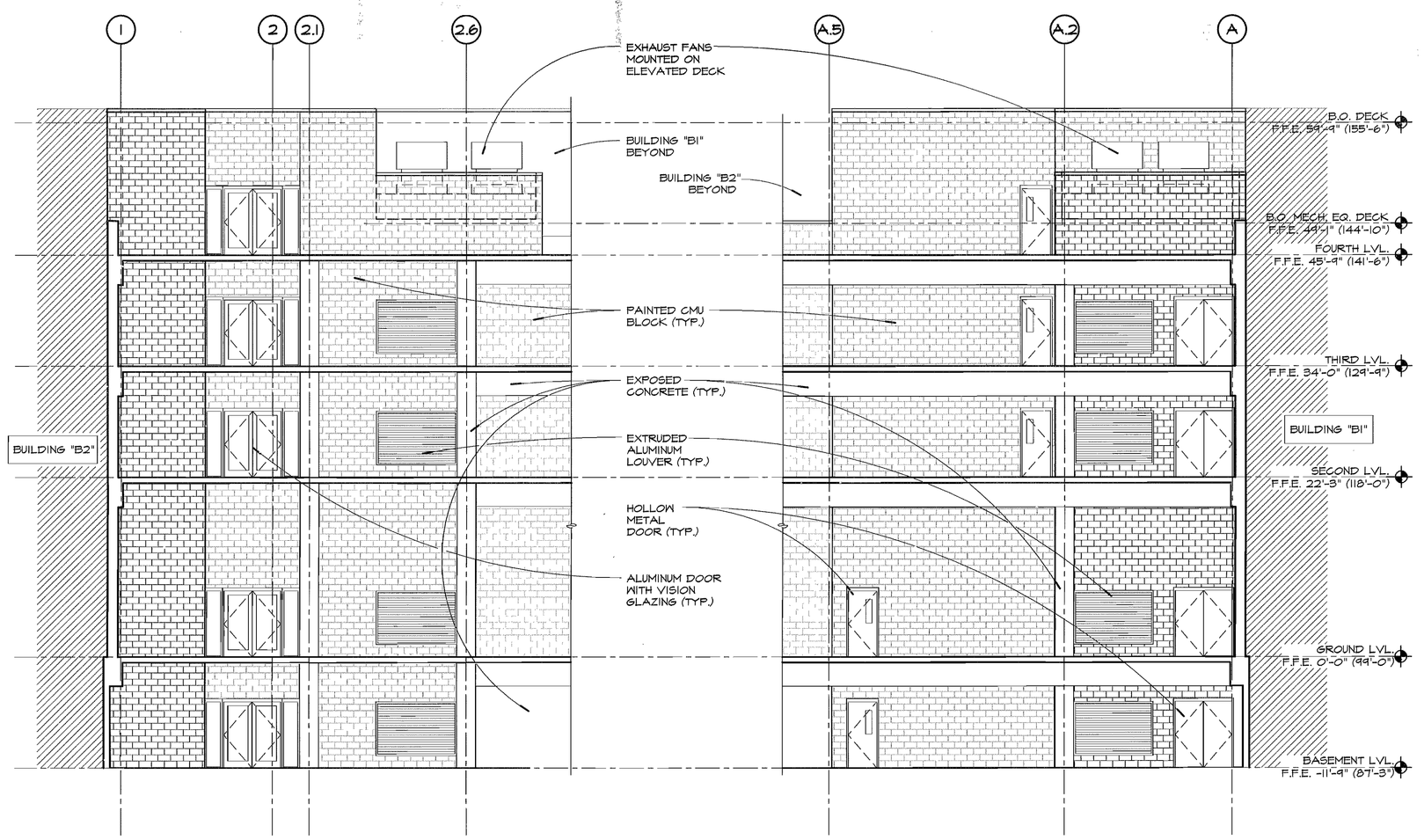

1 HIDDEN ELEVATION 1
SCALE : 1/8" = 1'-0"

2 HIDDEN ELEVATION 2
SCALE : 1/8" = 1'-0"

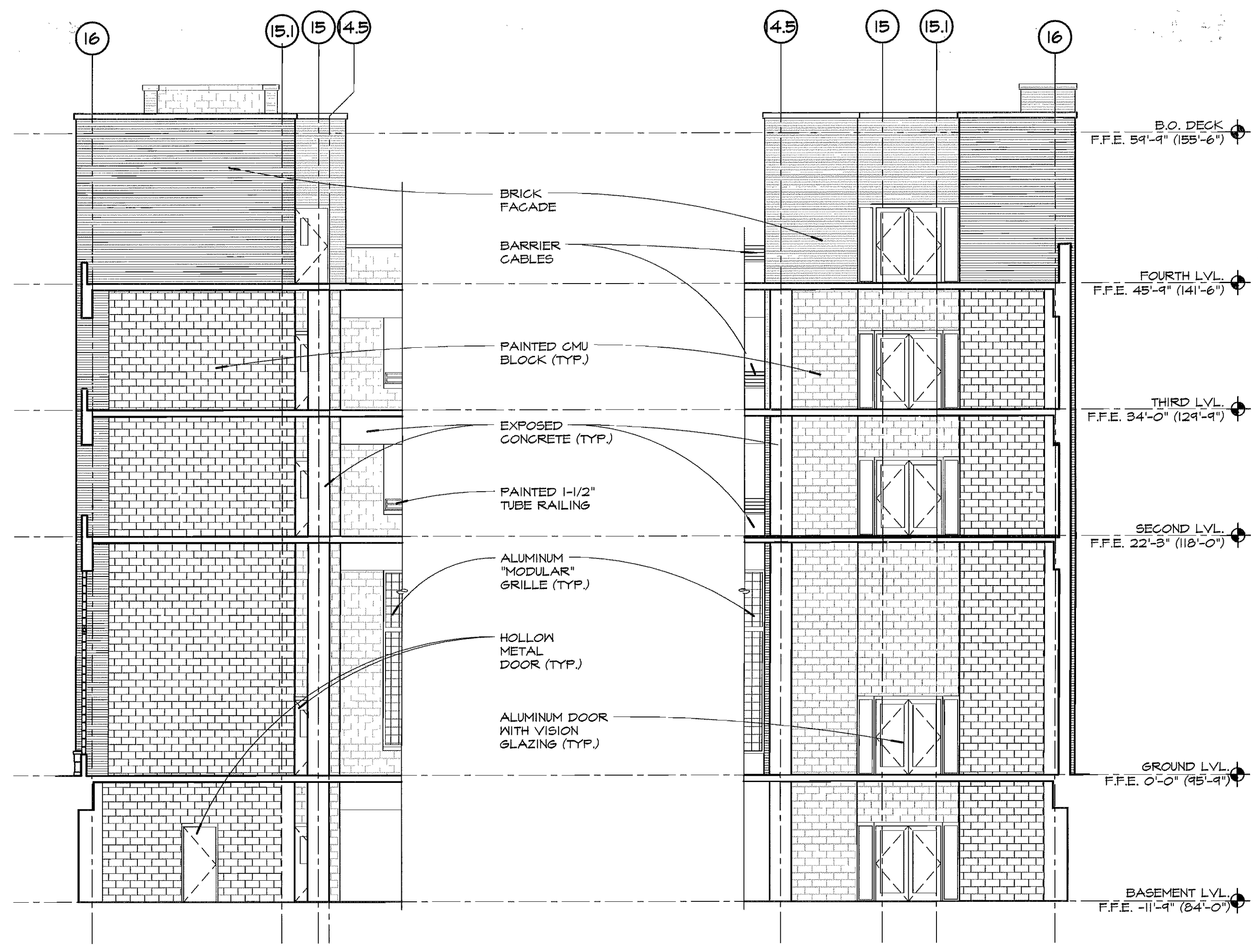

3 HIDDEN ELEVATION 3
SCALE : 1/8" = 1'-0"

4 HIDDEN ELEVATION 4
SCALE : 1/8" = 1'-0"

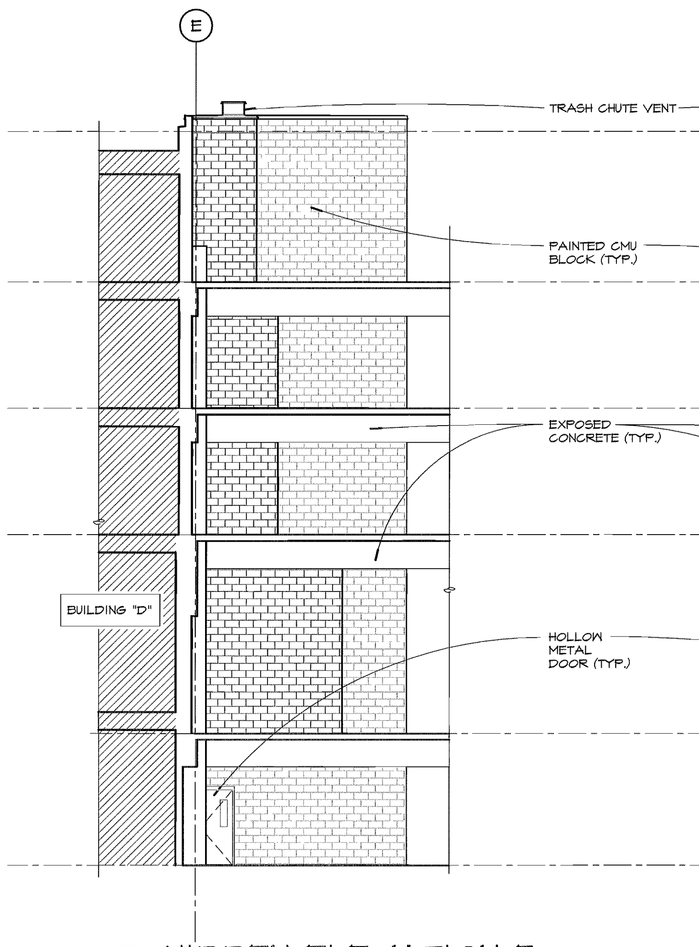

5 HIDDEN ELEVATION 5
SCALE : 1/8" = 1'-0"

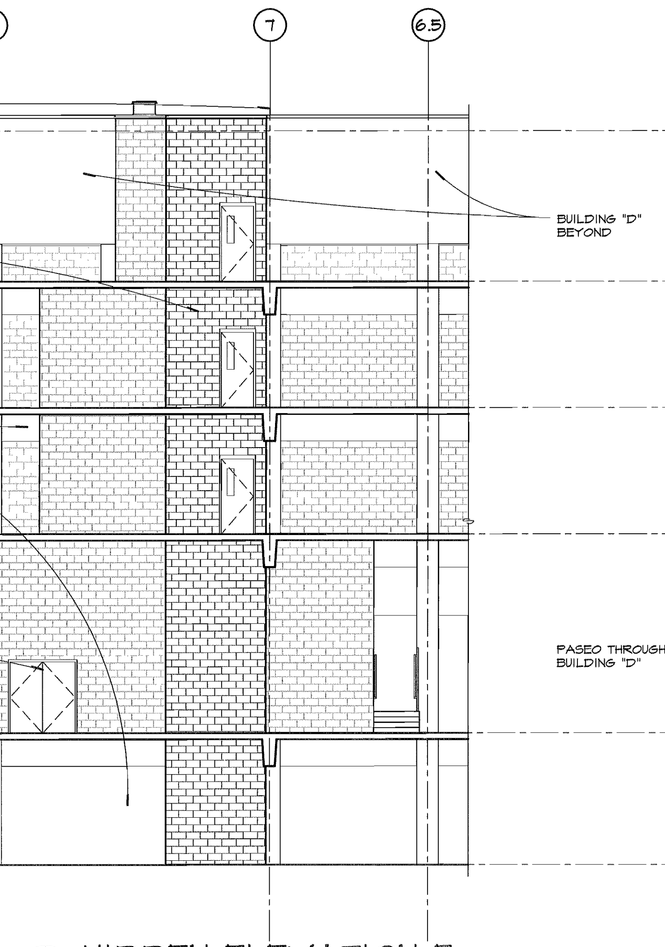

5 HIDDEN ELEVATION 5
SCALE : 1/8" = 1'-0"

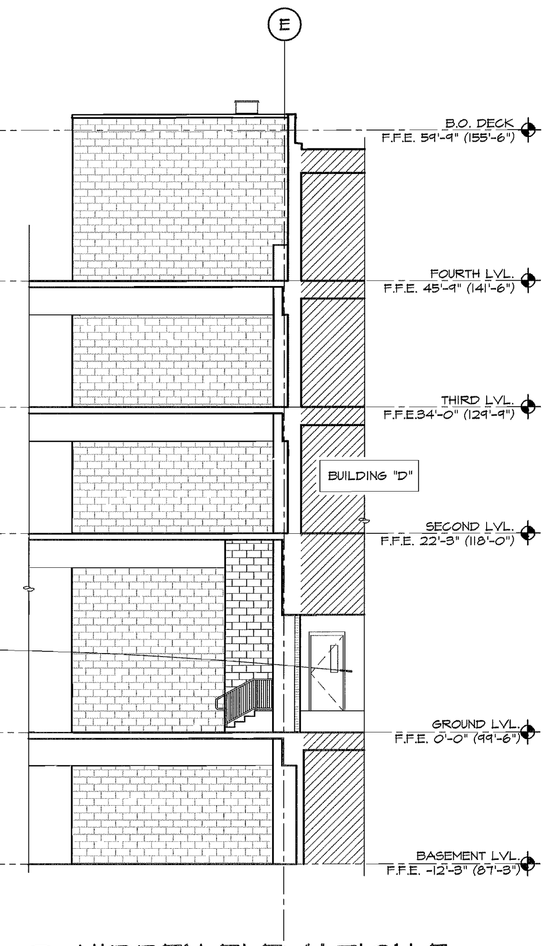

5 HIDDEN ELEVATION 5
SCALE : 1/8" = 1'-0"

FINK, ROBERTS & PETRIE, INC.
Consulting Engineers
4040 Vincennes Circle, Suite 300
Indianapolis, Indiana 46268

Eddy Street Commons
Phase II
Parking Garage
Project Number 108-004

Owner
City of South Bend, Indiana

Construction Manager
Kite Realty Group
30 South Meridian Street, Suite 1100
Indianapolis, Indiana 46204
317-577-5600

Structural Engineer
Fink, Roberts & Petrie, Inc.
4040 Vincennes Circle, Suite 300
Indianapolis, Indiana 46268
317-872-8400

Architect
Looney Ricks Kiss
175 Toyota Plaza, Suite 600
Memphis, Tennessee 38103
901-521-1440

Mechanical, Electrical & Plumbing Engineer
Circle Design Group
5510 South East Street, Suite F
Indianapolis, Indiana 46227
317-781-6200

Parking Consultant
Walker Parking Consultants
6602 East 75th Street, Suite 210
Indianapolis, Indiana 46250
317-842-6890

Civil Engineer/Landscape Architect
The Troyer Group
550 Union Street
Mishawaka, Indiana 46554
574-259-9976

100% Construction Documents
January 23, 2008

REGISTERED ARCHITECT
CAMERON J. WHITE
No. 10500056
STATE OF INDIANA
1.23.08

DESIGN DATE 01/23/08
ISSUE/REVISION NO. 07097
DESIGN DRAWN BY MV
CHECKED BY MV

SHEET TITLE
HIDDEN ELEVATIONS

SHEET NO.
A302

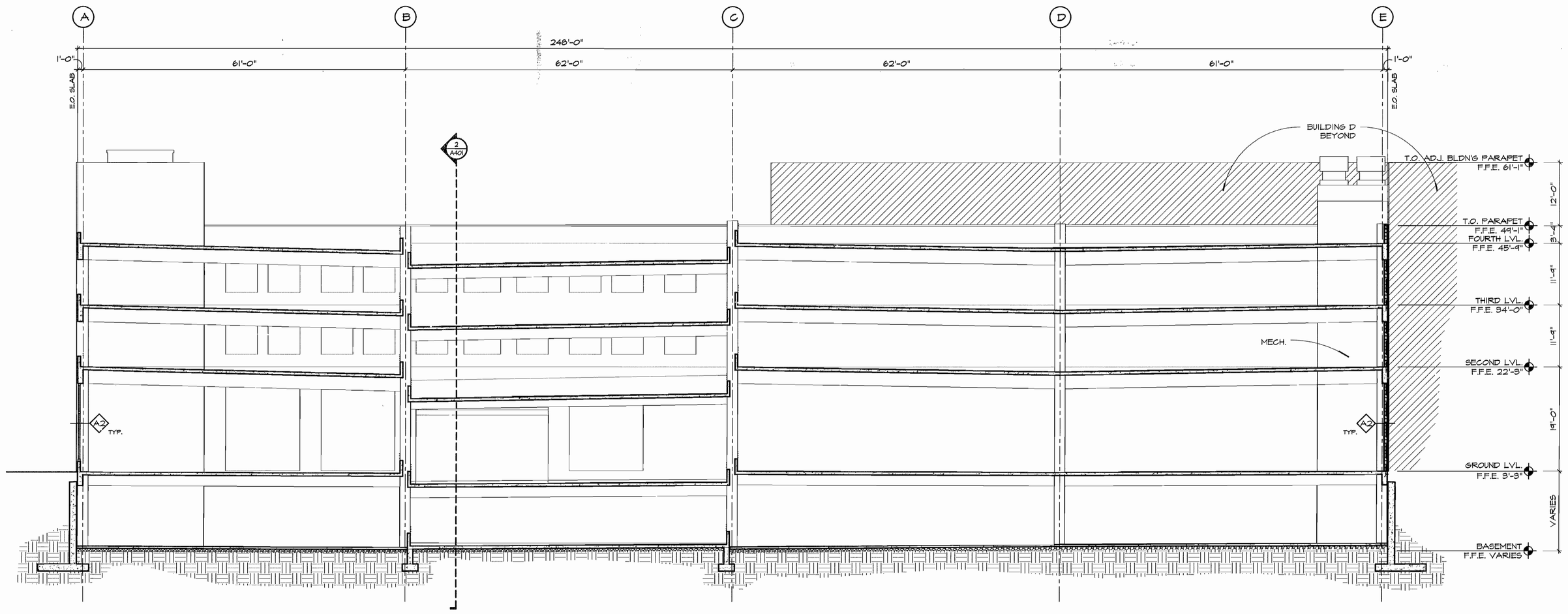

1 TRANSVERSE GARAGE SECTION

SCALE : 3/32" = 1'-0"

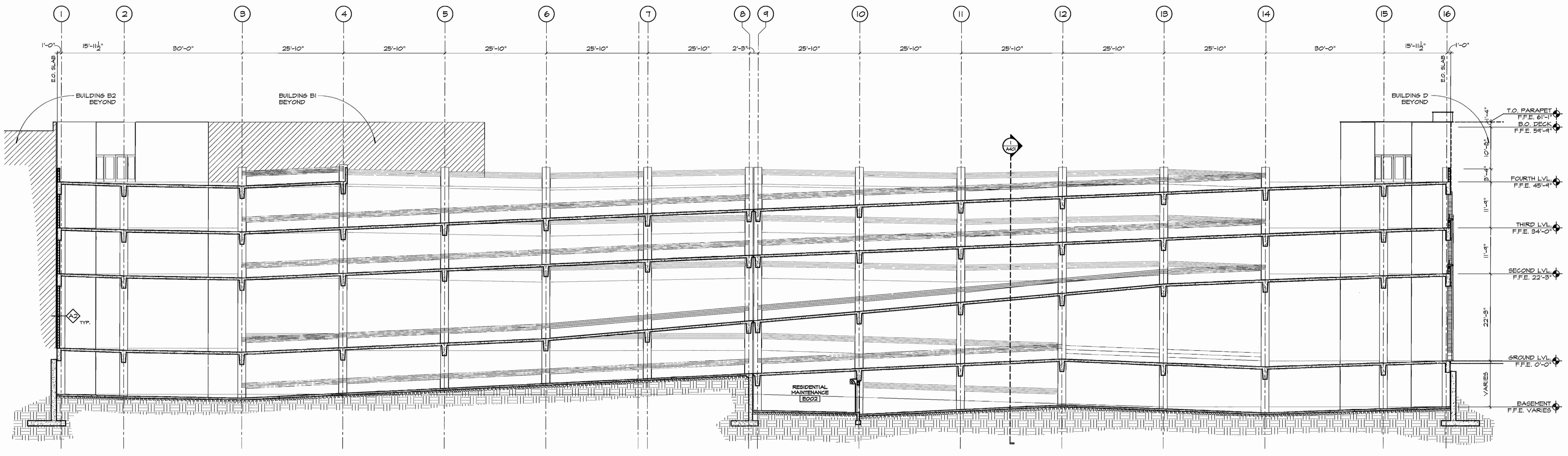

2 LONGITUDINAL GARAGE SECTION AT RAMP

SCALE : 3/32" = 1'-0"

FINK ROBERTS & PETRIE, INC.
Consulting Engineers
4040 Vincennes Circle Suite 300
Indianapolis, Indiana 46268

Eddy Street Commons
Phase II
Parking Garage
Project Number 108-004

Owner
City of South Bend, Indiana

Construction Manager
Kite Realty Group
30 South Meridian Street, Suite 1100
Indianapolis, Indiana 46204
317-577-5600

Structural Engineer
Fink, Roberts & Petrie, Inc.
4040 Vincennes Circle, Suite 300
Indianapolis, Indiana 46268
317-872-8400

Architect
Looney Ricks Kiss
175 Toyota Plaza, Suite 600
Memphis, Tennessee 38103
901-521-1440

Mechanical, Electrical & Plumbing Engineer
Circle Design Group
5510 South East Street, Suite F
Indianapolis, Indiana 46227
317-781-6200

Parking Consultant
Walker Parking Consultants
6602 East 75th Street, Suite 210
Indianapolis, Indiana 46250
317-842-6890

Civil Engineer/Landscape Architect
The Troyer Group
550 Union Street
Mishawaka, Indiana 46554
574-259-9976

100% Construction Documents
January 23, 2008

CERTIFIED BY
PAIGE CAMERON LOSE
REGISTERED
No. 10500056
STATE OF INDIANA
ARCHITECT
1-23-08

DESIGN DATE 01/23/08
DESIGN PROJECT NO. 07097
DESIGN DRAWN BY MV
CHECKED BY MV

SHEET TITLE
BUILDING SECTIONS

SHEET NO.
A401

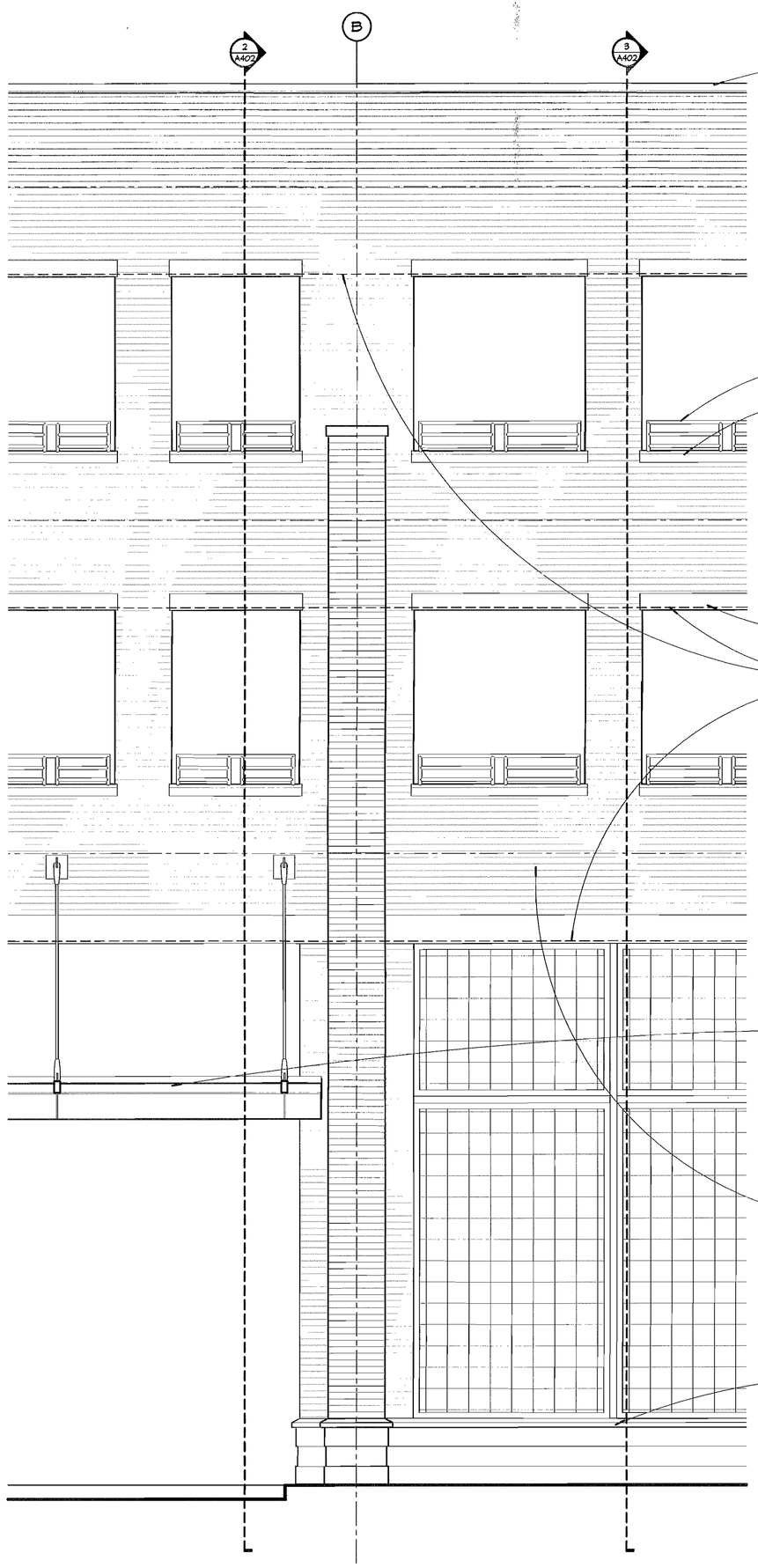

1 ENLARGED ELEVATION
SCALE: 3/8"=1'-0"
E-E017007

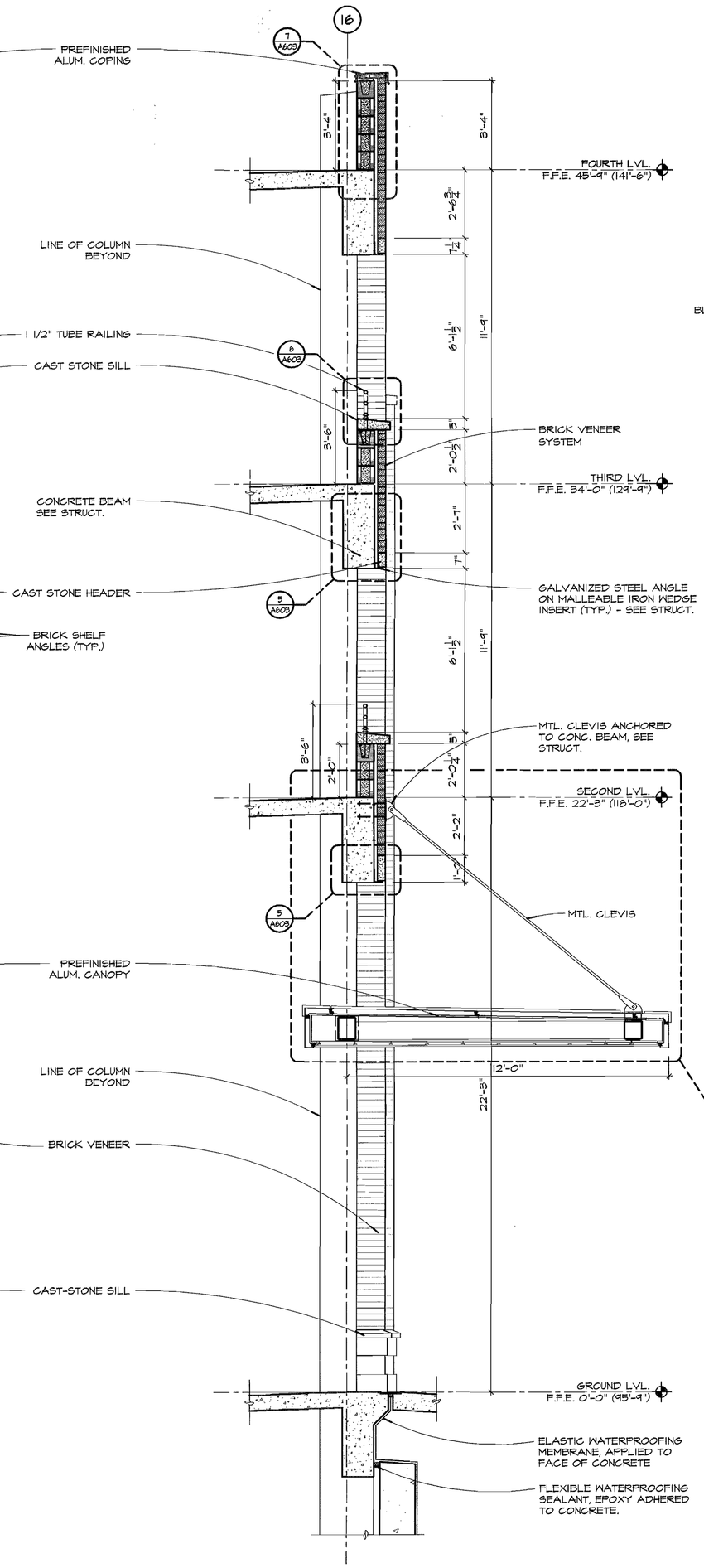

2 WALL SECTION
SCALE: 3/8"=1'-0"
E-WS017007

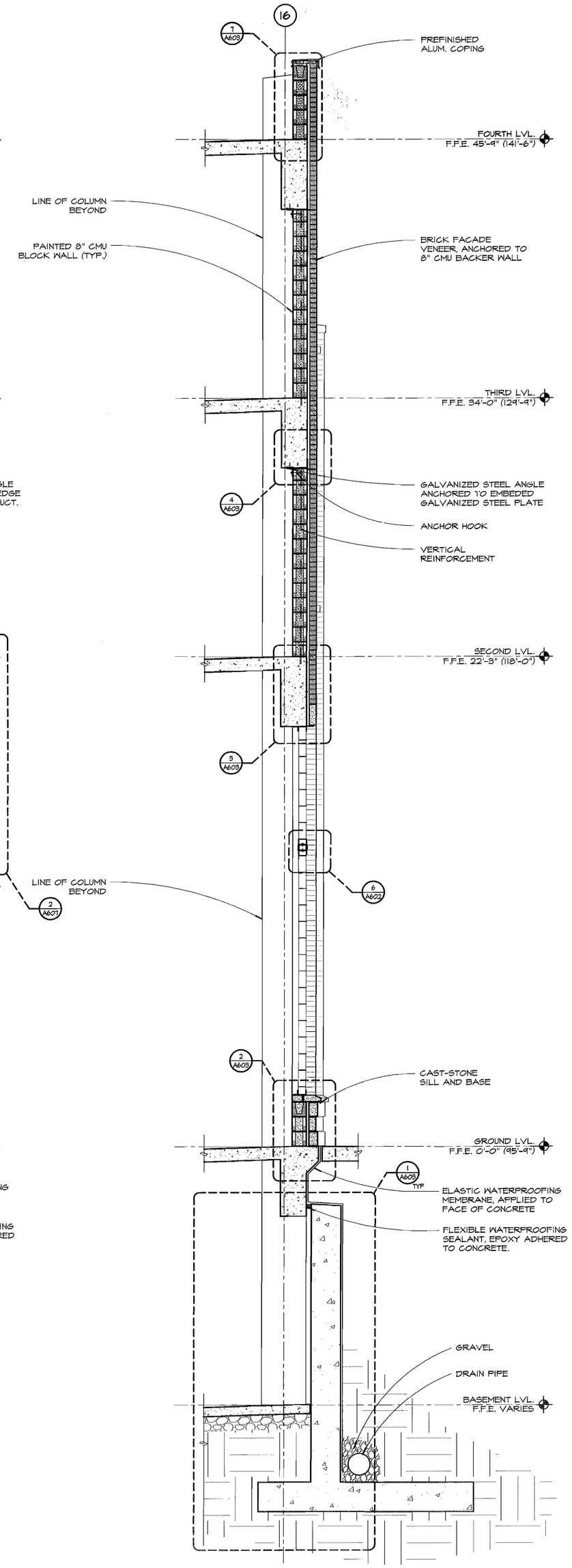

3 WALL SECTION
SCALE: 3/8"=1'-0"
E-WS017007

FINK ROBERTS & PETRIE, INC.
Consulting Engineers
4040 Vincennes Circle Suite 300
Indianapolis, Indiana 46268

Eddy Street Commons
Phase II
Parking Garage
Project Number 108-004

Owner
City of South Bend, Indiana

Construction Manager
Kite Realty Group
30 South Meridian Street, Suite 1100
Indianapolis, Indiana 46204
317-577-5600

Structural Engineer
Fink, Roberts & Petrie, Inc.
4040 Vincennes Circle, Suite 300
Indianapolis, Indiana 46268
317-872-8400

Architect
Looney Ricks Kiss
175 Toyota Plaza, Suite 600
Memphis, Tennessee 38103
901-521-1440

Mechanical, Electrical & Plumbing Engineer
Circle Design Group
5510 South East Street, Suite F
Indianapolis, Indiana 46227
317-781-6200

Parking Consultant
Walker Parking Consultants
6602 East 75th Street, Suite 210
Indianapolis, Indiana 46250
317-842-6890

Civil Engineer/Landscape Architect
The Troyer Group
550 Union Street
Mishawaka, Indiana 46554
574-259-9976

100% Construction Documents
January 23, 2008

REVISION DATE
REVISION DESCRIPTION

PAUL CAMERON CLOSE
REGISTERED
No. 10500056
STATE OF INDIANA
PROFESSIONAL ENGINEER
1-23-08

CHECKED BY

DESIGN DATE	DESIGN PROJECT NO.	DESIGN DRAWN BY	CHECKED BY
01/23/08	07097	MV	MV

SHEET TITLE
ENLARGED ELEVATIONS / WALL SECTIONS

SHEET NO.
A402

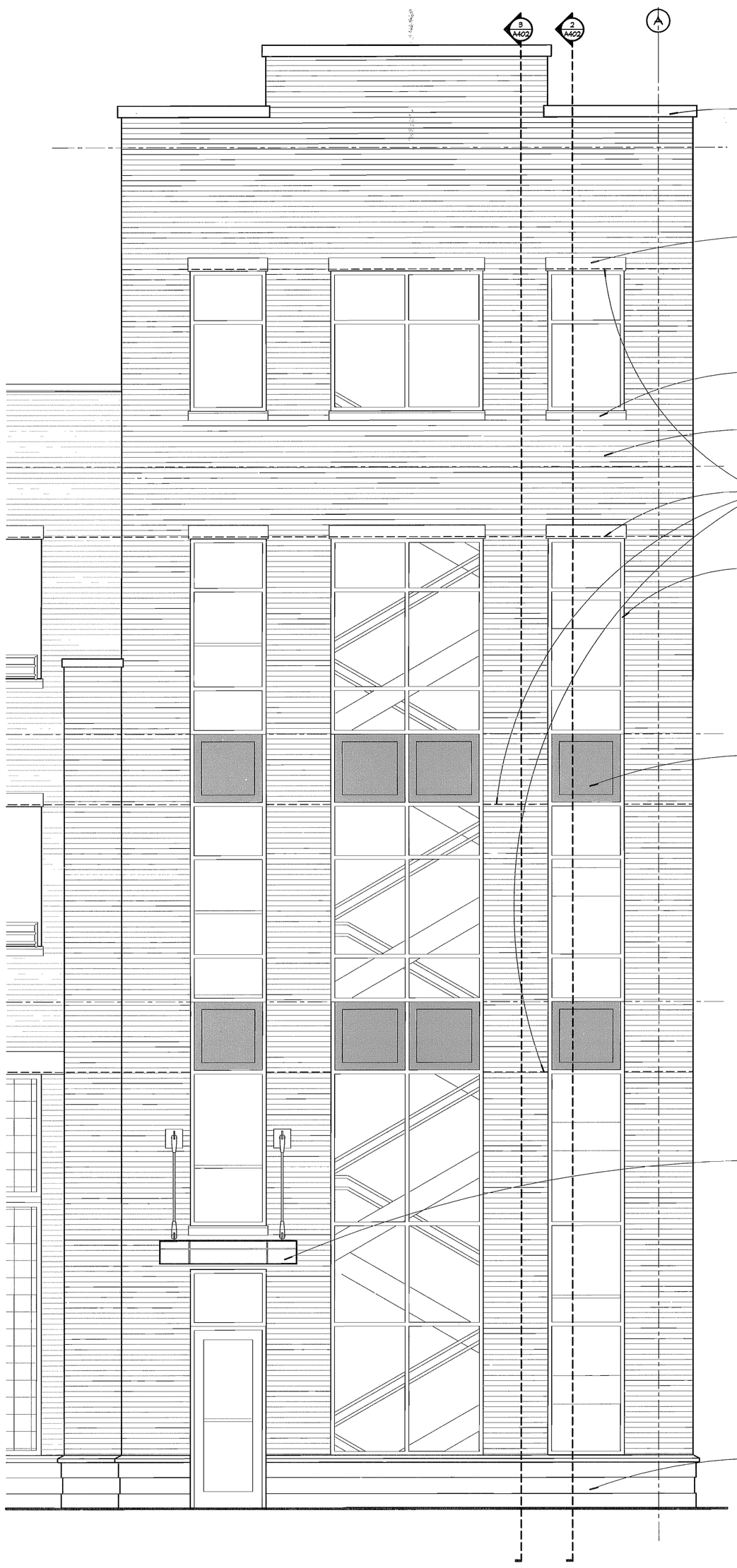

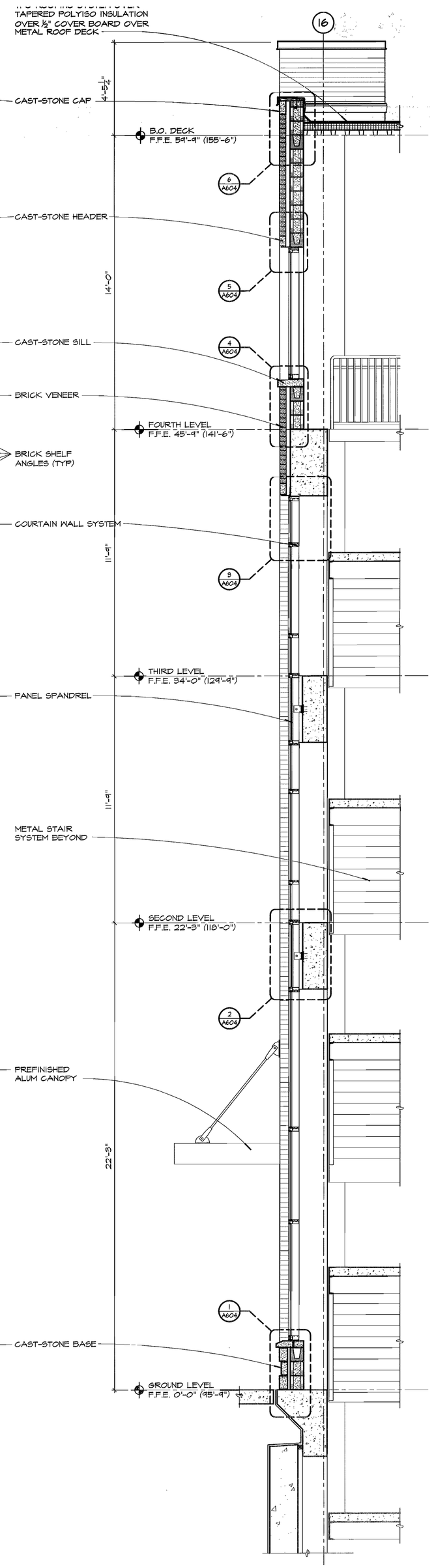

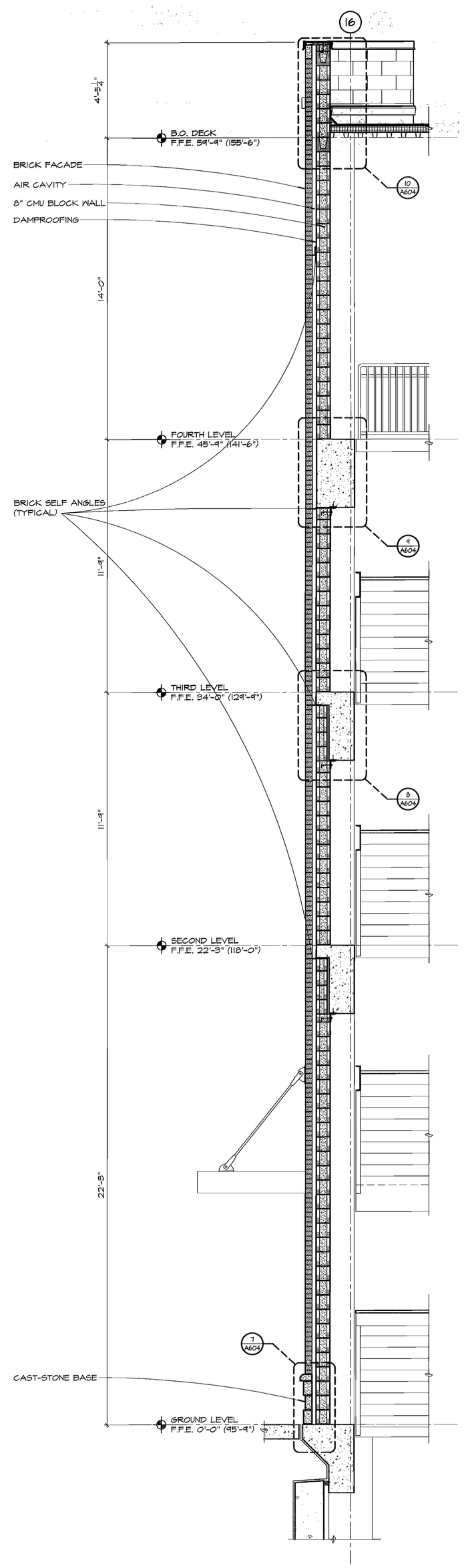

1 ENLARGED ELEVATION
SCALE: 3/8"=1'-0"
E-E017007

2 WALL SECTION
SCALE: 3/8"=1'-0"
E-WS017007

3 WALL SECTION
SCALE: 3/8"=1'-0"
E-WS017007

FINK ROBERTS & PETRIE, INC.
Consulting Engineers
4040 Vincennes Circle Suite 300
Indianapolis, Indiana 46268

Eddy Street Commons
Phase II
Parking Garage
Project Number 108-004

Owner
City of South Bend, Indiana

Construction Manager
Kite Realty Group
30 South Meridian Street, Suite 1100
Indianapolis, Indiana 46204
317-577-5600

Structural Engineer
Fink, Roberts & Petrie, Inc.
4040 Vincennes Circle, Suite 300
Indianapolis, Indiana 46268
317-872-8400

Architect
Looney Ricks Kiss
175 Toyota Plaza, Suite 600
Memphis, Tennessee 38103
901-521-1440

Mechanical, Electrical & Plumbing Engineer
Circle Design Group
5510 South East Street, Suite F
Indianapolis, Indiana 46227
317-781-6200

Parking Consultant
Walker Parking Consultants
6602 East 75th Street, Suite 210
Indianapolis, Indiana 46250
317-842-6890

Civil Engineer/Landscape Architect
The Troyer Group
550 Union Street
Mishawaka, Indiana 46554
574-259-9976

100% Construction Documents
January 23, 2008

PAIGE CAMERON CLOSE
REGISTERED
No. 10500056
STATE OF INDIANA
ARCHITECT
1-23-08

DESIGN DATE 01/23/08
DESIGN PROJECT NO. 07097
DESIGN DRAWN BY MV
CHECKED BY MV

SHEET TITLE
ENLARGED ELEVATIONS / WALL SECTIONS

SHEET NO.
A403

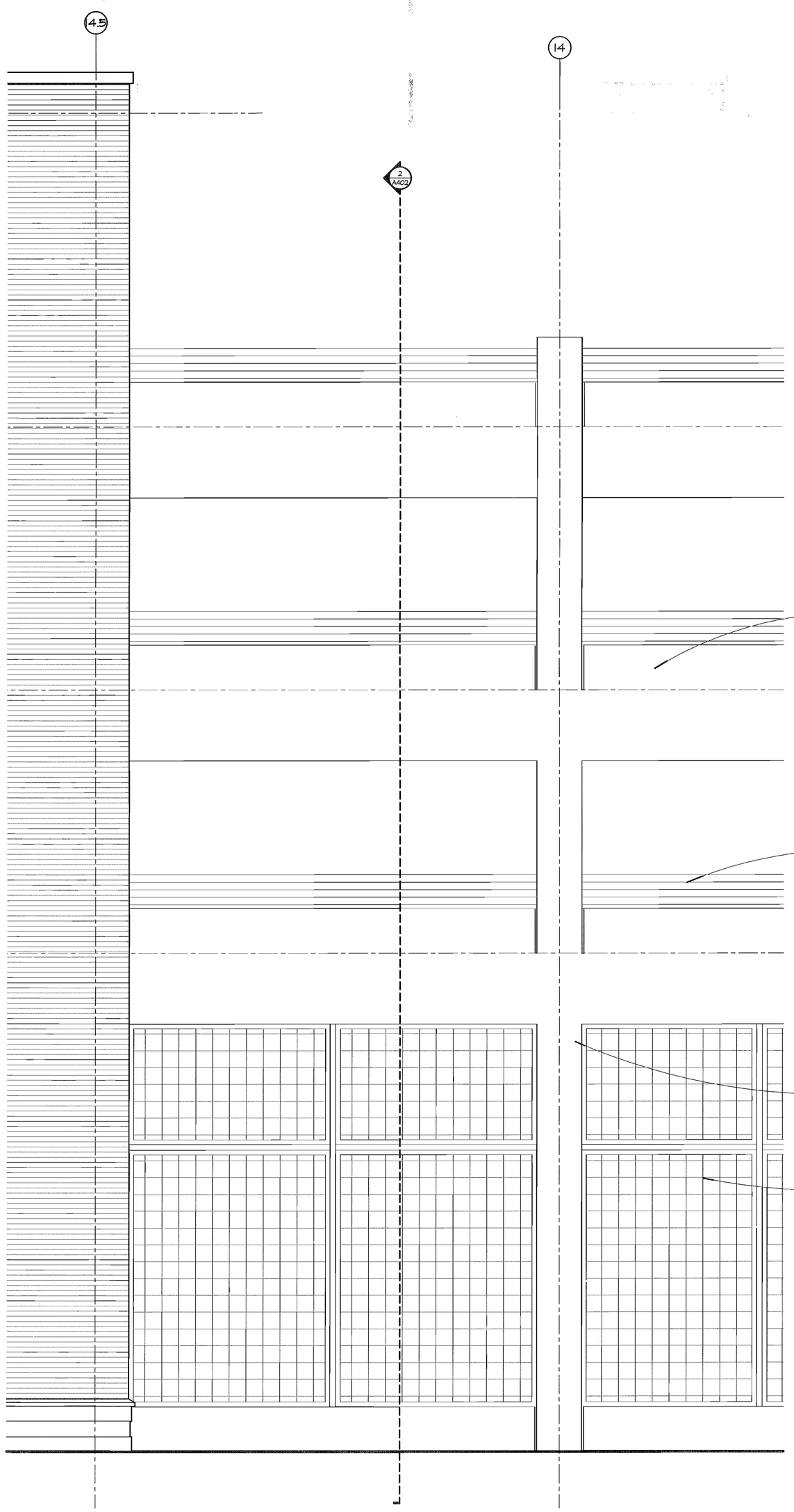

1 ENLARGED ELEVATION
SCALE: 3/8"=1'-0"
E-E017007

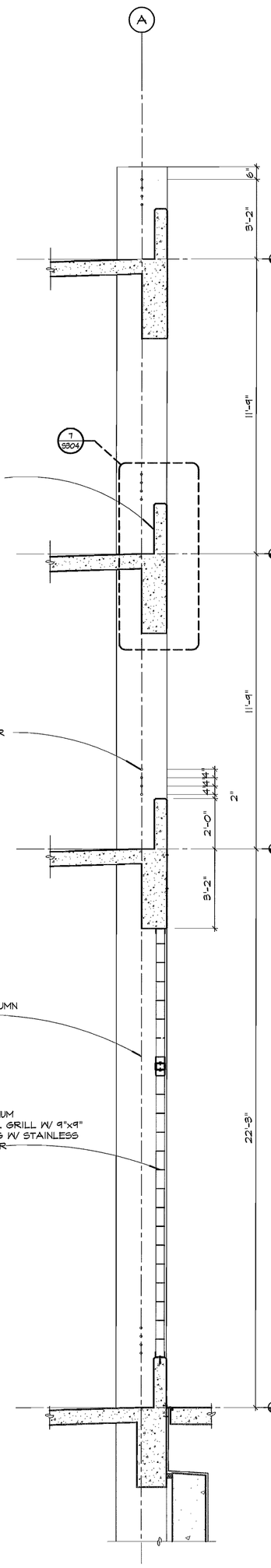

2 WALL SECTION
SCALE: 3/8"=1'-0"
E-WS017007

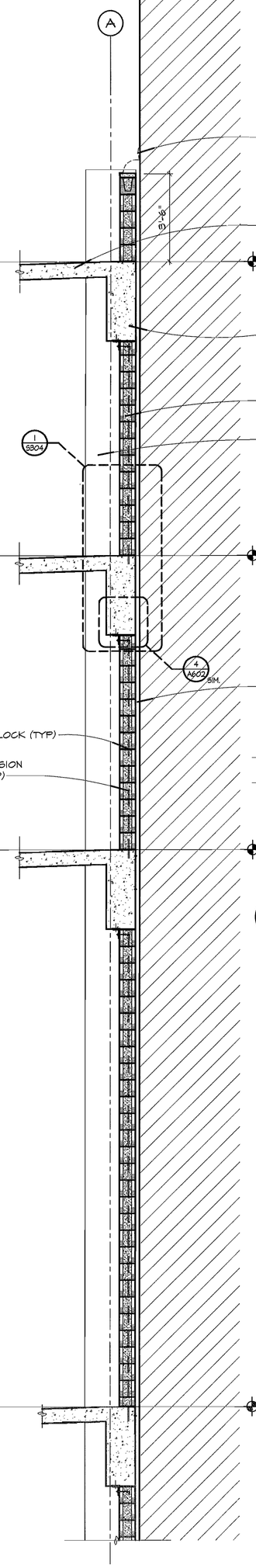

3 WALL SECTION @ LOW PARAPET
SCALE: 3/8"=1'-0"
E-WS017007

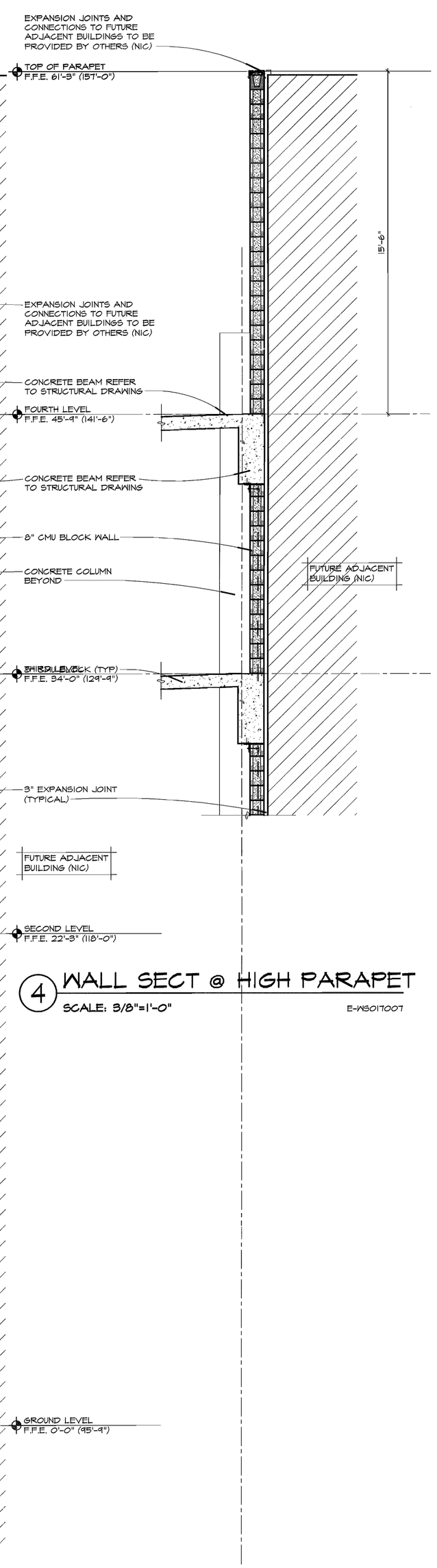

4 WALL SECT @ HIGH PARAPET
SCALE: 3/8"=1'-0"
E-WS017007

FINK ROBERTS & PETRIE, INC.
Consulting Engineers
4040 Vincennes Circle Suite 300
Indianapolis, Indiana 46268

Eddy Street Commons
Phase II
Parking Garage
Project Number 108-004

Owner
City of South Bend, Indiana

Construction Manager
Kite Realty Group
30 South Meridian Street, Suite 1100
Indianapolis, Indiana 46204
317-577-5600

Structural Engineer
Fink, Roberts & Petrie, Inc.
4040 Vincennes Circle, Suite 300
Indianapolis, Indiana 46268
317-872-8400

Architect
Looney Ricks Kiss
175 Toyota Plaza, Suite 600
Memphis, Tennessee 38103
901-521-1440

Mechanical, Electrical & Plumbing Enginee
Circle Design Group
5510 South East Street, Suite F
Indianapolis, Indiana 46227
317-781-6200

Parking Consultant
Walker Parking Consultants
6602 East 75th Street, Suite 210
Indianapolis, Indiana 46250
317-842-6890

Civil Engineer/Landscape Architect
The Troyer Group
550 Union Street
Mishawaka, Indiana 46554
574-259-9976

100% Construction Documents
January 23, 2008

REVISION DATE
REVISION DESCRIPTION

PAGE CAMERON CLOSE
REGISTERED
No. 10500056
STATE OF INDIANA
ARCHITECT
1-23-08

CERTIFIED BY

DESIGN DATE 01/23/08
DESIGN PROJECT NO. 07097
DESIGN DRAWN BY MV
CHECKED BY MV

SHEET TITLE
ENLARGED ELEVATIONS / WALL SECTIONS

SHEET NO.
A404

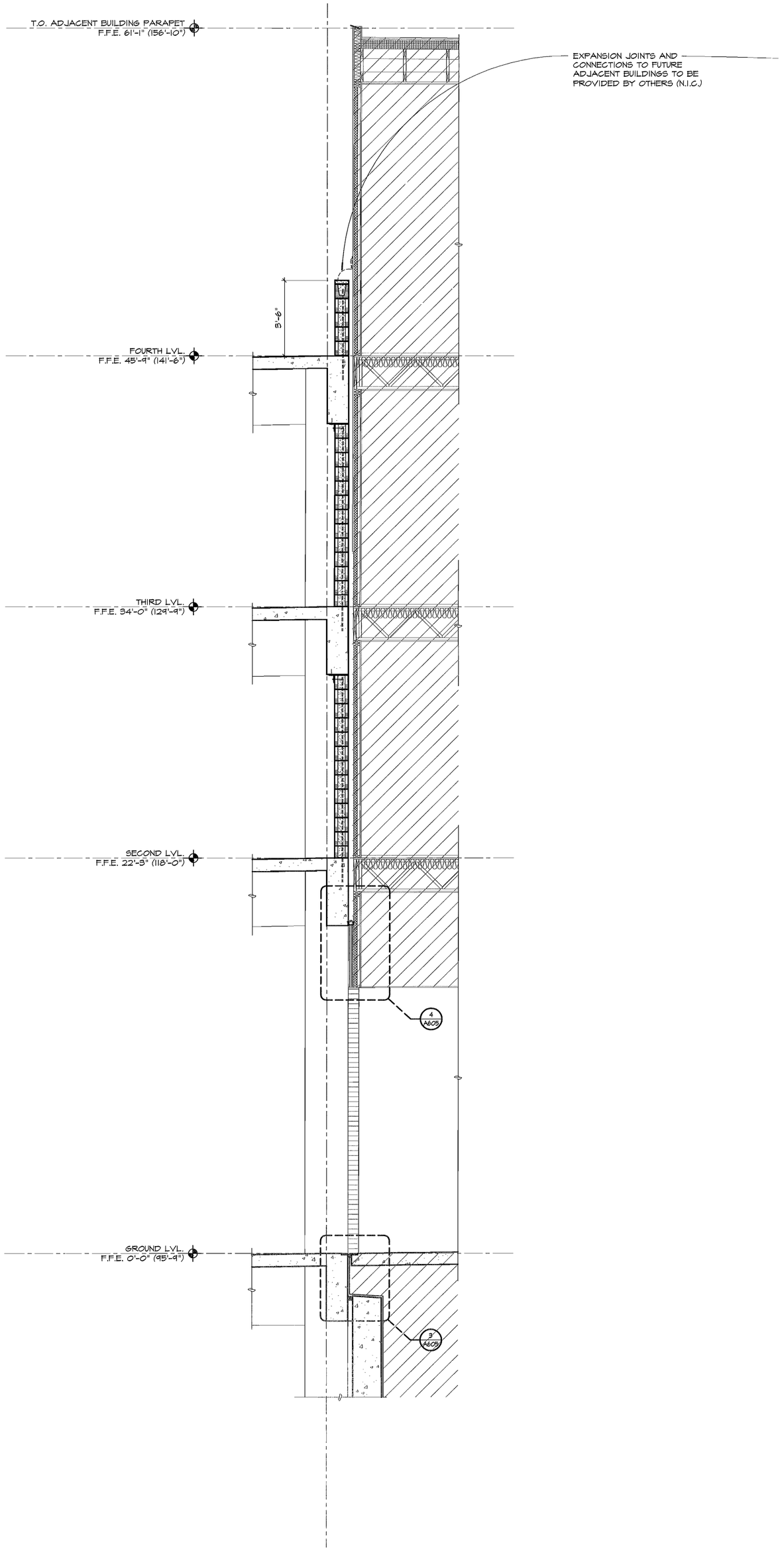

1 WALL SECTION @ SOUTH PASEO (BUILDING "D")

SCALE: 3/8"=1'-0"

E-WS017007

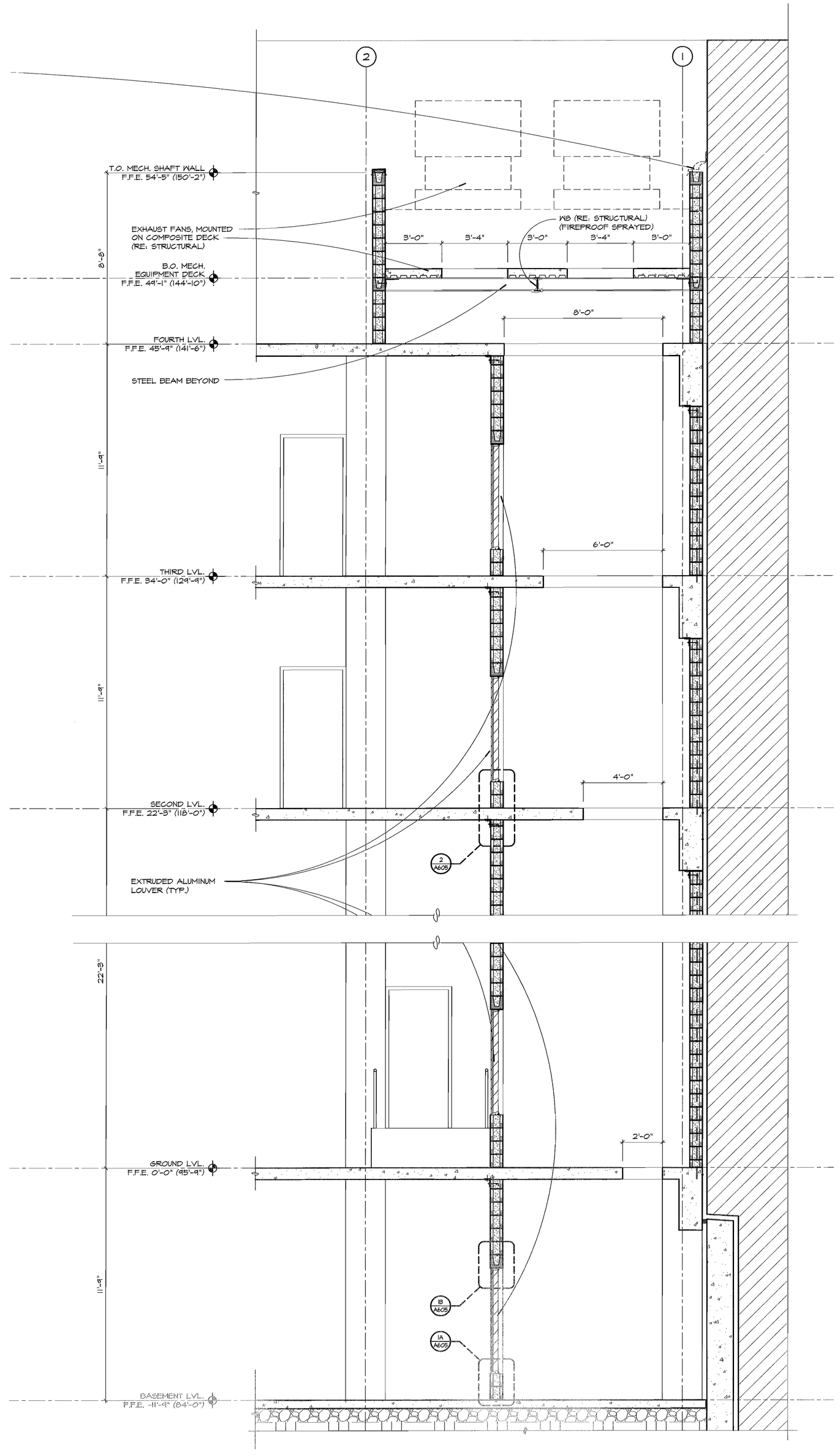

2 SECTION THROUGH MECHANICAL SHAFT

SCALE: 3/8"=1'-0"

E-WS017007

FINK ROBERTS & PETRIE, INC.
Consulting Engineers
4040 Vincennes Circle Suite 300
Indianapolis, Indiana 46268

Eddy Street Commons
Phase II
Parking Garage
Project Number 108-004

Owner
City of South Bend, Indiana

Construction Manager
Kite Realty Group
30 South Meridian Street, Suite 1100
Indianapolis, Indiana 46204
317-577-5600

Structural Engineer
Fink, Roberts & Petrie, Inc.
4040 Vincennes Circle, Suite 300
Indianapolis, Indiana 46268
317-872-8400

Architect
Looney Ricks Kiss
175 Toyota Plaza, Suite 600
Memphis, Tennessee 38103
901-521-1440

Mechanical, Electrical & Plumbing Engineer
Circle Design Group
5510 South East Street, Suite F
Indianapolis, Indiana 46227
317-781-6200

Parking Consultant
Walker Parking Consultants
6602 East 75th Street, Suite 210
Indianapolis, Indiana 46250
317-842-6890

Civil Engineer/Landscape Architect
The Troyer Group
550 Union Street
Mishawaka, Indiana 46554
574-259-9976

100% Construction Documents
January 23, 2008

PAUL CAMERON CLOSE
REGISTERED
No. 10500056
STATE OF INDIANA
ARCHITECT
1-23-08

DESIGN DATE	01/23/08
DESIGN PROJECT NO.	07097
DESIGN DRAWN BY	MV
CHECKED BY	MV

PASEO / MECH. SHAFT SECTIONS

A405

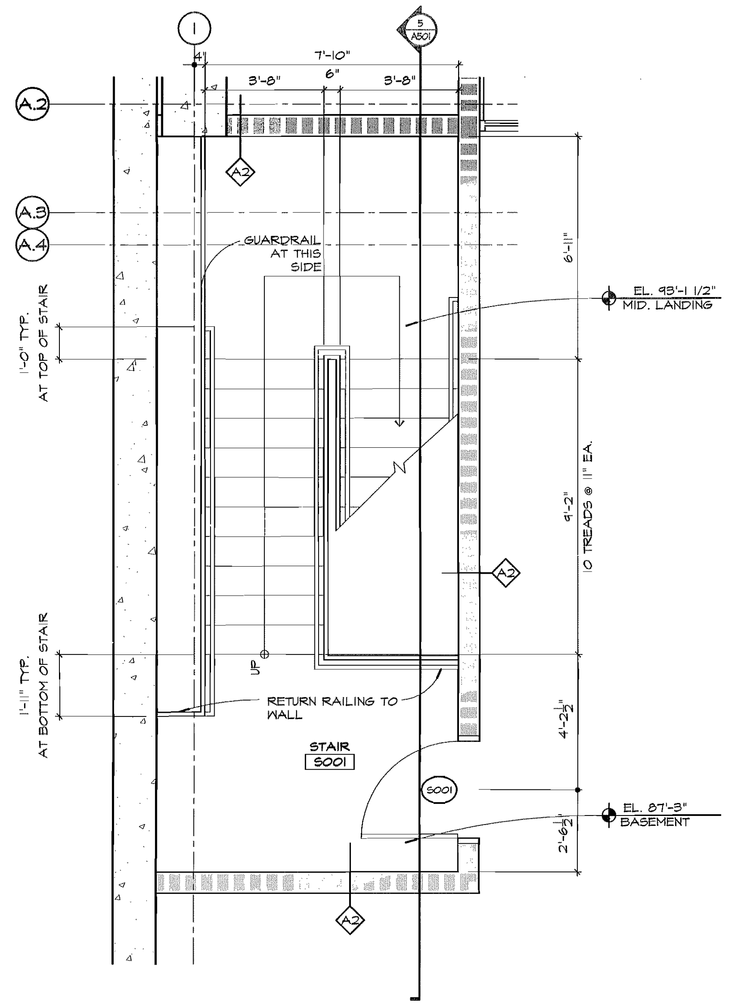

1 BASEMENT LEVEL PLAN STAIR #1

SCALE : 3/8" = 1'-0"

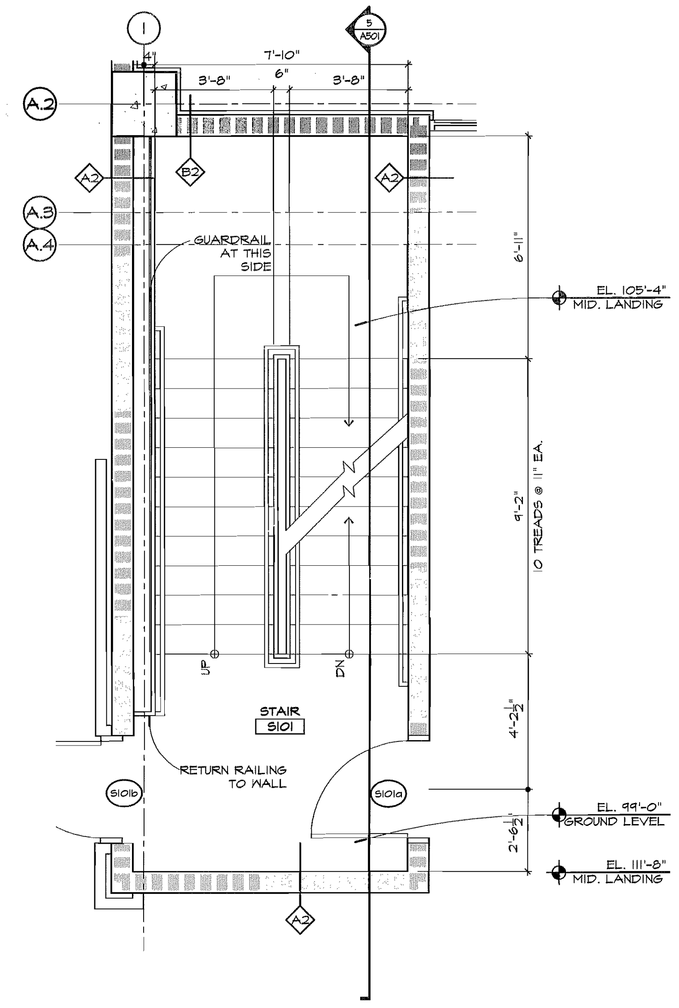

2 FIRST LEVEL PLAN STAIR #1

SCALE : 3/8" = 1'-0"

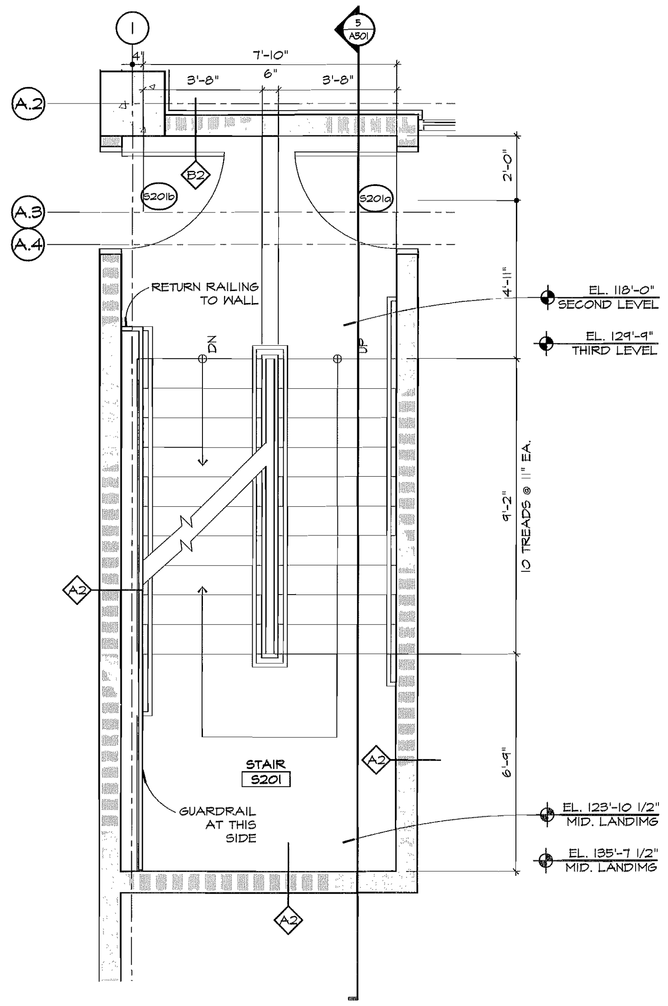

3 SECOND LEVEL PLAN STAIR #1

SCALE : 3/8" = 1'-0"

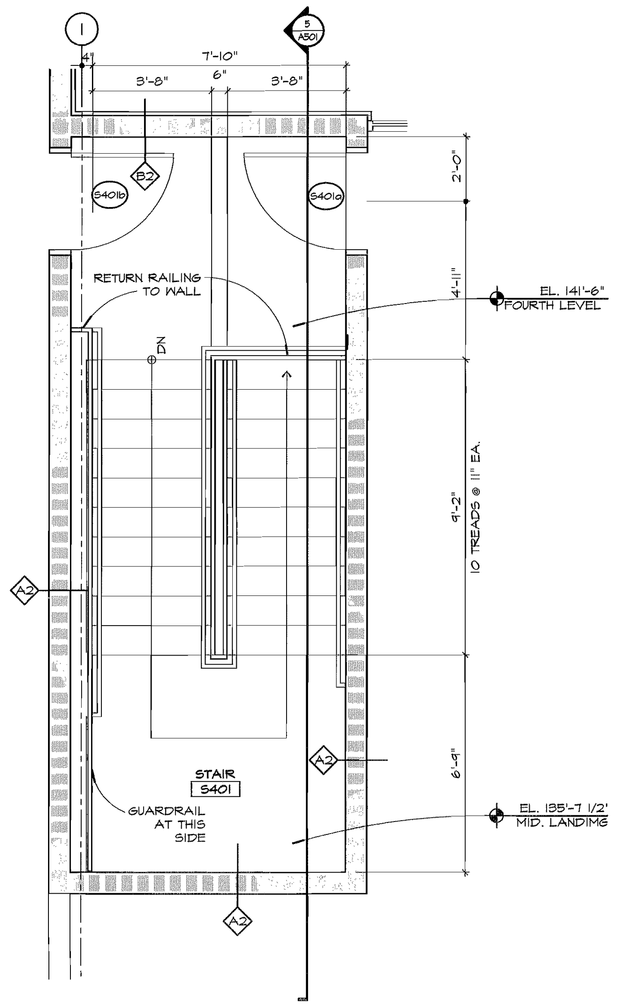

4 FOURTH LEVEL PLAN STAIR #1

SCALE : 3/8" = 1'-0"

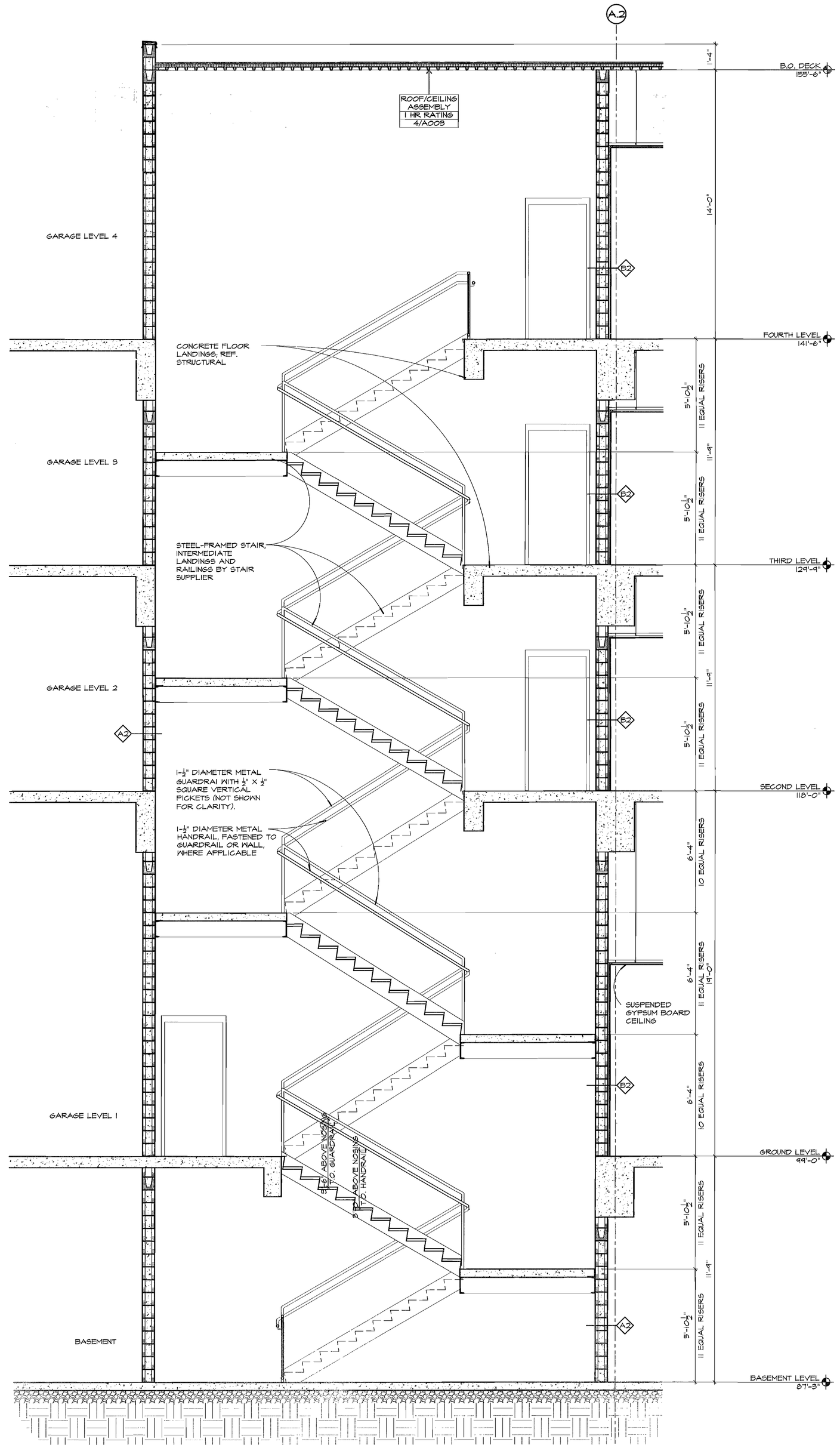

5 LONGITUDINAL SECTION AT STAIR #1

SCALE : 3/8" = 1'-0"

FINK ROBERTS & PETRIE INC
Consulting Engineers
4040 Vincennes Circle Suite 300
Indianapolis, Indiana 46268

Eddy Street Commons
Phase II
Parking Garage
Project Number 108-004

Owner
City of South Bend, Indiana

Construction Manager
Kite Realty Group
30 South Meridian Street, Suite 1100
Indianapolis, Indiana 46204
317-577-5600

Structural Engineer
Fink, Roberts & Petrie, Inc.
4040 Vincennes Circle, Suite 300
Indianapolis, Indiana 46268
317-872-8400

Architect
Looney Ricks Kiss
175 Toyota Plaza, Suite 600
Memphis, Tennessee 38103
901-521-1440

Mechanical, Electrical & Plumbing Engineer
Circle Design Group
5510 South East Street, Suite F
Indianapolis, Indiana 46227
317-781-6200

Parking Consultant
Walker Parking Consultants
6602 East 75th Street, Suite 210
Indianapolis, Indiana 46250
317-842-6890

Civil Engineer/Landscape Architect
The Troyer Group
550 Union Street
Mishawaka, Indiana 46554
574-259-9976

100% Construction Documents
January 23, 2008

REVISION DATE	REVISION DESCRIPTION

CERTIFIED BY
CAMERON CRUSE
REGISTERED
No. 10500056
STATE OF INDIANA
PROFESSIONAL ENGINEER
1-23-08

ISSUE DATE	ISSUE PROJECT NO.	ISSUE BY	DRAWN BY	CHECKED BY
01/23/08	0709X	DPH	JH	JH

SHEET TITLE
STAIR #1 PLANS AND SECTIONS

SHEET NO.
A501

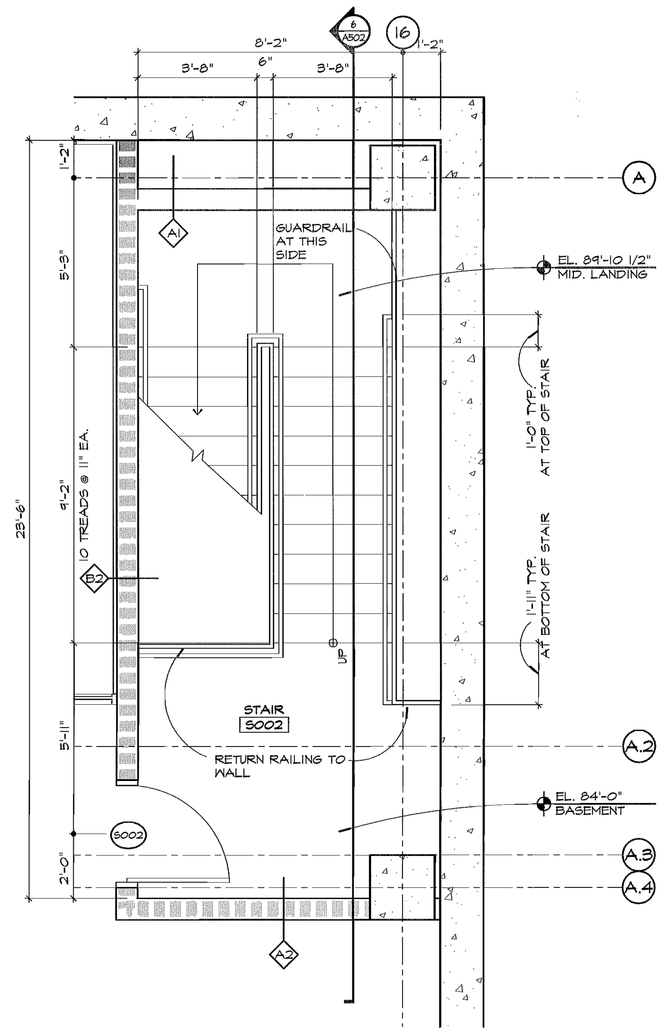

1 BASEMENT LEVEL PLAN STAIR #2

SCALE : 3/8" = 1'-0"

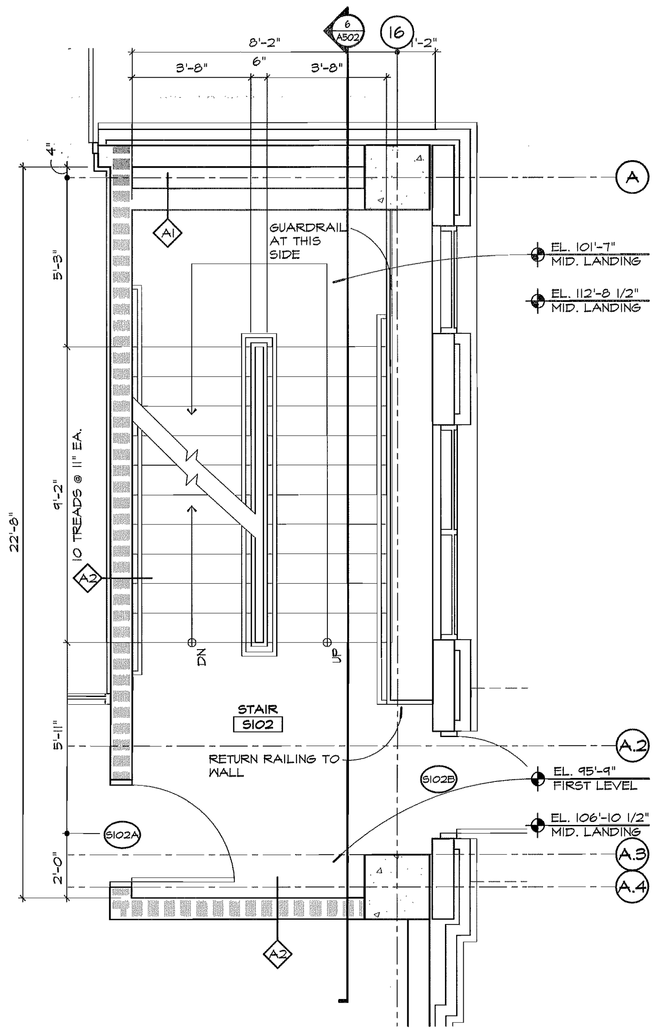

2 FIRST LEVEL PLAN STAIR #2

SCALE : 3/8" = 1'-0"

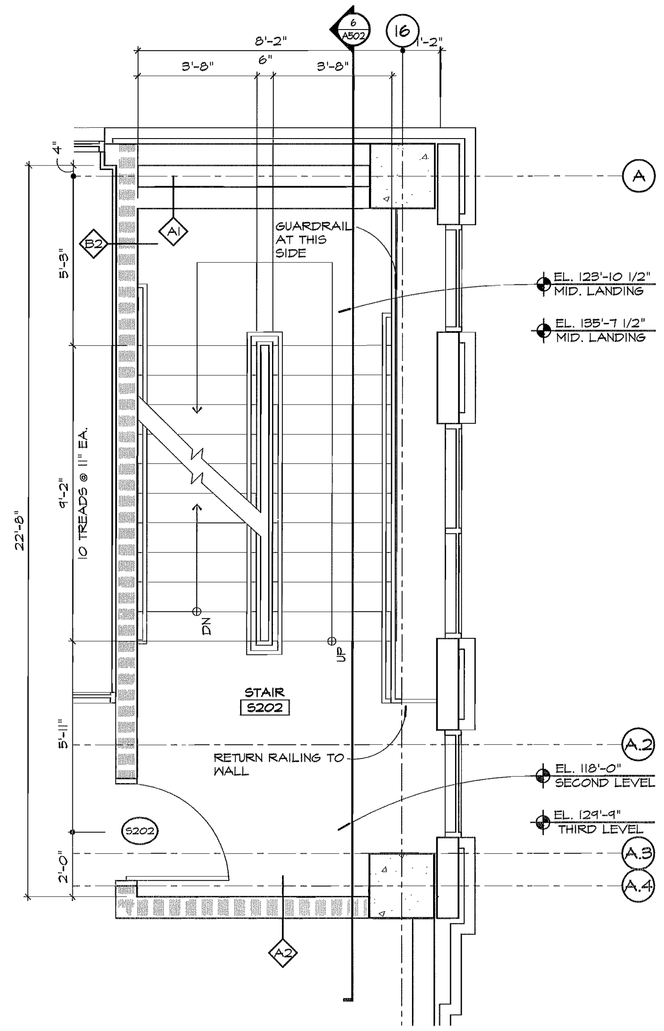

3 SECOND LEVEL PLAN STAIR #2

SCALE : 3/8" = 1'-0"

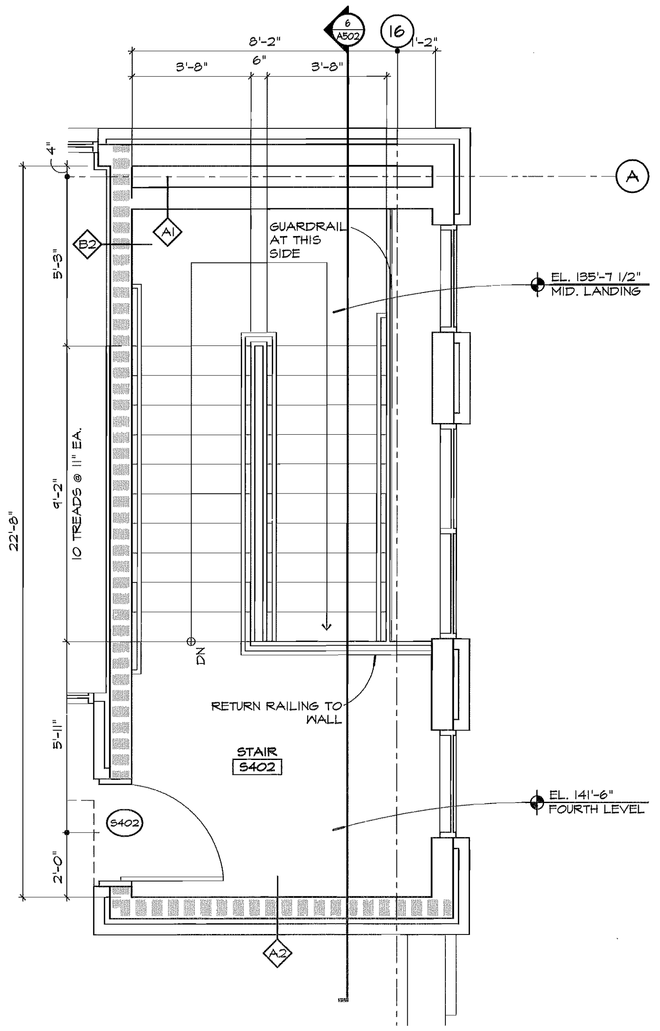

4 FOURTH LEVEL PLAN STAIR #2

SCALE : 3/8" = 1'-0"

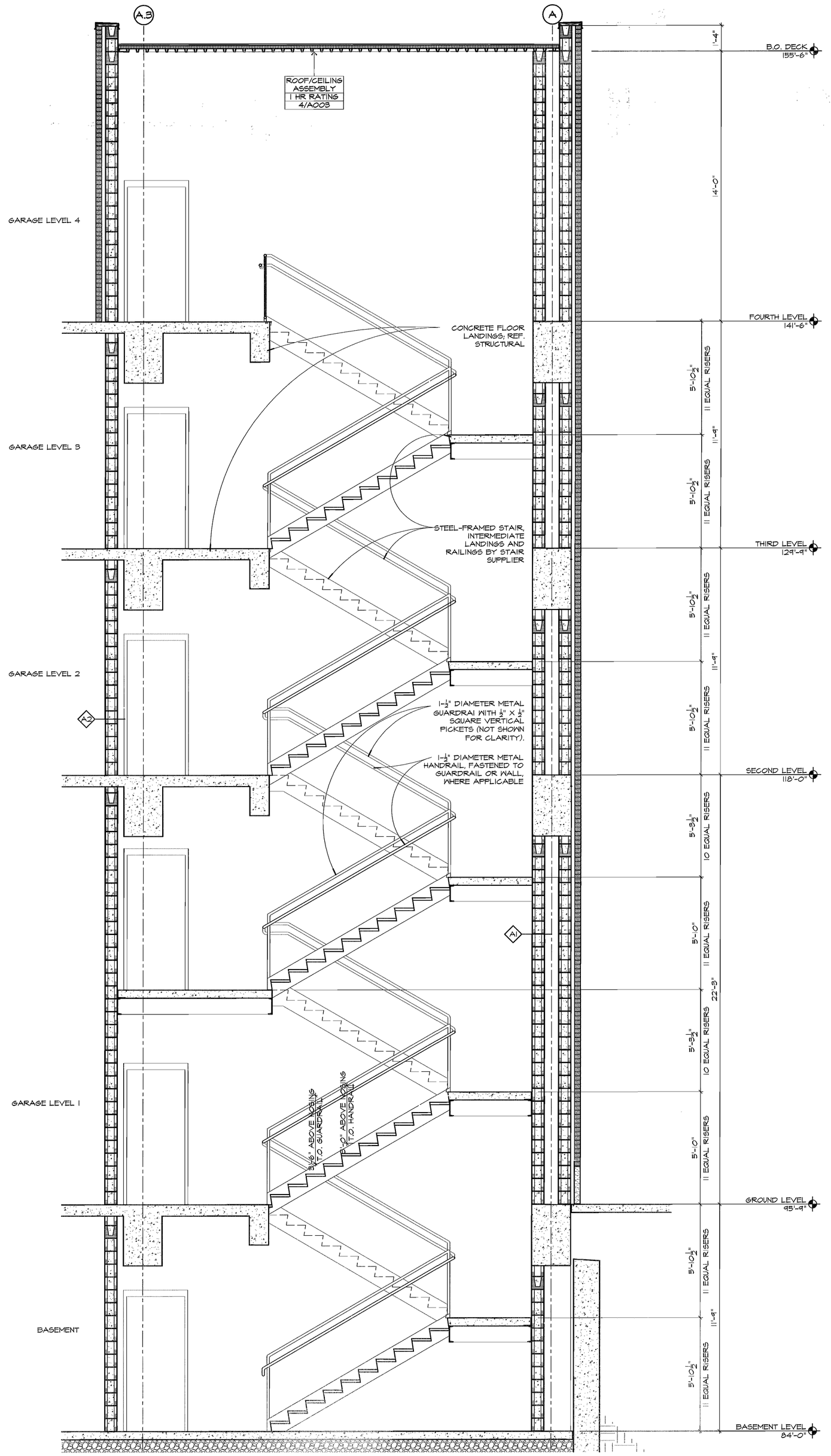

5 LONGITUDINAL SECTION AT STAIR #2

SCALE : 3/8" = 1'-0"

FINK ROBERTS & PETRIE INC.
Consulting Engineers
4040 Vincennes Circle, Suite 300
Indianapolis, Indiana 46268

Eddy Street Commons
Phase II
Parking Garage
Project Number 108-004

Owner
City of South Bend, Indiana

Construction Manager
Kite Realty Group
30 South Meridian Street, Suite 1100
Indianapolis, Indiana 46204
317-577-5600

Structural Engineer
Fink, Roberts & Petrie, Inc.
4040 Vincennes Circle, Suite 300
Indianapolis, Indiana 46268
317-872-8400

Architect
Looney Ricks Kiss
175 Toyota Plaza, Suite 600
Memphis, Tennessee 38103
901-521-1440

Mechanical, Electrical & Plumbing Engineer
Circle Design Group
5510 South East Street, Suite F
Indianapolis, Indiana 46227
317-781-0200

Parking Consultant
Walker Parking Consultants
6602 East 75th Street, Suite 310
Indianapolis, Indiana 46250
317-842-6890

Civil Engineer/Landscape Architect
The Troyer Group
550 Union Street
Mishawaka, Indiana 46554
574-259-0976

100% Construction Documents
January 23, 2008

REVISION DATE | REVISION DESCRIPTION

CERTIFIED BY
CAMERON CLOSE
REGISTERED
No. 10500050
STATE OF
INDIANA
PROFESSIONAL ENGINEER
1-23-08

DESIGN DATE	DESIGN PHASE NO.	DESIGN DRAWN BY	CHECKED BY
01/23/08	07097	JPH	JPH

SHEET TITLE
STAIR #2 PLANS AND SECTIONS

SHEET NO.
A502

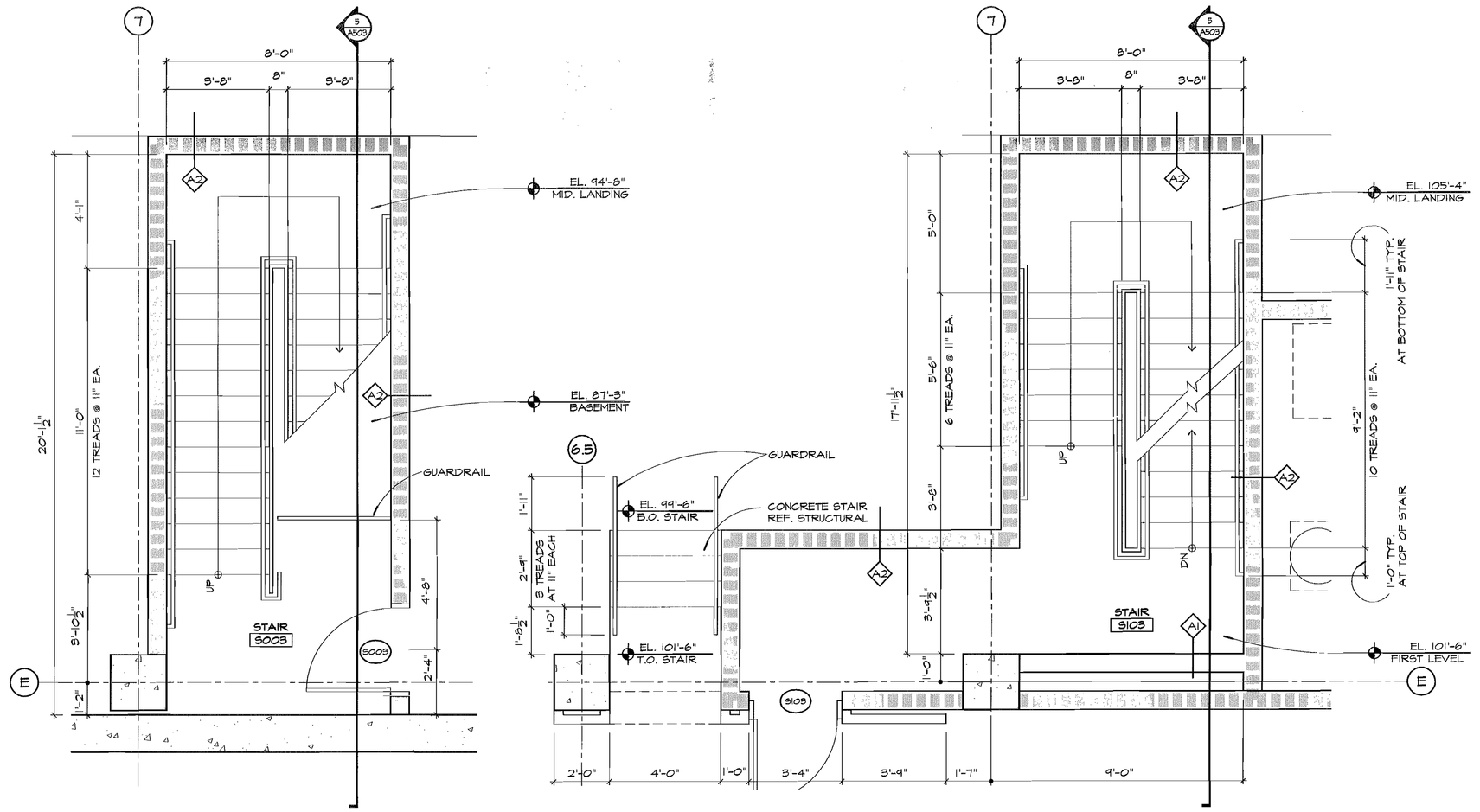

1 BASEMENT LEVEL PLAN STAIR #3

SCALE : 3/8" = 1'-0"

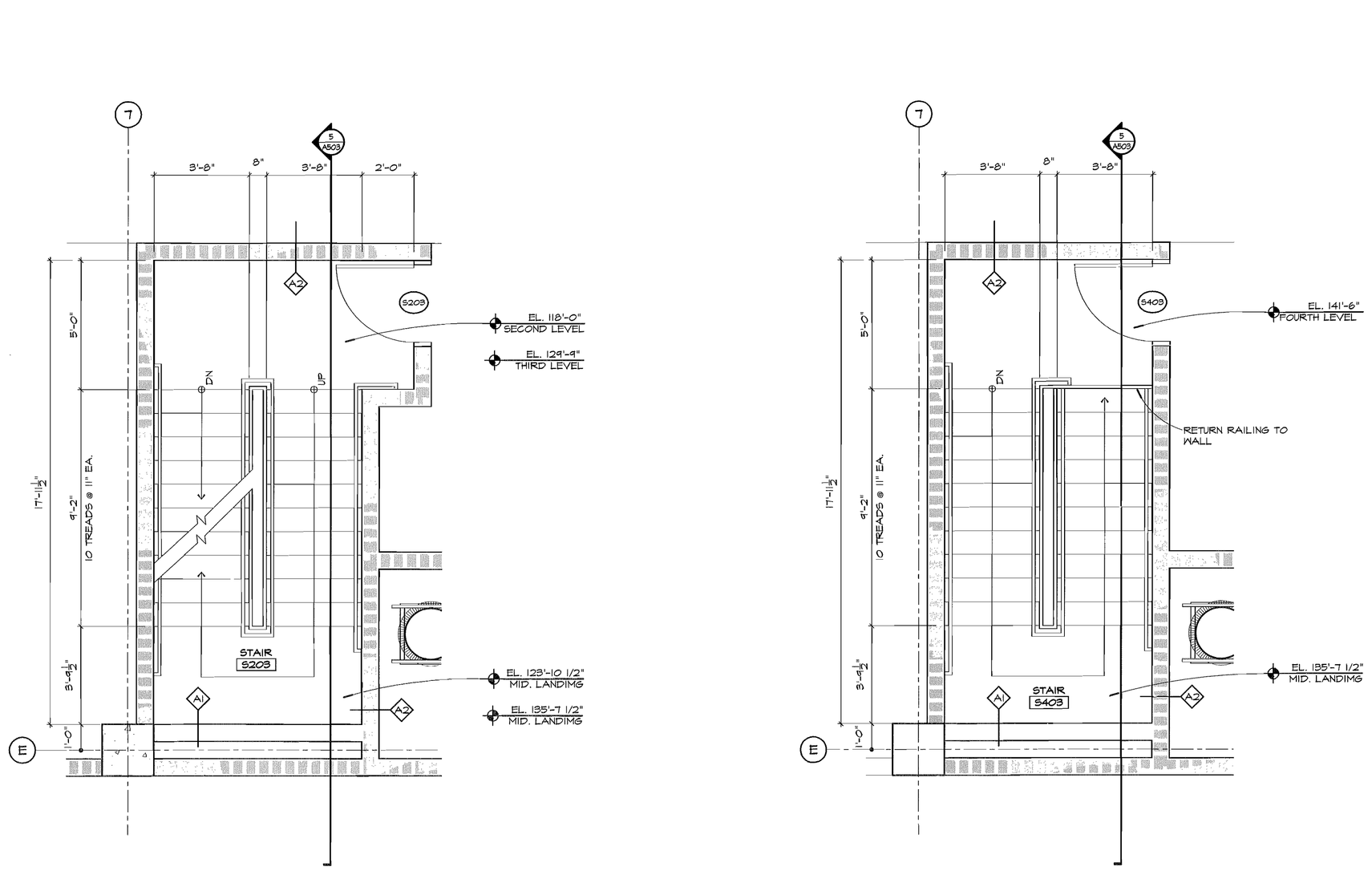

3 SECOND LEVEL PLAN STAIR #3

SCALE : 3/8" = 1'-0"

4 FOURTH LEVEL PLAN STAIR #3

SCALE : 3/8" = 1'-0"

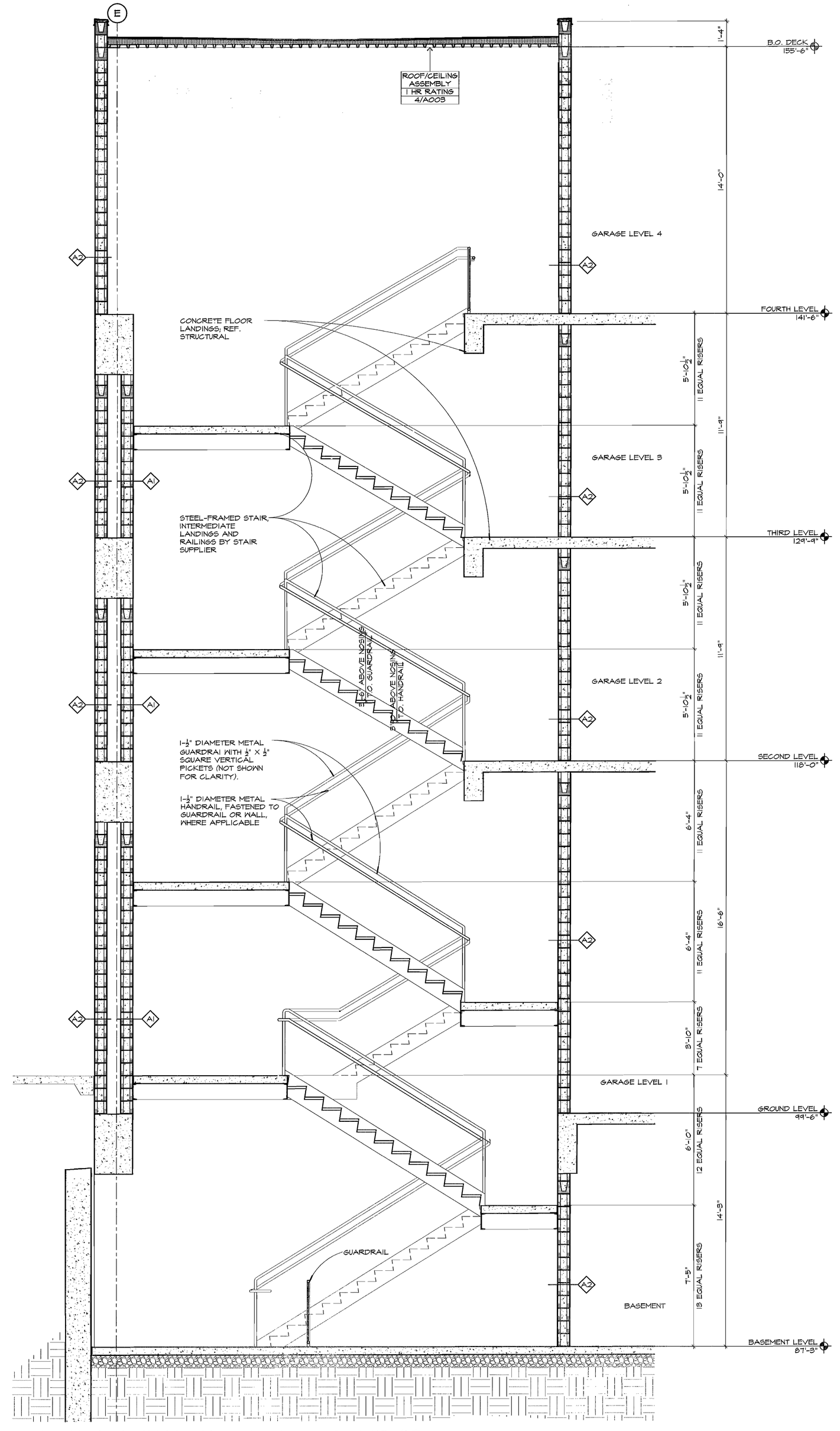

5 LONGITUDINAL SECTION AT STAIR #3

SCALE : 3/8" = 1'-0"

FINK ROBERTS & PETRIE INC.
Engineers and Consulting Scientists
4940 Viscount Circle, Suite 300
Indianapolis, Indiana 46268

Eddy Street Commons Phase II Parking Garage

Project Number 108-004

Owner
City of South Bend, Indiana

Construction Manager
Kite Realty Group
30 South Meridian Street, Suite 1100
Indianapolis, Indiana 46204
317-577-5600

Structural Engineer
Fink, Roberts & Petrie, Inc.
4940 Viscount Circle, Suite 300
Indianapolis, Indiana 46268
317-872-8400

Architect
Looney Ricks Kiss
175 Toyota Plaza, Suite 600
Memphis, Tennessee 38103
901-521-1440

Mechanical, Electrical & Plumbing Engineer
Circle Design Group
5510 South East Street, Suite F
Indianapolis, Indiana 46227
317-781-6200

Parking Consultant
Walker Parking Consultants
6002 East 75th Street, Suite 210
Indianapolis, Indiana 46250
317-842-6890

Civil Engineer/Landscape Architect
The Troyer Group
550 Union Street
Minhowaka, Indiana 46554
574-259-9976

100% Construction Documents
January 23, 2008

REVISION DATE | REVISION DESCRIPTION

CERTIFIED BY
PAUL CAMERON FOSS
REGISTERED
No. 10500056
STATE OF
INDIANA
1-23-08

DESIGN DATE: 01/23/08
DESIGN PROJECT NO: 07097
DESIGN DRAWN BY: JPH
DESIGN CHECKED BY: PCH

SHEET TITLE
STAIR #3 PLANS AND SECTIONS

SHEET NO.
A503

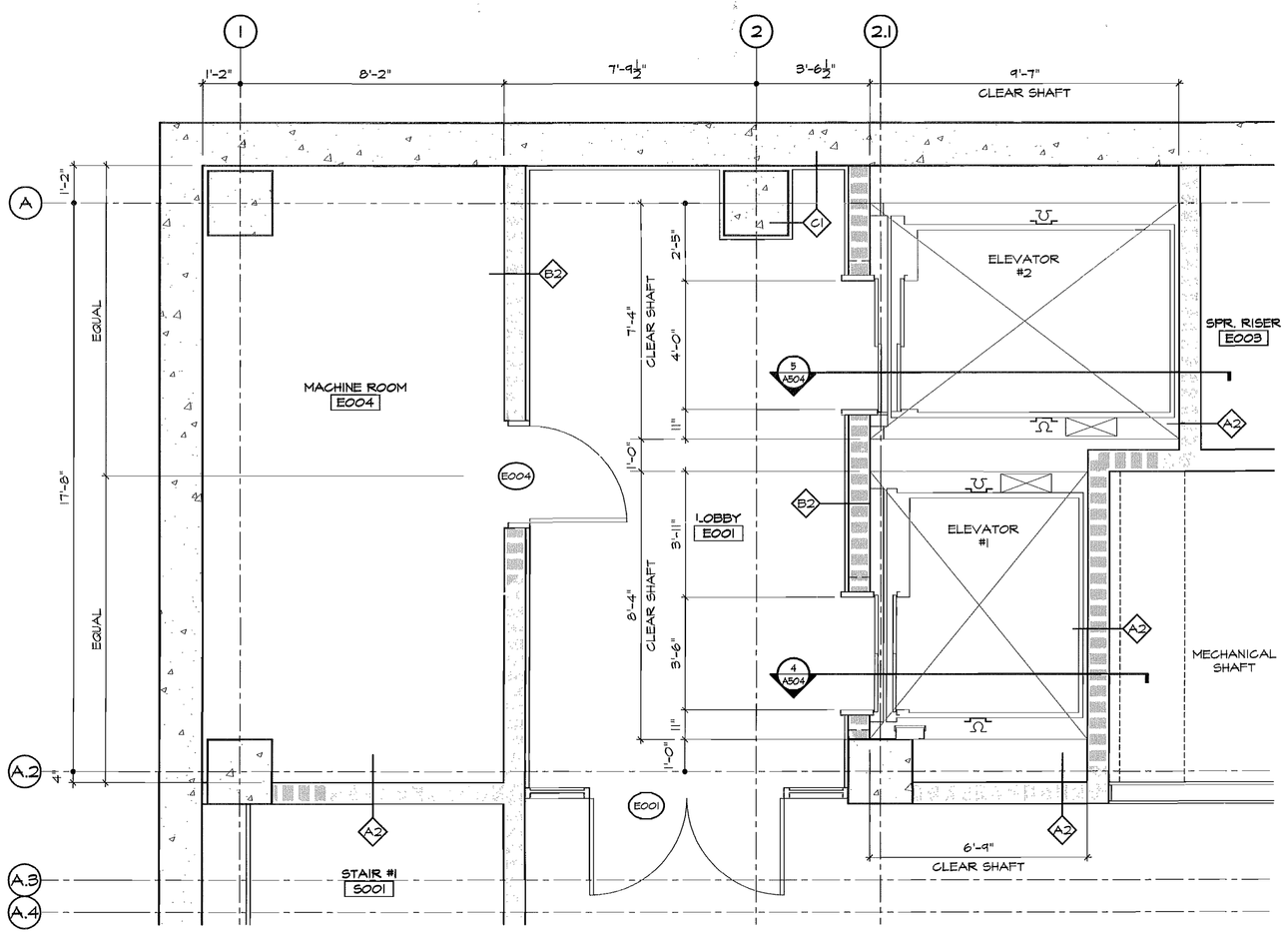

1 BASEMENT PLAN

SCALE : 3/8" = 1'-0"

ELEVATORS

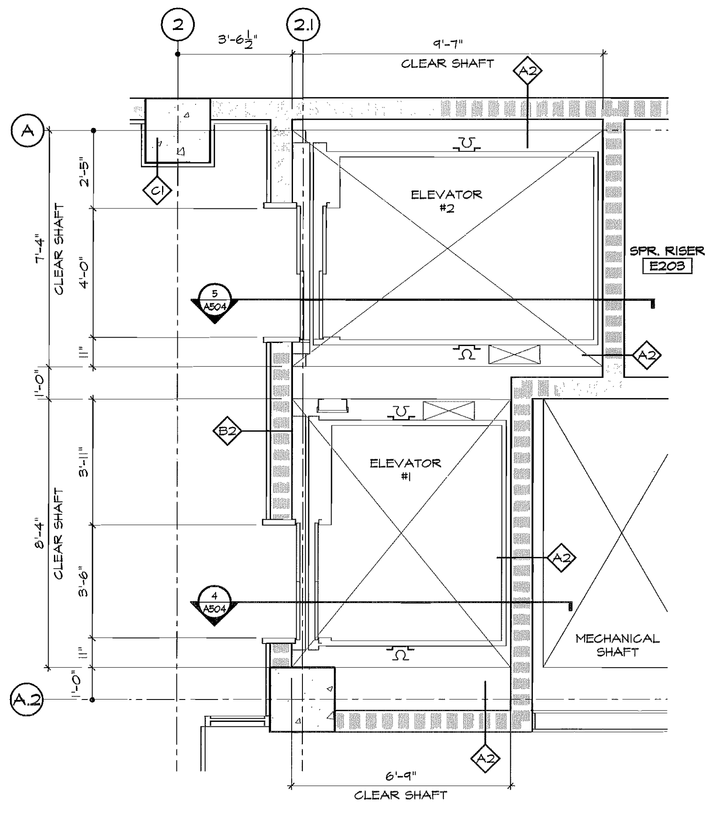

2 TYPICAL PLAN

SCALE : 3/8" = 1'-0"

ELEVATORS

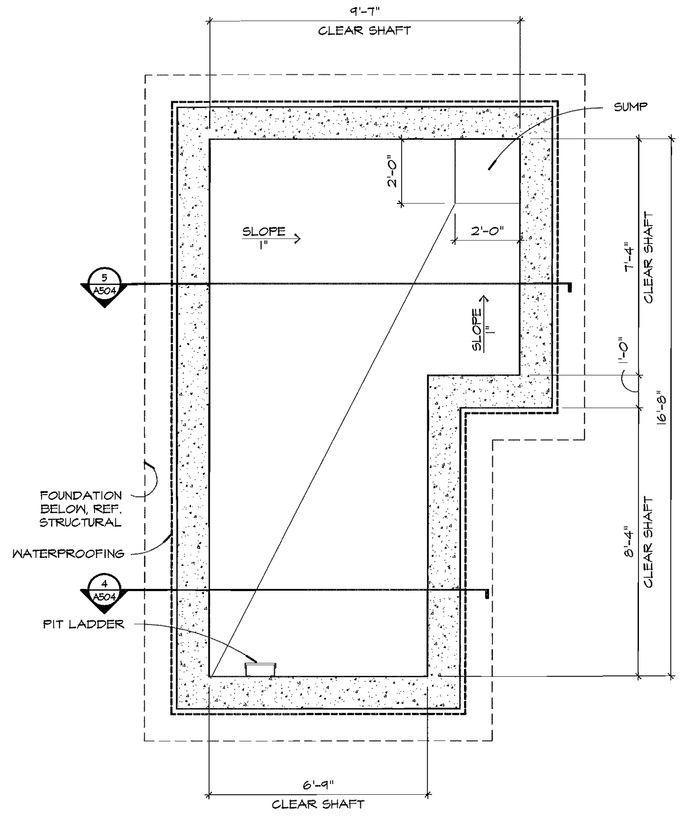

3 PIT PLAN

SCALE : 3/8" = 1'-0"

ELEVATORS

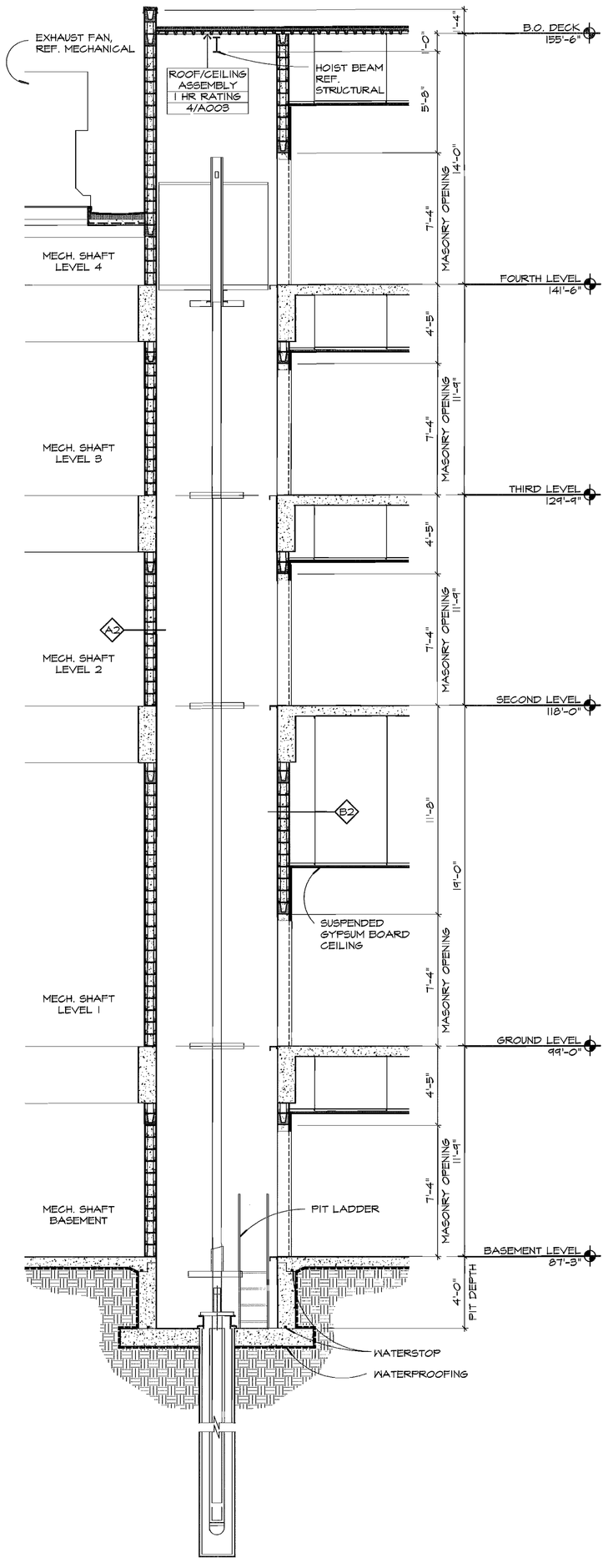

4 ELEVATOR SECTION

SCALE : 1/4" = 1'-0"

ELEVATORS

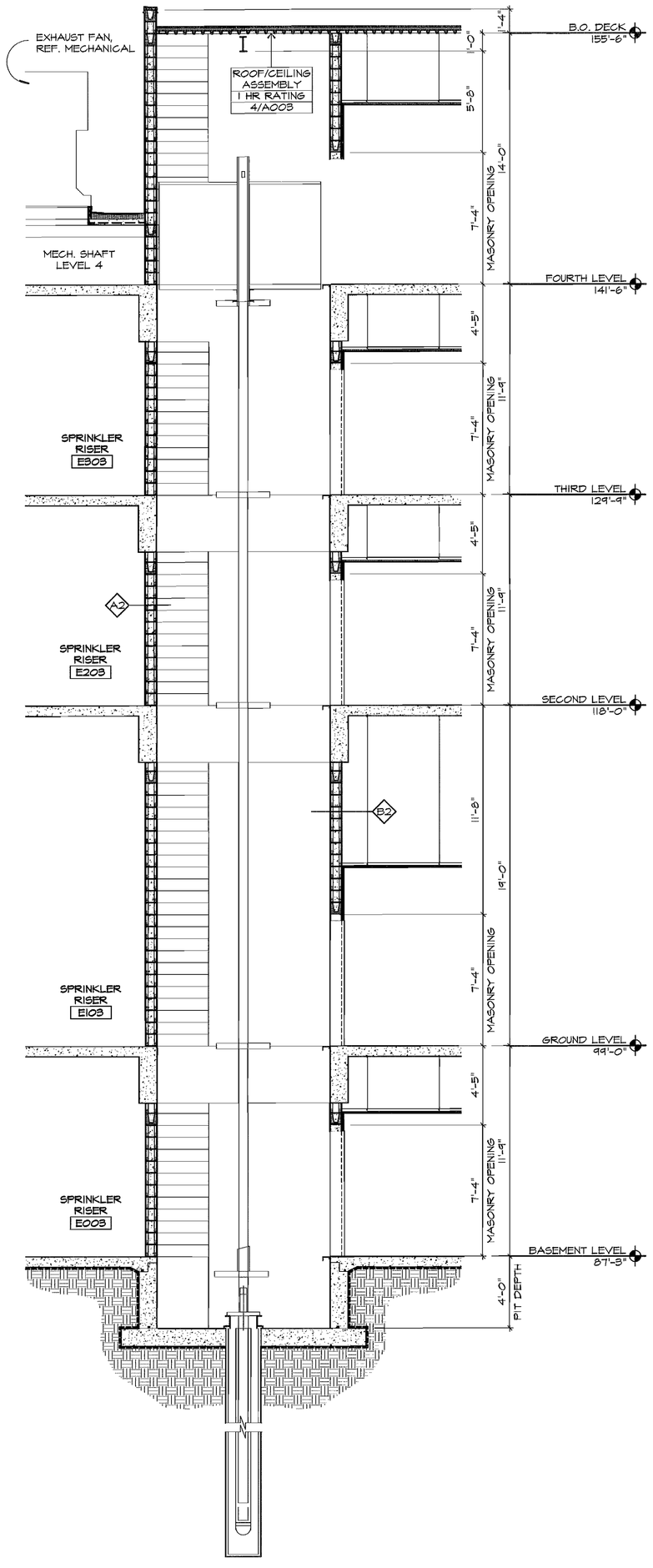

5 ELEVATOR SECTION

SCALE : 1/4" = 1'-0"

ELEVATORS

FINK ROBERTS & PETRIE INC.
Consulting Engineers
4040 Vincennes Circle, Suite 300
Indianapolis, Indiana 46268

Eddy Street Commons
Phase II
Parking Garage
Project Number 108-004

Owner
City of South Bend, Indiana

Construction Manager
Kite Realty Group
30 South Meridian Street, Suite 1100
Indianapolis, Indiana 46204
317-577-5600

Structural Engineer
Fink, Roberts & Petrie, Inc.
4040 Vincennes Circle, Suite 300
Indianapolis, Indiana 46268
317-872-8400

Architect
Looney Ricks Kiss
175 Toyota Plaza, Suite 600
Memphis, Tennessee 38103
901-521-1440

Mechanical, Electrical & Plumbing Engineer
Circle Design Group
3510 South East Street, Suite F
Indianapolis, Indiana 46227
317-781-6200

Parking Consultant
Walker Parking Consultants
6602 East 75th Street, Suite 210
Indianapolis, Indiana 46250
317-842-6800

Civil Engineer/Landscape Architect
The Troyer Group
450 Union Street
Mishawaka, Indiana 46554
574-259-9976

100% Construction
Documents
January 23, 2008

REVISION DATE | REVISION DESCRIPTION

CERTIFIED BY
CAMERON C. COLE
REGISTERED
No. 10500056
STATE OF
INDIANA
1-23-08

ISSUE DATE	DESIGN PROJECT NO.	DESIGN DRAWN BY	DESIGN CHK BY
01/23/08	07097	JPH	JPH

SHEET TITLE
ELEVATOR PLANS AND SECTIONS

SHEET NO.
A504

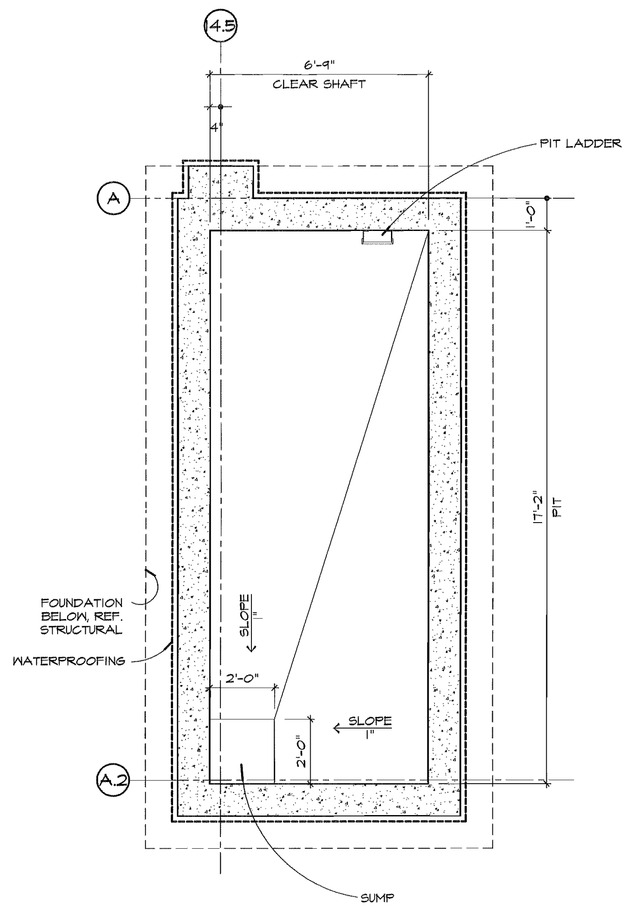

1 PIT PLAN
SCALE : 3/8" = 1'-0"
ELEVATORS

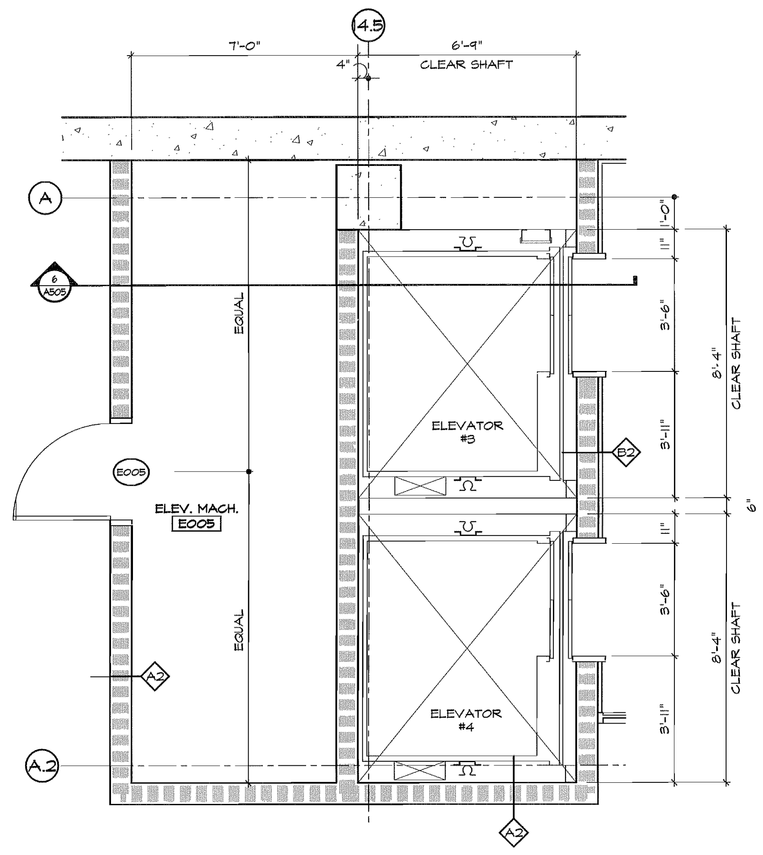

2 BASEMENT PLAN
SCALE : 3/8" = 1'-0"
ELEVATORS

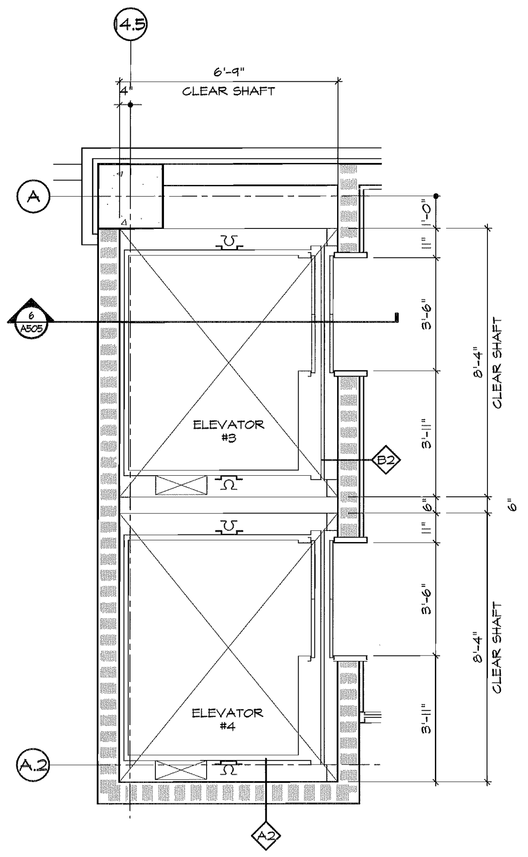

3 TYPICAL PLAN
SCALE : 3/8" = 1'-0"
ELEVATORS

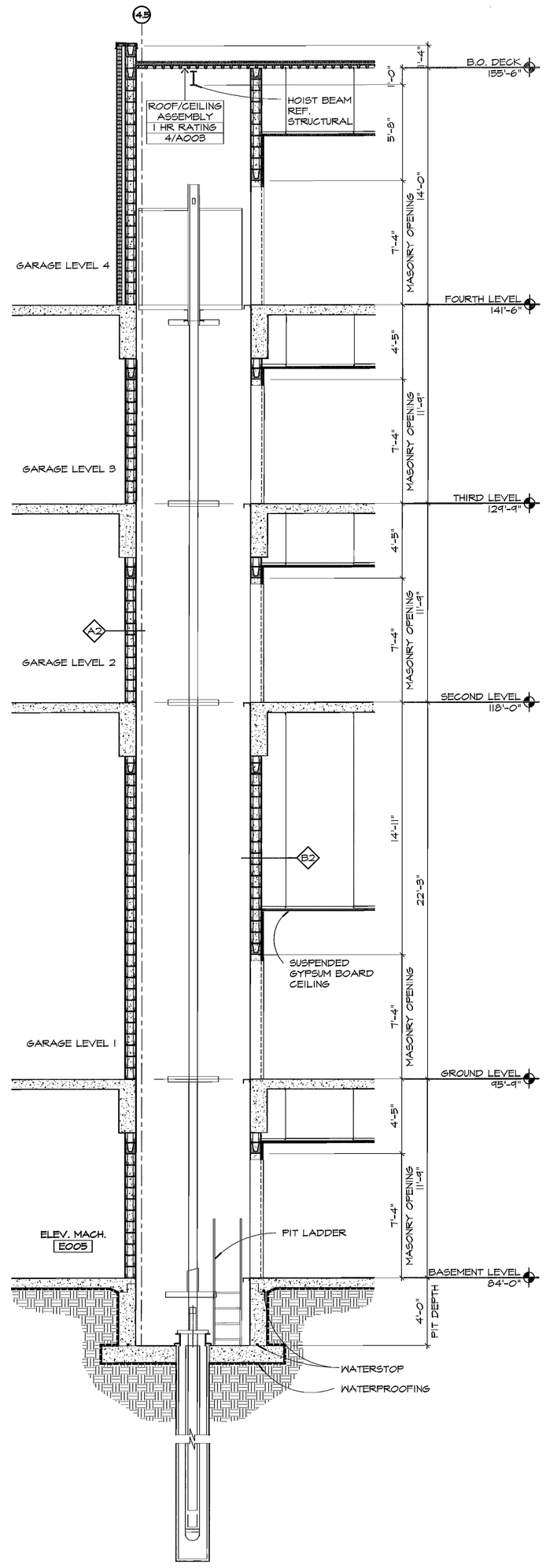

6 ELEVATOR SECTION
SCALE : 1/4" = 1'-0"
ELEVATORS

FINK ROBERTS & PETRIE, INC.
Consulting Engineers
4040 Vincennes Circle Suite 300
Indianapolis, Indiana 46268

Eddy Street Commons
Phase II
Parking Garage
Project Number 108-004

Owner
City of South Bend, Indiana

Construction Manager
Kite Realty Group
30 South Meridian Street, Suite 1100
Indianapolis, Indiana 46204
317-577-5600

Structural Engineer
Fink, Roberts & Petrie, Inc.
4040 Vincennes Circle, Suite 300
Indianapolis, Indiana 46268
317-872-8400

Architect
Looney Ricks Kiss
175 Toyota Plaza, Suite 600
Memphis, Tennessee 38103
901-521-1440

Mechanical, Electrical & Plumbing Engineer
Circle Design Group
5510 South East Street, Suite F
Indianapolis, Indiana 46227
317-781-6200

Parking Consultant
Walker Parking Consultants
6602 East 75th Street, Suite 210
Indianapolis, Indiana 46250
317-842-6890

Civil Engineer/Landscape Architect
The Troyer Group
550 Union Street
Mishawaka, Indiana 46554
574-259-9976

100% Construction Documents
January 23, 2008

REVISION DATE | REVISION DESCRIPTION

CERTIFIED BY
PAUL CAMERON CLOSE
REGISTERED
No. 10500056
STATE OF INDIANA
ARCHITECT
1-23-08

DESIGN DATE 01/23/08
DESIGN PROJECT NO. 07097
DESIGN DRAWN BY JPH
CHECKED BY JPH

SHEET TITLE
ELEVATOR PLANS AND SECTIONS

SHEET NO.
A505

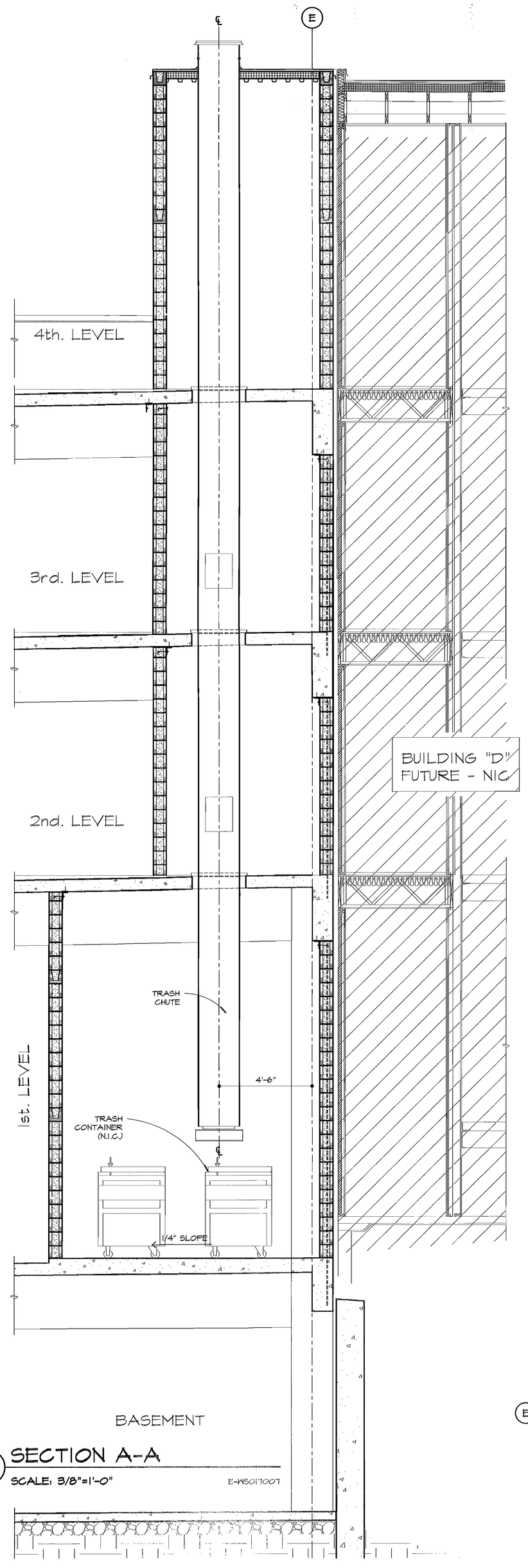

1 SECTION A-A

SCALE: 3/8"=1'-0" E-A501TOOT

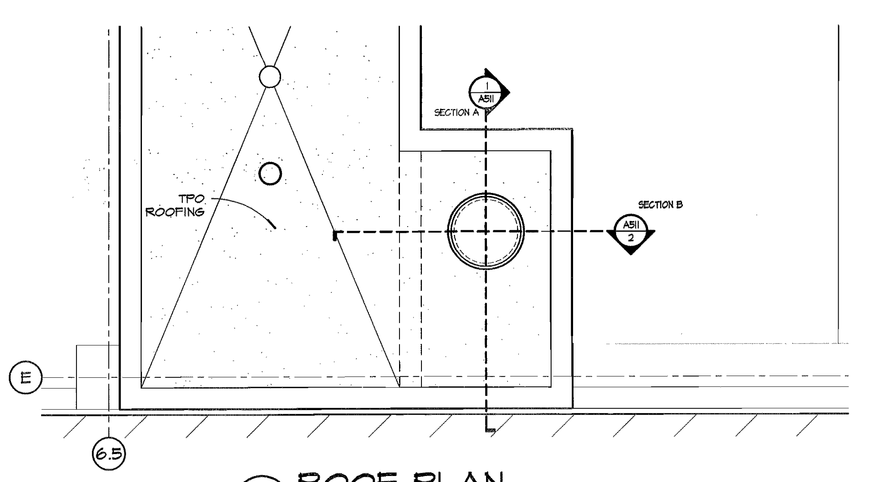

5 ROOF PLAN

SCALE: 3/8"=1'-0" E-B01TOOT

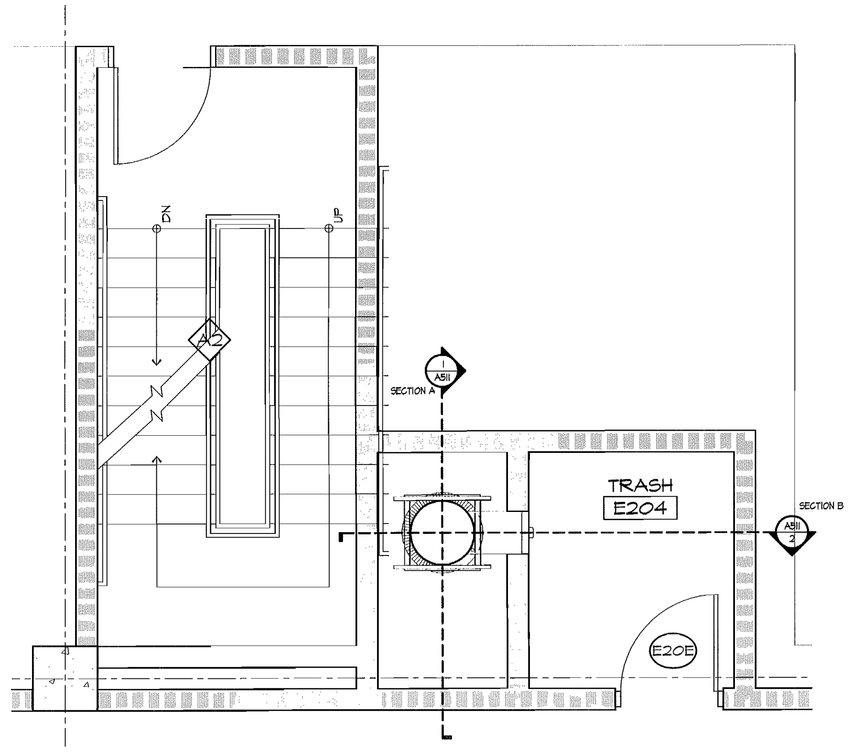

4 2nd & 3rD FLOOR LEVEL PLAN

SCALE: 3/8"=1'-0" E-B01TOOT

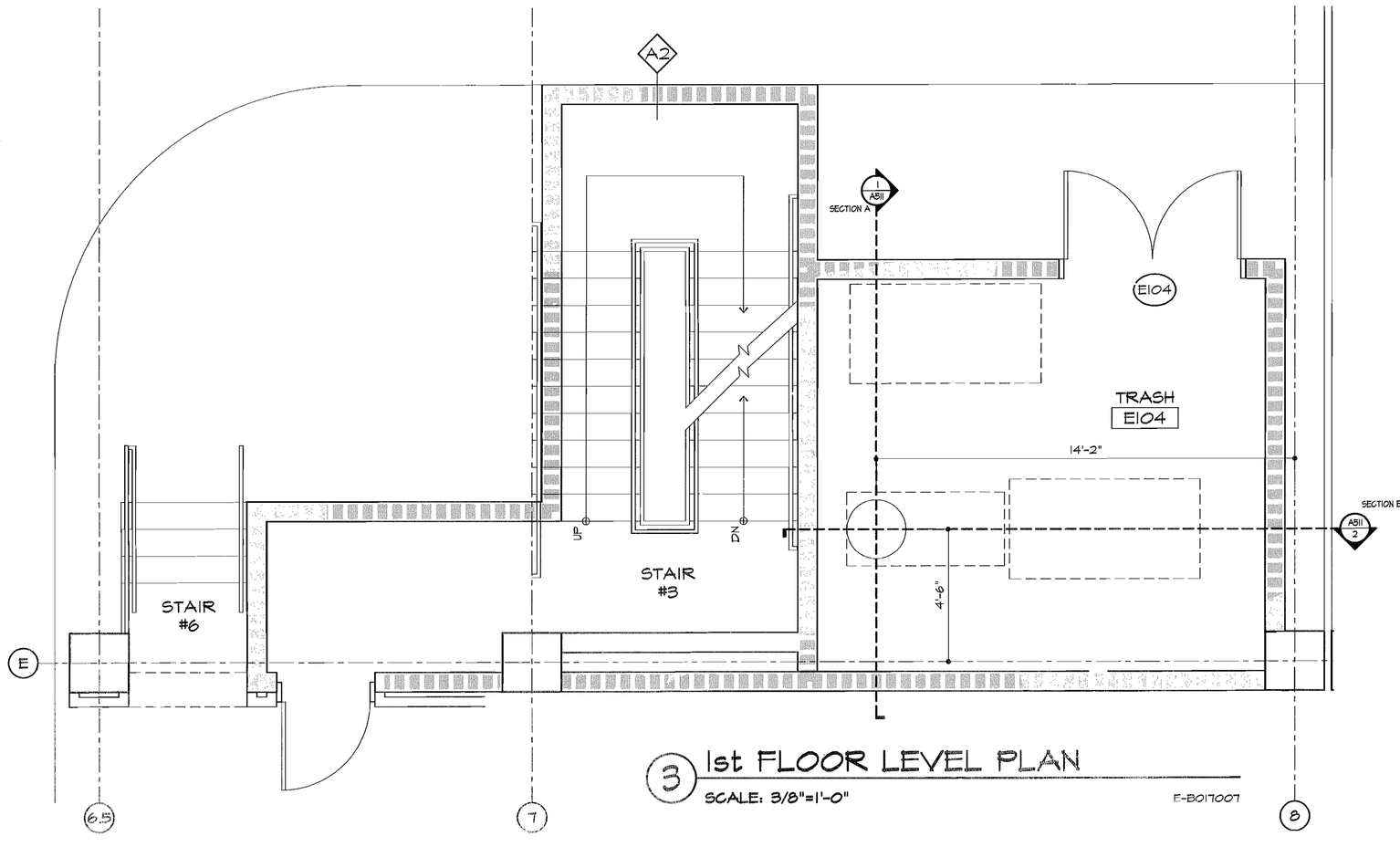

3 1st FLOOR LEVEL PLAN

SCALE: 3/8"=1'-0" E-B01TOOT

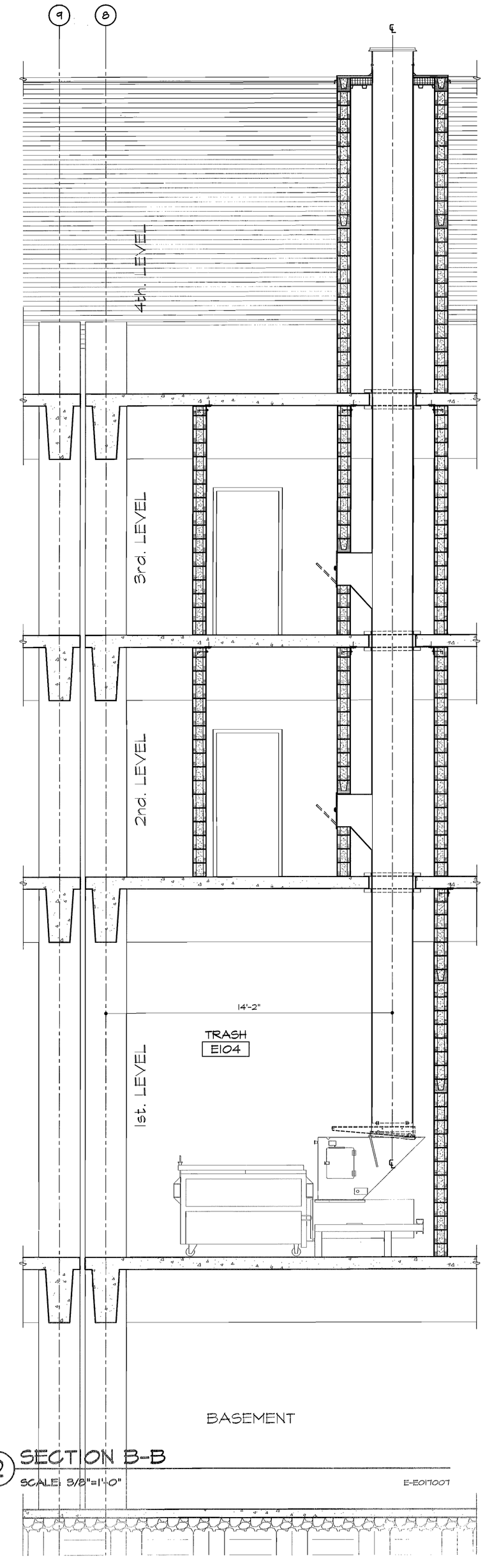

2 SECTION B-B

SCALE: 3/8"=1'-0" E-E01TOOT

FINK, ROBERTS & PETRIE, INC.
Consulting Engineers
4040 Vincennes Circle, Suite 300
Indianapolis, Indiana 46268

Eddy Street Commons
Phase II
Parking Garage
Project Number 108-004

Owner
City of South Bend, Indiana

Construction Manager
Kite Realty Group
30 South Meridian Street, Suite 1100
Indianapolis, Indiana 46204
317-577-5600

Structural Engineer
Fink, Roberts & Petrie, Inc.
4040 Vincennes Circle, Suite 300
Indianapolis, Indiana 46268
317-872-8400

Architect
Looney Ricks Kiss
175 Toyota Plaza, Suite 600
Memphis, Tennessee 38103
901-521-1440

Mechanical, Electrical & Plumbing Engineer
Circle Design Group
5510 South East Street, Suite F
Indianapolis, Indiana 46227
317-781-6200

Parking Consultant
Walker Parking Consultants
6602 East 75th Street, Suite 210
Indianapolis, Indiana 46250
317-842-6890

Civil Engineer/Landscape Architect
The Troyer Group
550 Union Street
Mishawaka, Indiana 46554
574-259-9976

100% Construction Documents
January 23, 2008

REGISTERED
PAUL CAMERON GRIGG
No. 10500056
STATE OF
INDIANA
1-23-08

ISSUE DATE	01/23/08
SCALE	3/8"=1'-0"
DRAWING NO.	07097
DRAWN BY	WV
CHECKED BY	WV

RESIDENTIAL TRASH CHUTE
PLANS AND SECTIONS

SHEET NO.
A511

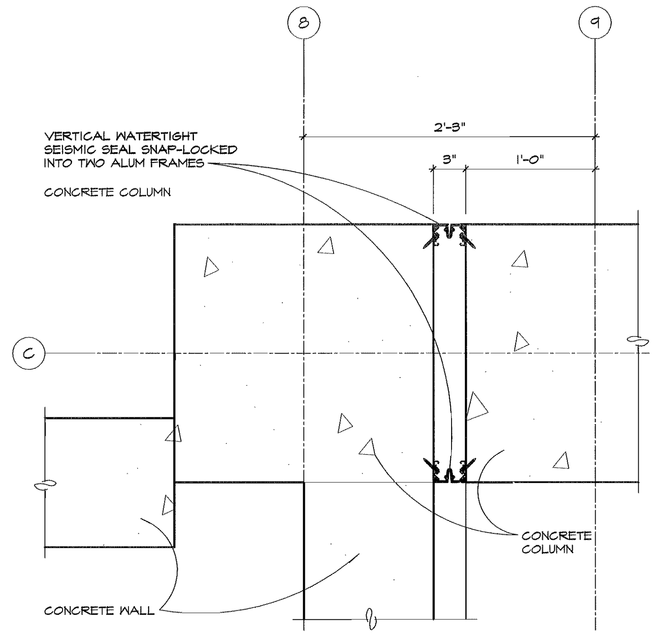

12 COLUMN DETAIL
SCALE : 1 1/2" = 0" ACAD

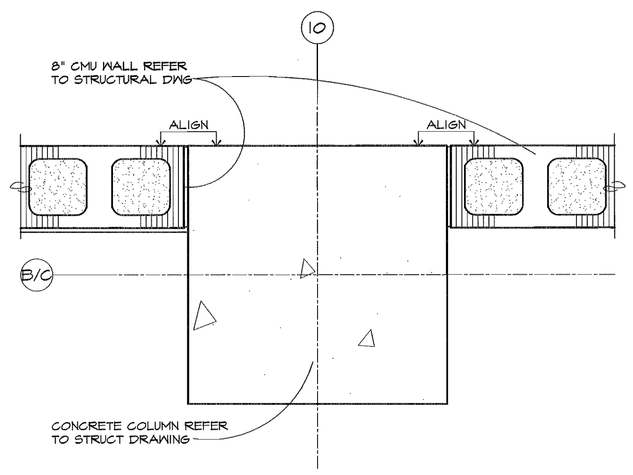

9 COLUMN / WALL DETAIL
SCALE : 1 1/2" = 0" ACAD

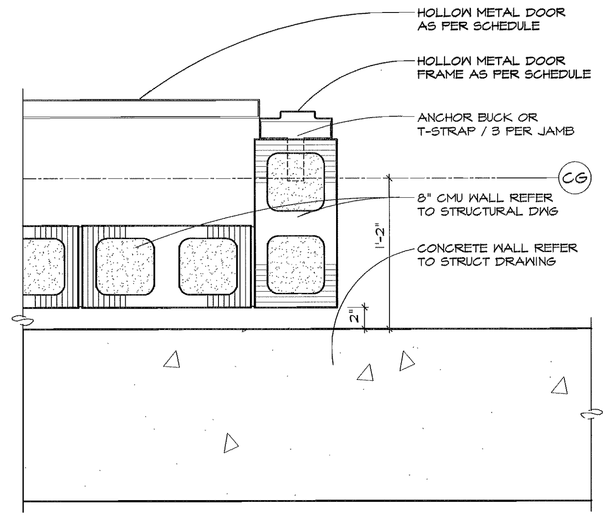

6 WALL DETAIL
SCALE : 1 1/2" = 0" ACAD

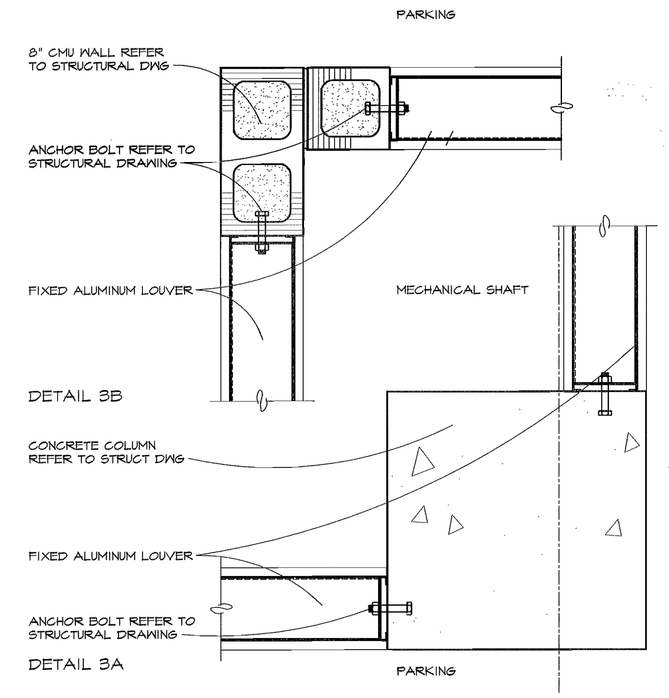

3 WALL DETAIL @ MECH SHAFT
SCALE : 1 1/2" = 0" ACAD

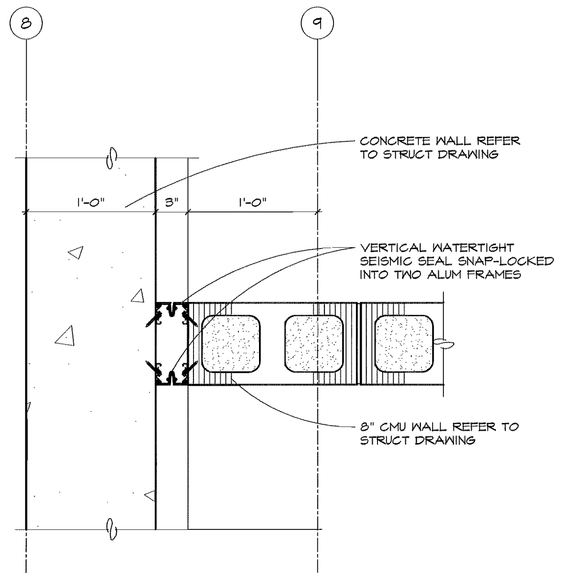

11 WALL CONNECTION DETAIL
SCALE : 1 1/2" = 0" ACAD

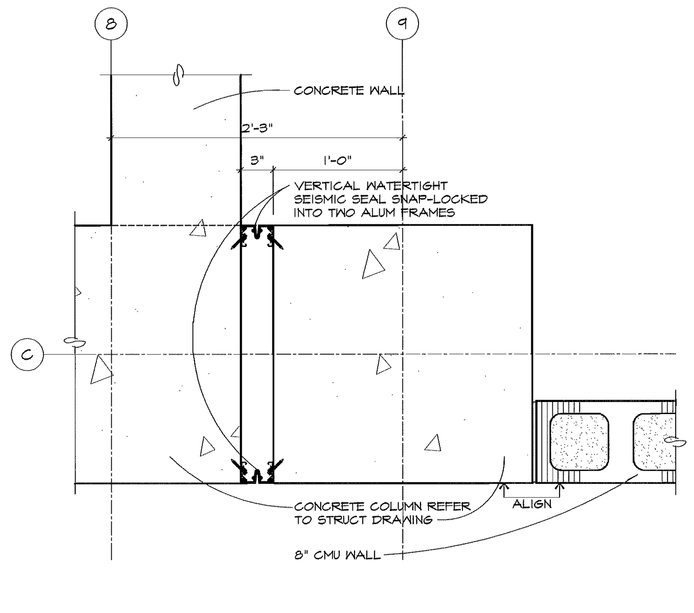

8 COLUMN DETAIL
SCALE : 1 1/2" = 0" ACAD

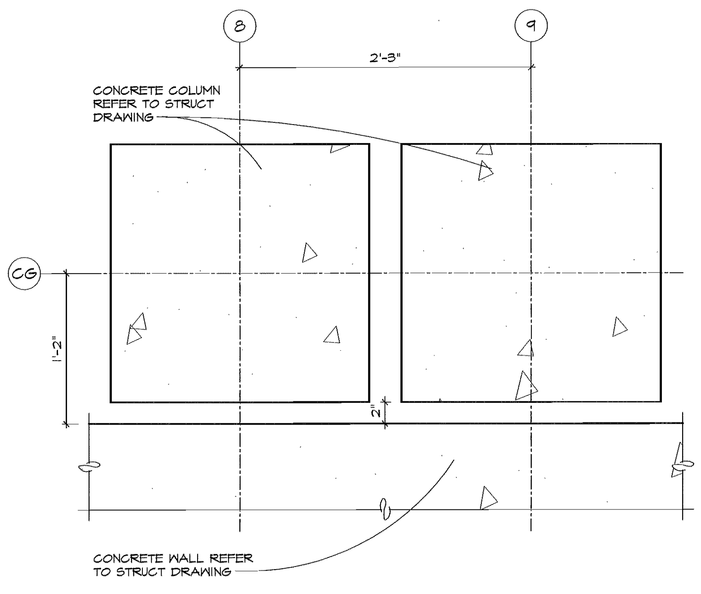

5 COLUMN DETAIL
SCALE : 1 1/2" = 0" ACAD

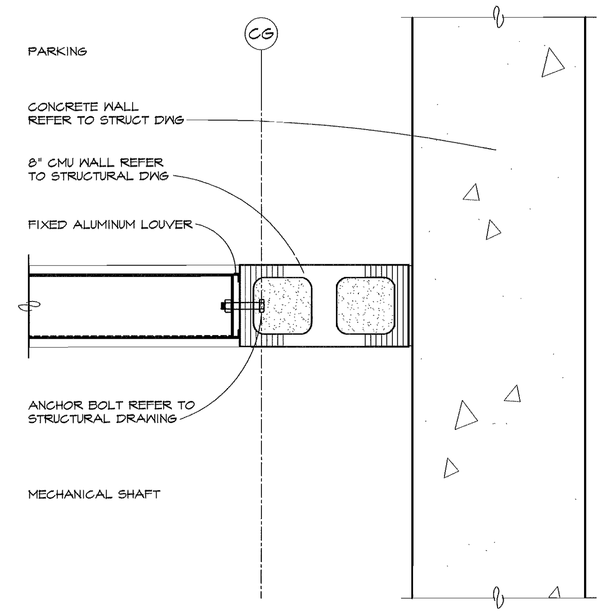

2 WALL DETAIL @ MECH SHAFT
SCALE : 1 1/2" = 0" ACAD

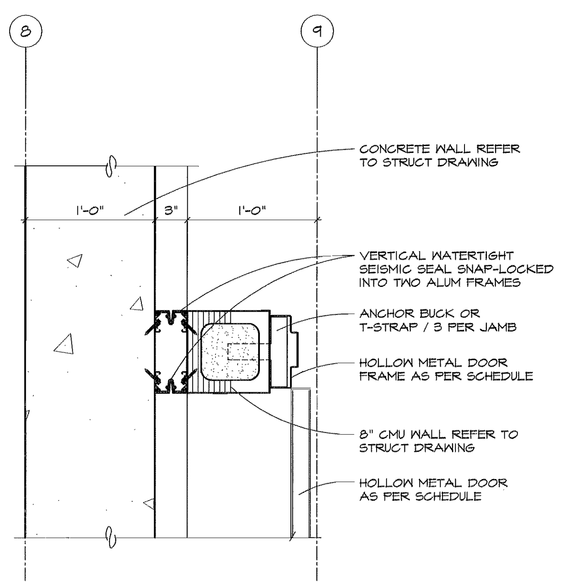

10 WALL CONNECTION DETAIL
SCALE : 1 1/2" = 0" ACAD

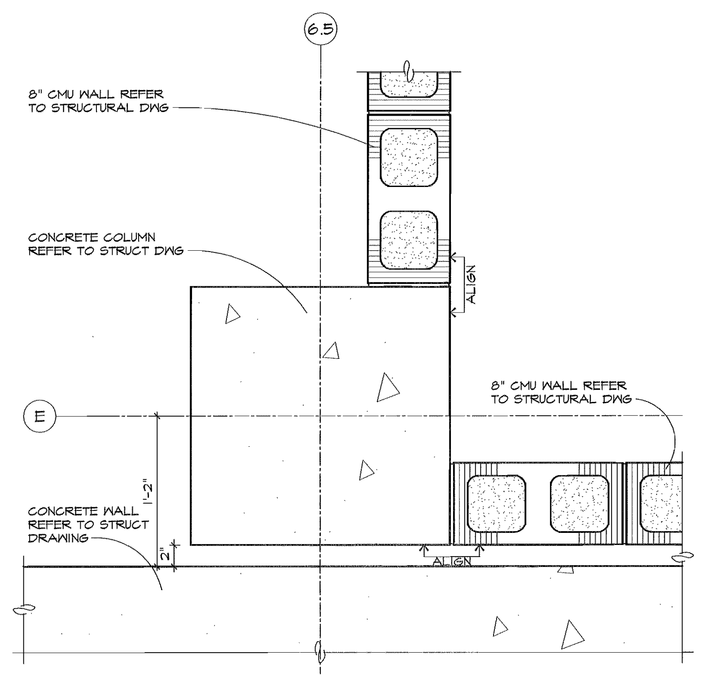

7 COLUMN / WALL DETAIL
SCALE : 1 1/2" = 0" ACAD

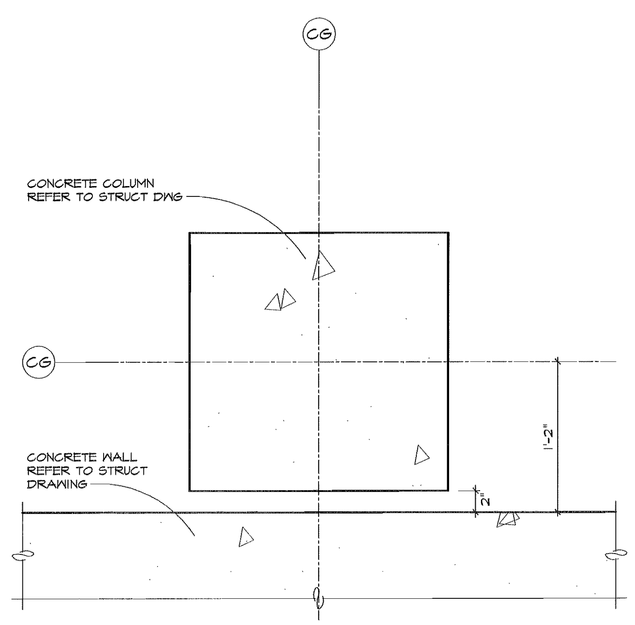

4 COLUMN DETAIL
SCALE : 1 1/2" = 0" ACAD

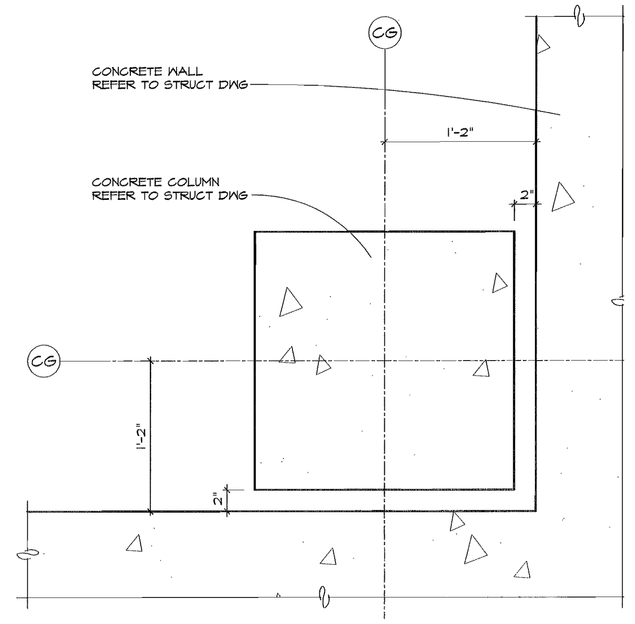

1 COLUMN DETAIL @ CORNER
SCALE : 1 1/2" = 0" ACAD

FINK ROBERTS & PETRIE, INC.
Engineers
4040 Vincennes Circle, Suite 300
Indianapolis, IN 46268

Eddy Street C
Phase
Parking G
Project Numb

Owner
City of South Ben

Construction Manager
Kite Realty Group
30 South Meridian Street, Suite 1100
Indianapolis, Indiana 46204
317-577-5600

Structural Engineer
Fink, Roberts & Petrie, Inc.
4040 Vincennes Circle, Suite 300
Indianapolis, Indiana 46268
317-872-8400

Architect
Looney Ricks Kiss
175 Toyota Plaza, Suite 600
Memphis, Tennessee 38103
901-521-1440

Mechanical, Electrical & Plumbing Engineer
Circle Design Group
5510 South East Street, Suite F
Indianapolis, Indiana 46227
317-781-6200

Parking Consultant
Walker Parking Consultants
6602 East 75th Street, Suite 210
Indianapolis, Indiana 46250
317-842-6890

Civil Engineer/Landscape Architect
The Troyer Group
550 Union Street
Mishawaka, Indiana 46554
574-259-9976

100% Construction Documents
January 23, 2008

REGISTERED ARCHITECT
No. 10500056
STATE OF INDIANA
1-23-08

DESIGN DATE	DRAWN BY
01/23/08	EE
CHECKED BY	
MV	

PLAN DETAILS

A601

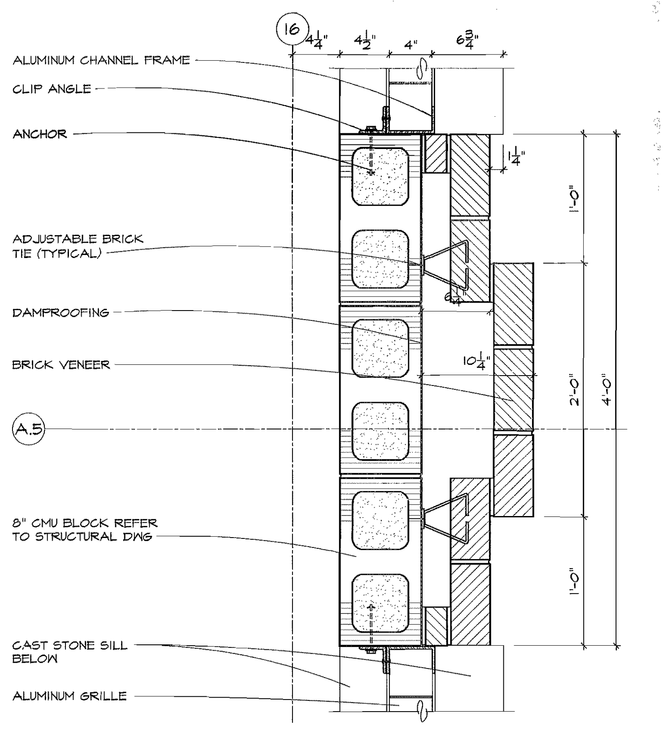

12 FAKE COLUMN DETAIL

SCALE : 1 1/2" - 0" ACAD

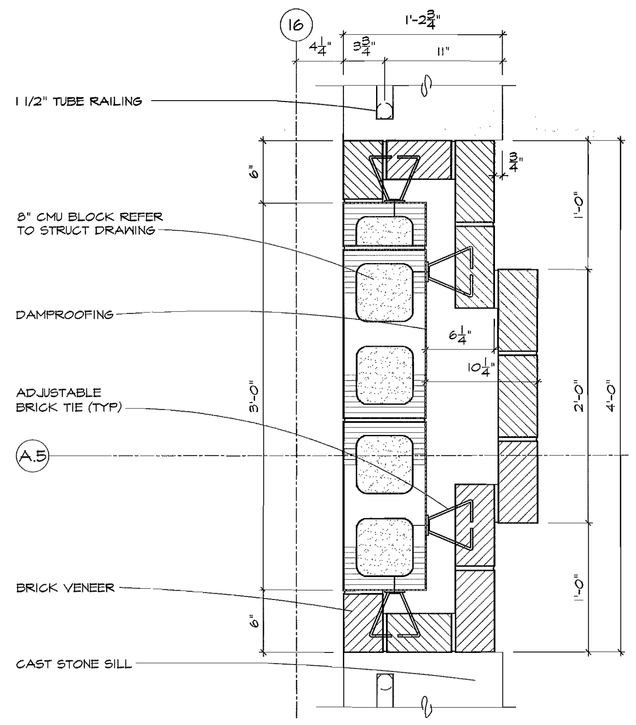

9 FAKE COLUMN DETAIL

SCALE : 1 1/2" - 0" ACAD

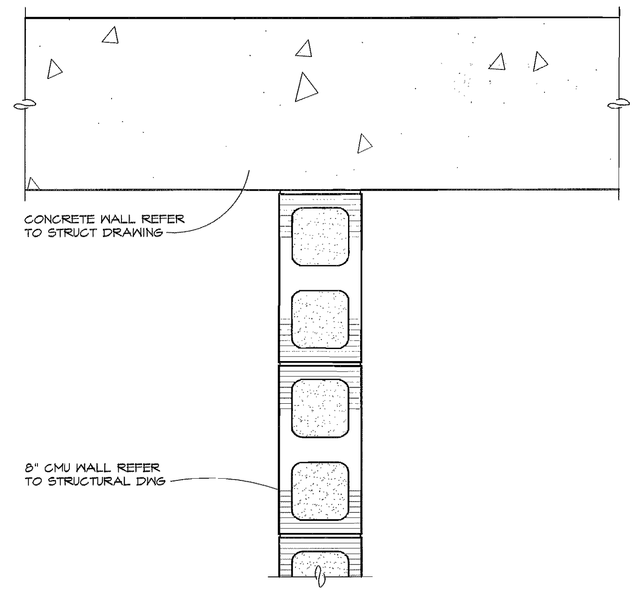

6 COLUMN DETAIL @ CORNER

SCALE : 1 1/2" - 0" ACAD

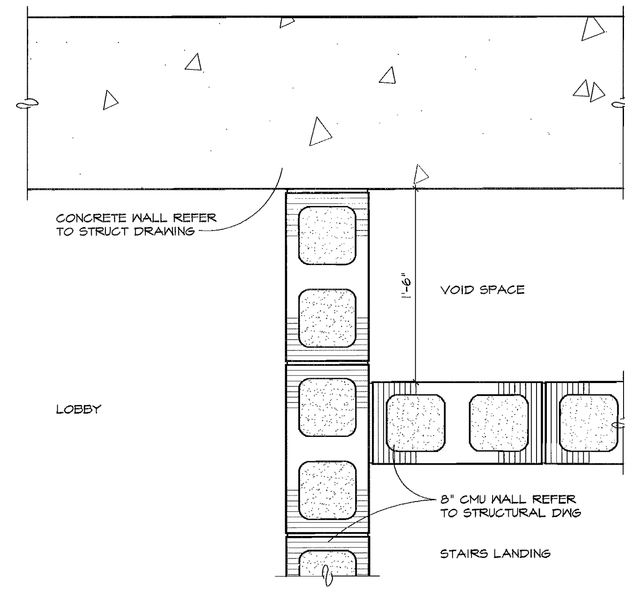

3 WALL CONNECTION DETAIL

SCALE : 1 1/2" - 0"

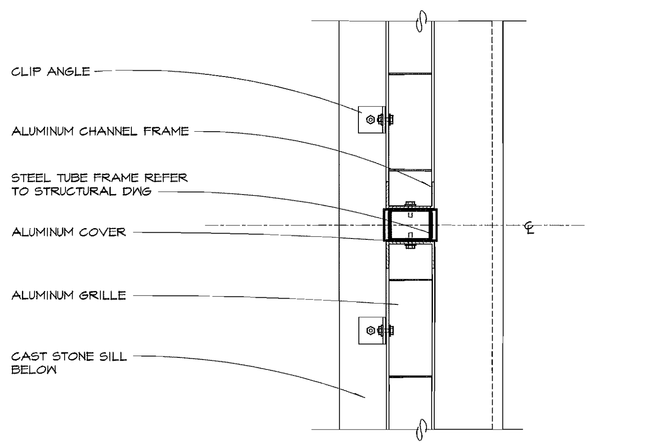

11 ALUMINUM GRILLE DETAIL

SCALE : 1 1/2" - 0" ACAD

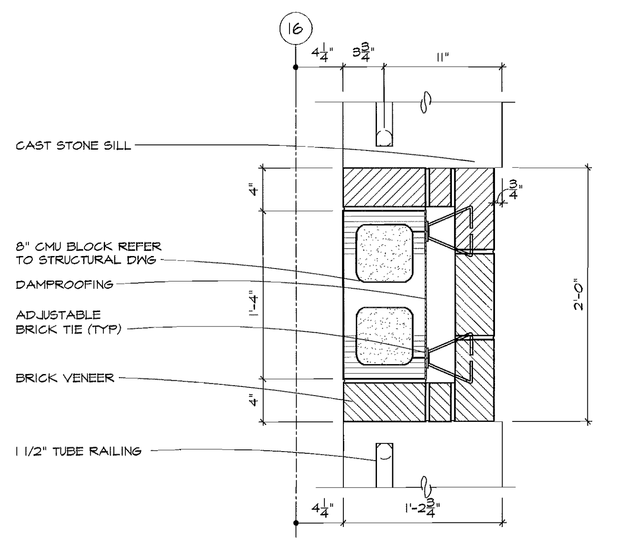

8 COLUMN DETAIL

SCALE : 1 1/2" - 0" ACAD

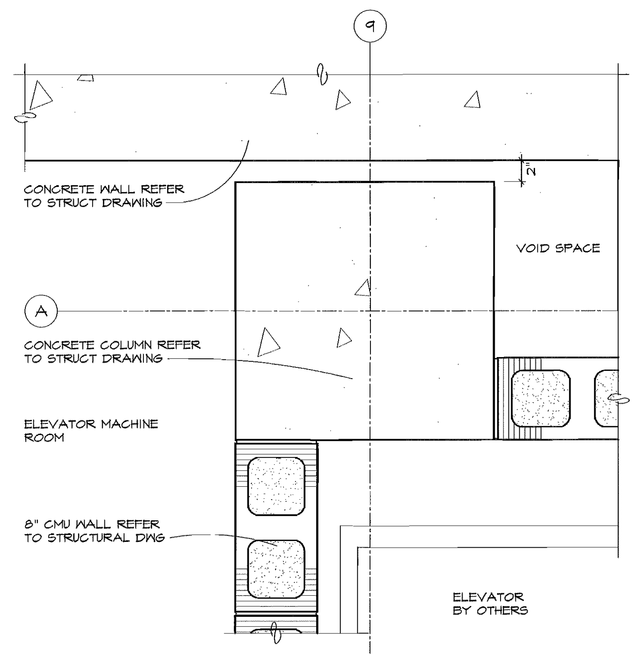

5 COL / WALL DETAIL @ ELEV SHAFT

SCALE : 1 1/2" - 0" ACAD

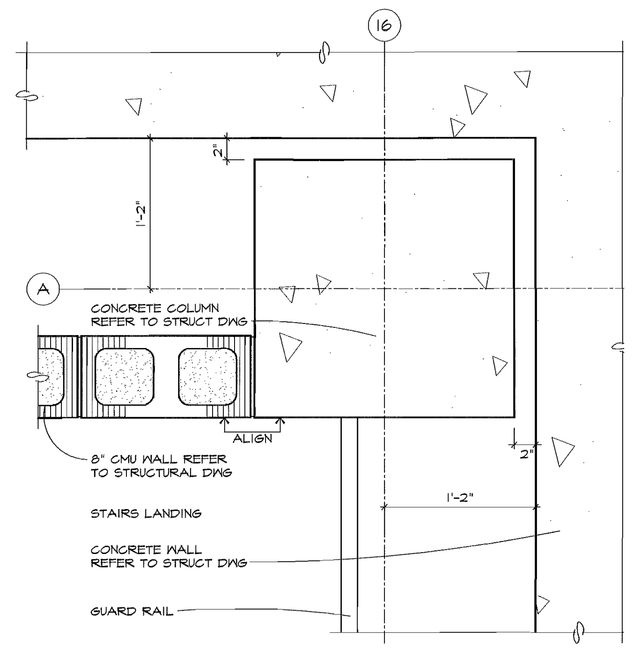

2 COLUMN DETAIL @ CORNER

SCALE : 1 1/2" - 0"

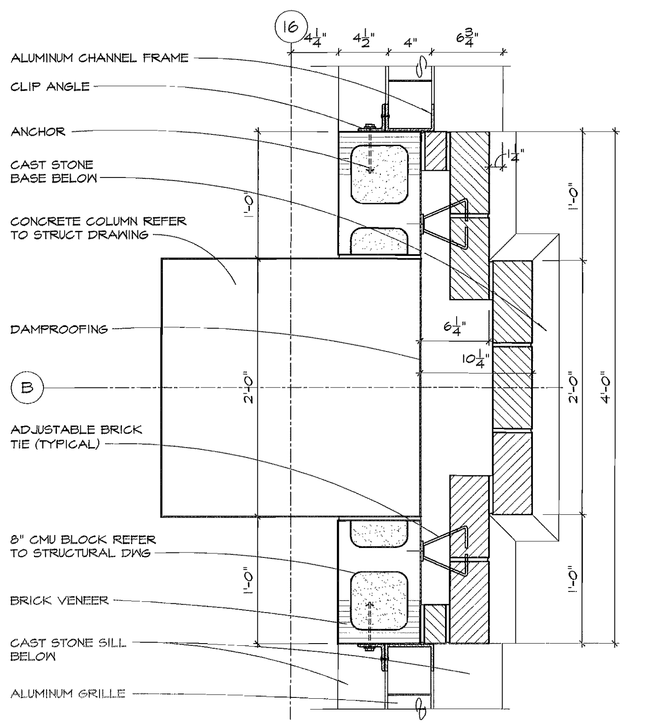

10 COLUMN DETAIL

SCALE : 1 1/2" - 0" ACAD

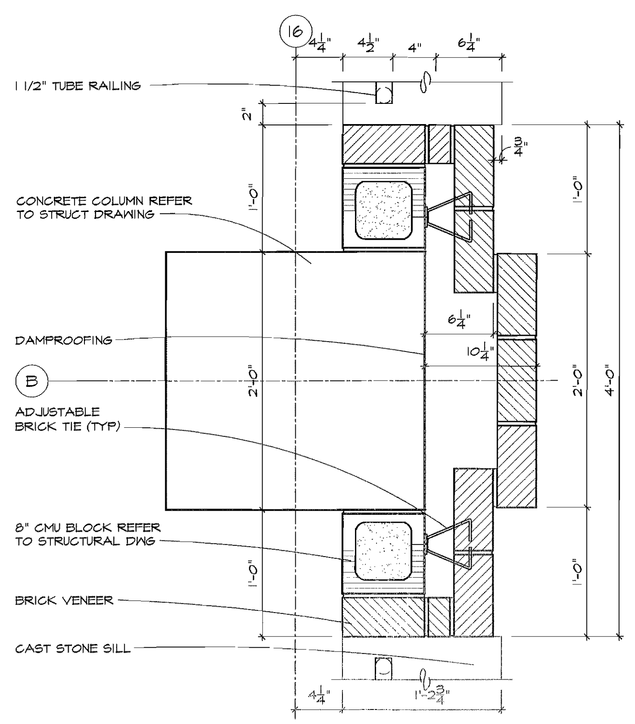

7 COLUMN DETAIL

SCALE : 1 1/2" - 0" ACAD

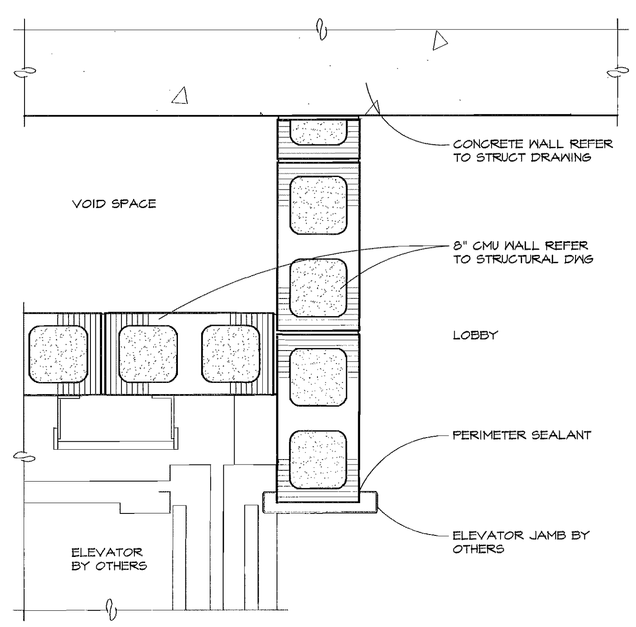

4 WALL DETAIL @ ELEVATOR SHAFT

SCALE : 1 1/2" - 0" ACAD

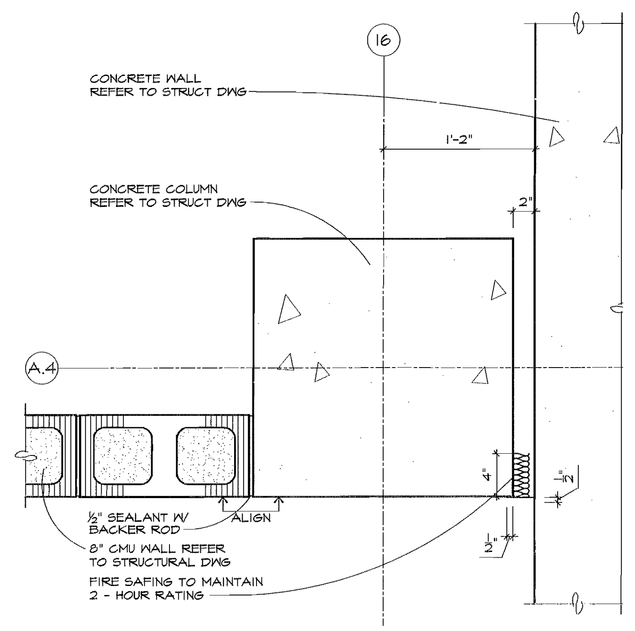

1 COLUMN DETAIL

SCALE : 1 1/2" - 0"

FINK ROBERTS & PETRIE, INC.
Consulting Engineers
4040 Vincennes Circle, Suite 300
Indianapolis, Indiana 46268

Eddy Street Commons
Phase II
Parking Garage
Project Number 108-004

Owner
City of South Bend, Indiana

Construction Manager
Kite Realty Group
30 South Meridian Street, Suite 1100
Indianapolis, Indiana 46204
317-577-5600

Structural Engineer
Fink, Roberts & Petrie, Inc.
4040 Vincennes Circle, Suite 300
Indianapolis, Indiana 46268
317-872-8400

Architect
Looney Ricks Kiss
175 Toyota Plaza, Suite 600
Memphis, Tennessee 38103
901-521-1440

Mechanical, Electrical & Plumbing Engineer
Circle Design Group
5510 South East Street, Suite F
Indianapolis, Indiana 46227
317-781-0200

Parking Consultant
Walker Parking Consultants
6602 East 75th Street, Suite 210
Indianapolis, Indiana 46250
317-842-6890

Civil Engineer/Landscape Architect
The Troyer Group
550 Union Street
Mishawaka, Indiana 46554
574-259-9976

100% Construction Documents
January 23, 2008

PAUL CAMERON ROSE
REGISTERED
No. 10500056
STATE OF
INDIANA
ARCHITECT
1-23-08

ISSUE DATE 01/23/08
ISSUE PACKAGE NO. 07097
ISSUE DRAWN BY EpE
CHECKED BY WV

PLAN DETAILS

SHEET NO. A602

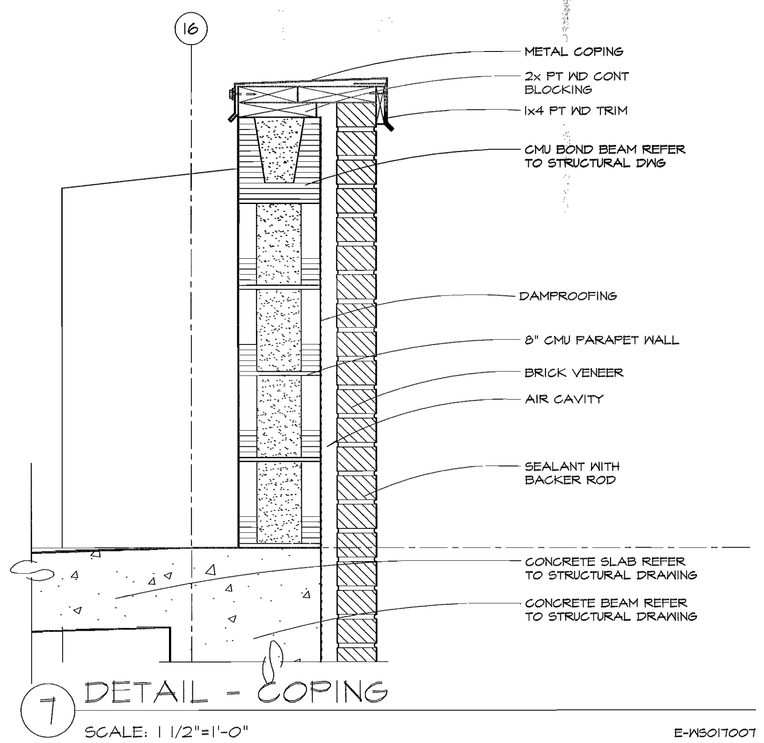

7 DETAIL - COPING

SCALE: 1 1/2"=1'-0"

E-KS017007

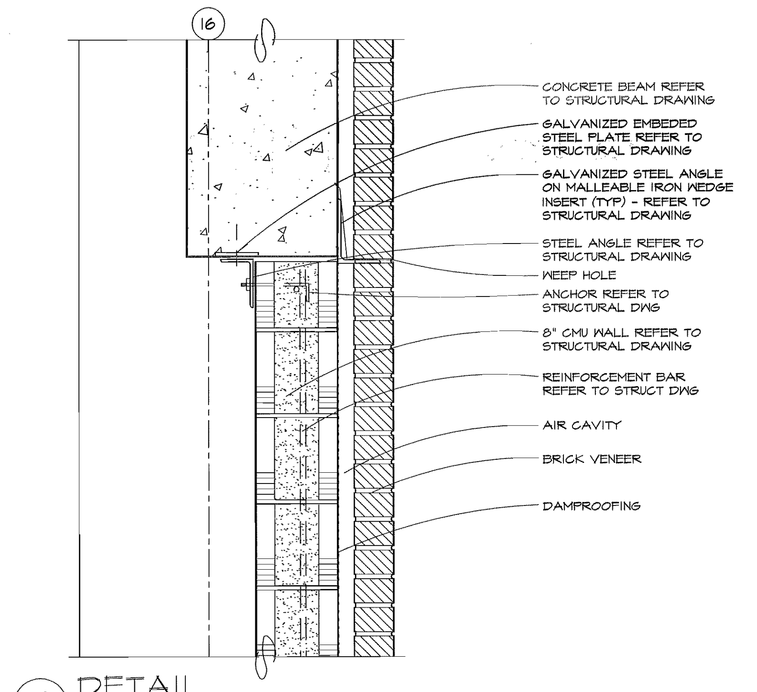

4 DETAIL

SCALE: 1 1/2"=1'-0"

E-KS017007

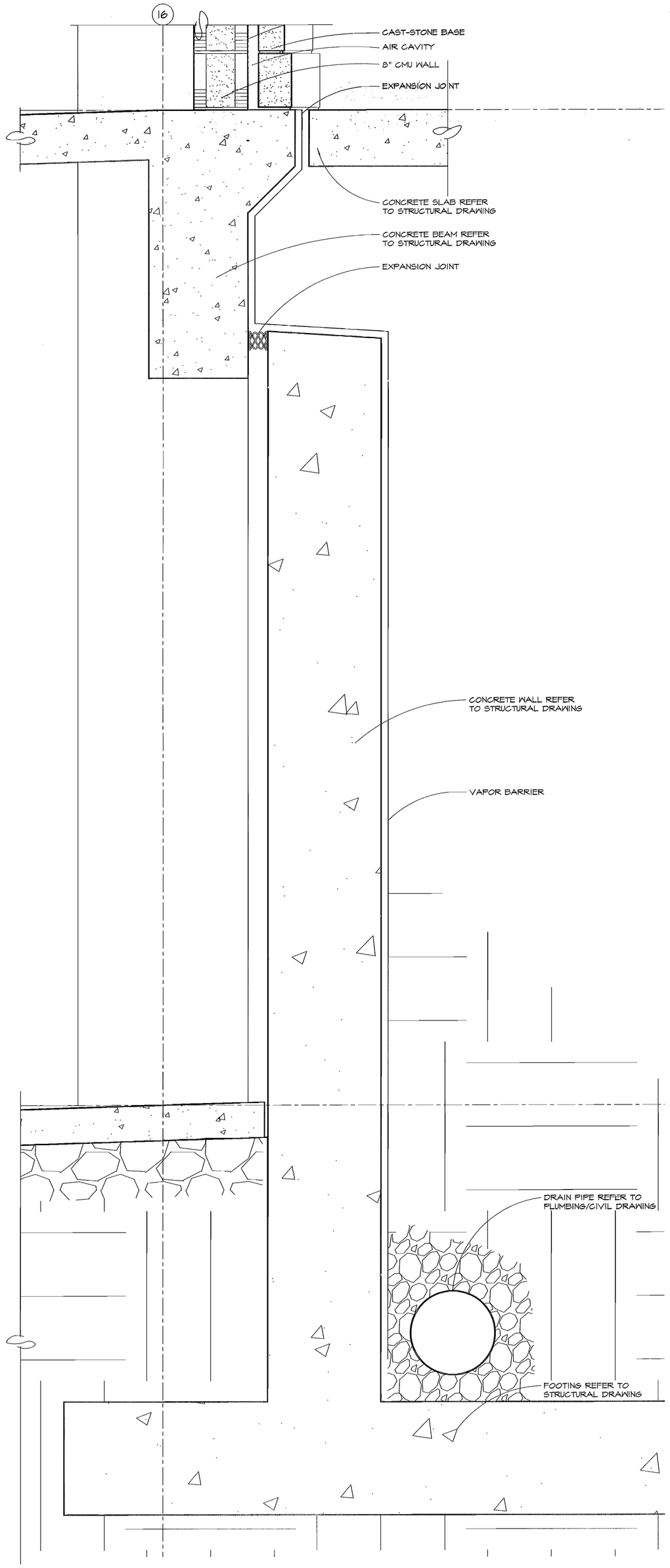

1 DETAIL

SCALE: 1 1/2"=1'-0"

E-KS017007

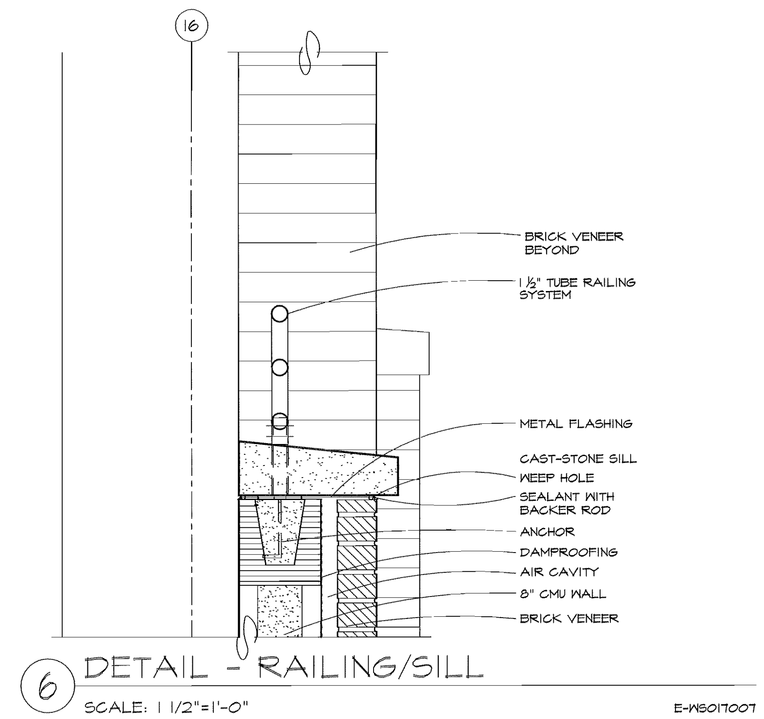

6 DETAIL - RAILING/SILL

SCALE: 1 1/2"=1'-0"

E-KS017007

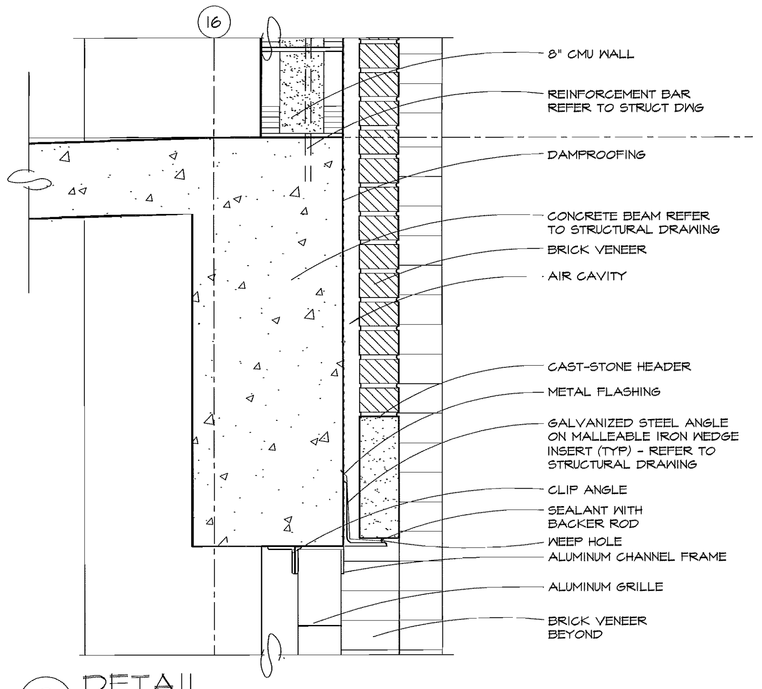

3 DETAIL

SCALE: 1 1/2"=1'-0"

E-KS017007

5 DETAIL - HEADER

SCALE: 1 1/2"=1'-0"

E-KS017007

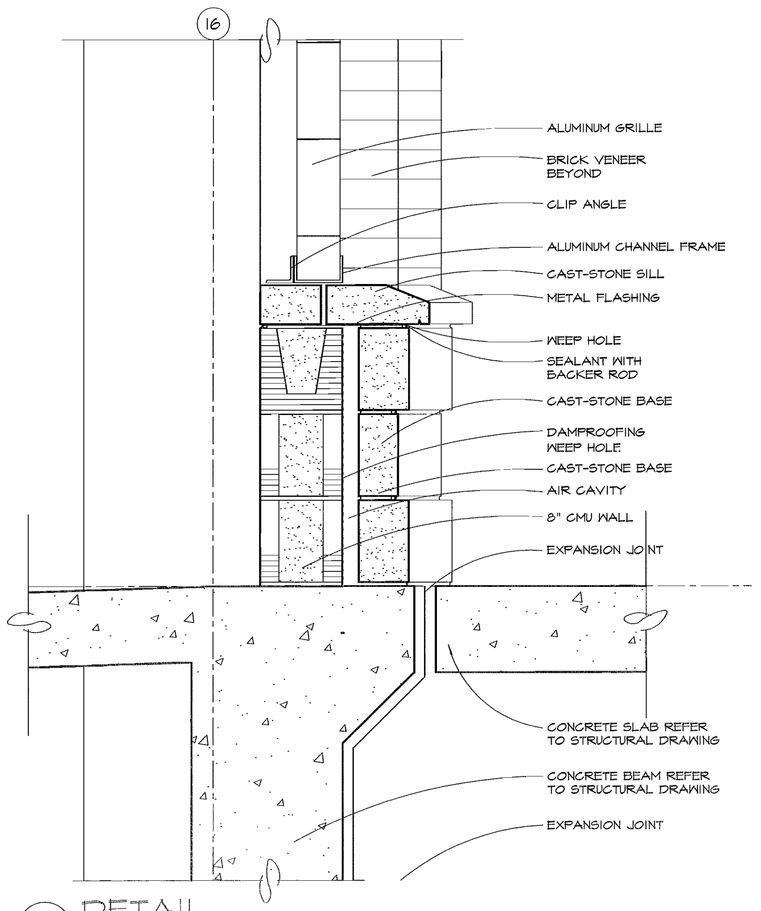

2 DETAIL

SCALE: 1 1/2"=1'-0"

E-KS017007

FINK ROBERTS & PETRIE, INC.
Consulting Engineers
4040 Vincennes Circle, Suite 300
Indianapolis, Indiana 46268

Eddy Street Commons Phase II Parking Garage

Project Number 108-004

Owner
City of South Bend, Indiana

Construction Manager
Kite Realty Group
30 South Meridian Street, Suite 1100
Indianapolis, Indiana 46204
317-577-5600

Structural Engineer
Fink, Roberts & Petrie, Inc.
4040 Vincennes Circle, Suite 300
Indianapolis, Indiana 46268
317-872-8400

Architect
Looney Ricks Kiss
175 Toyota Plaza, Suite 600
Memphis, Tennessee 38103
901-521-1440

Mechanical, Electrical & Plumbing Engineer
Circle Design Group
5510 South East Street, Suite F
Indianapolis, Indiana 46227
317-781-6200

Parking Consultant
Walker Parking Consultants
6602 East 75th Street, Suite 210
Indianapolis, Indiana 46250
317-842-6890

Civil Engineer/Landscape Architect
The Troyer Group
550 Union Street
Mishawaka, Indiana 46554
574-259-9976

100% Construction Documents
January 23, 2008

WADE CAMERON REGISTERED No. 10500056 STATE OF INDIANA ARCHITECT
1-23-08

ISSUED DATE	ISSUED FOR	ISSUED BY	CHECKED BY
01/23/08	07/09	MV	MV

SHEET TITLE
SECTION DETAILS

SHEET NO.
A603

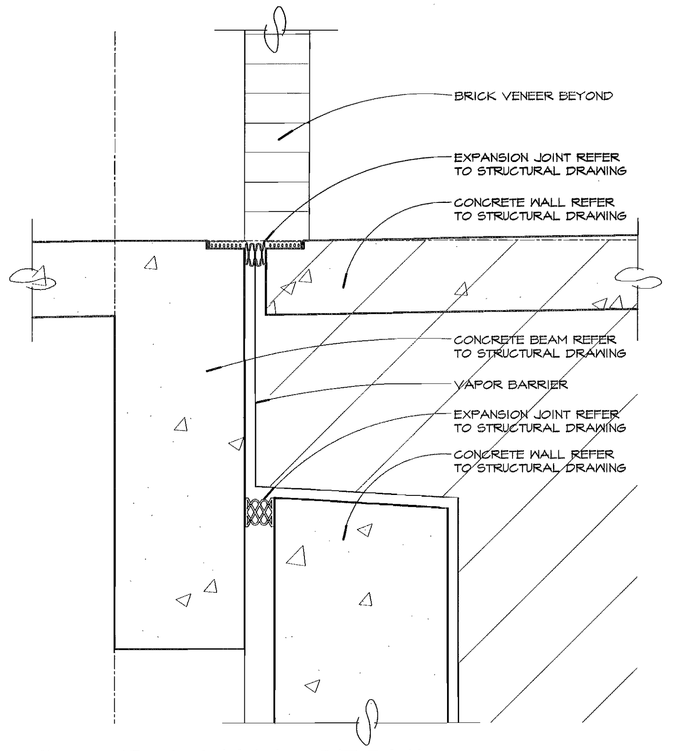

3 FLOOR & WALL DETAIL
SCALE: 1 1/2"=1'-0"

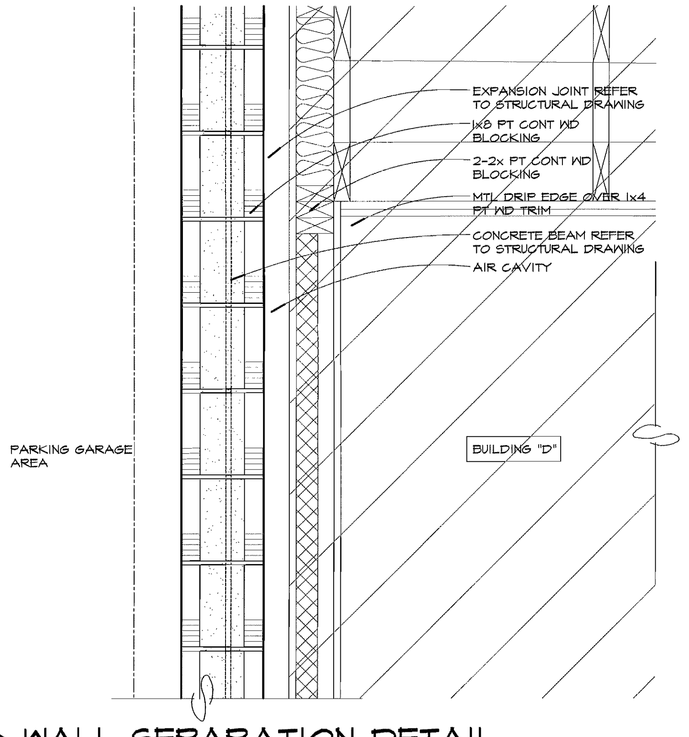

5 WALL SEPARATION DETAIL
SCALE: 1 1/2"=1'-0"

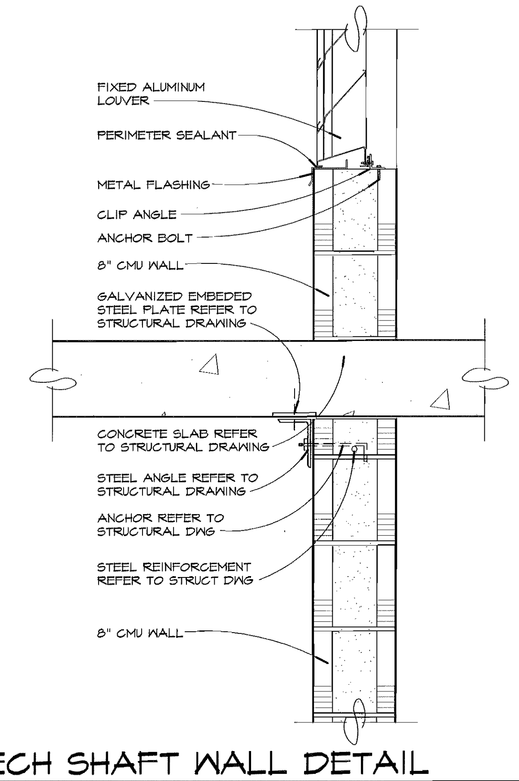

2 MECH SHAFT WALL DETAIL
SCALE: 1 1/2"=1'-0"

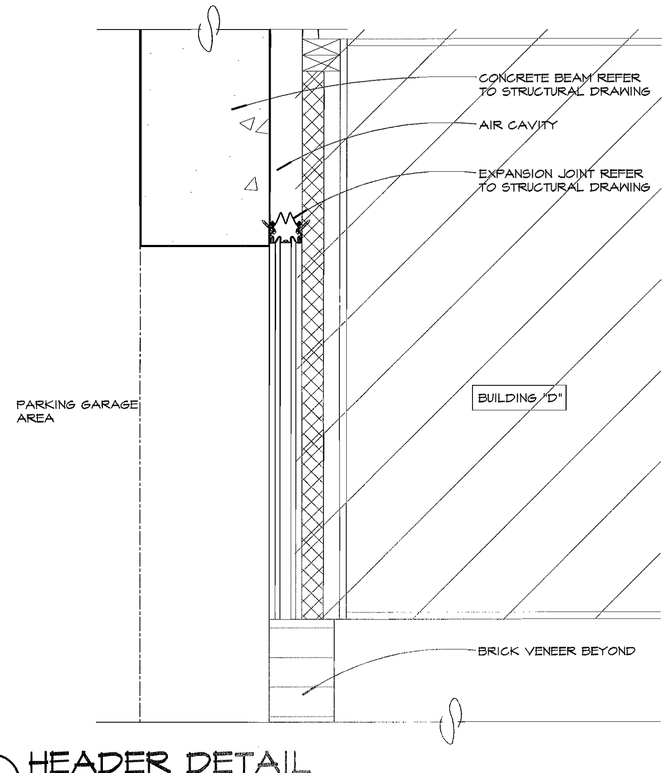

4 HEADER DETAIL
SCALE: 1 1/2"=1'-0"

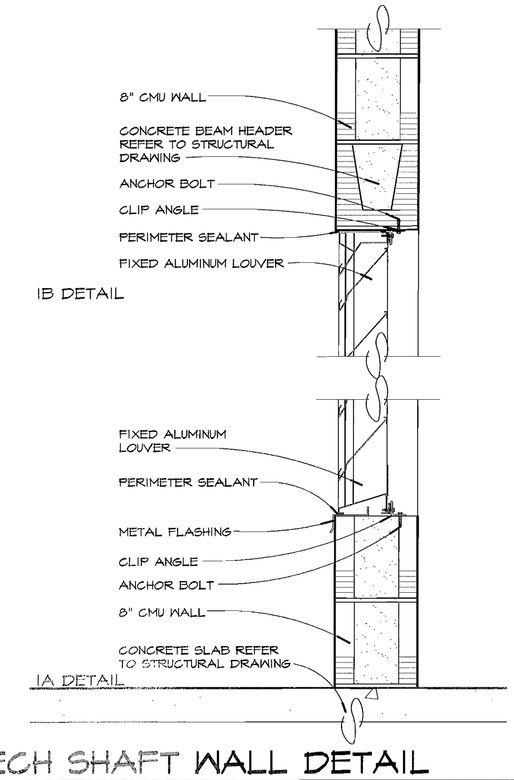

1 MECH SHAFT WALL DETAIL
SCALE: 1 1/2"=1'-0"

FINK ROBERTS & PETRIE, INC.
Consulting Engineers
4040 Vincennes Circle Suite 300
Indianapolis, Indiana 46268

Eddy Street Commons
Phase II
Parking Garage
Project Number 108-004

Owner
City of South Bend, Indiana

Construction Manager
Kite Realty Group
30 South Meridian Street, Suite 1100
Indianapolis, Indiana 46204
317-577-5600

Structural Engineer
Fink, Roberts & Petrie, Inc.
4040 Vincennes Circle, Suite 300
Indianapolis, Indiana 46268
317-872-8400

Architect
Looney Ricks Kiss
175 Toyota Plaza, Suite 600
Memphis, Tennessee 38103
901-521-1440

Mechanical, Electrical & Plumbing Engineer
Circle Design Group
5510 South East Street, Suite F
Indianapolis, Indiana 46227
317-781-6200

Parking Consultant
Walker Parking Consultants
6602 East 75th Street, Suite 210
Indianapolis, Indiana 46250
317-842-6890

Civil Engineer/Landscape Architect
The Troyer Group
550 Union Street
Mishawaka, Indiana 46554
574-259-9976

100% Construction Documents
January 23, 2008

PAGE CAMERON CLOSE
REGISTERED
No. 10500056
STATE OF INDIANA
REGISTERED
1-23-08

DESIGN DATE	DESIGN PROJECT NO.	DESIGN DRAWN BY	CHECKED BY
01/23/08	07097	EDE	MV

SECTION DETAILS

SHEET NO.
A604

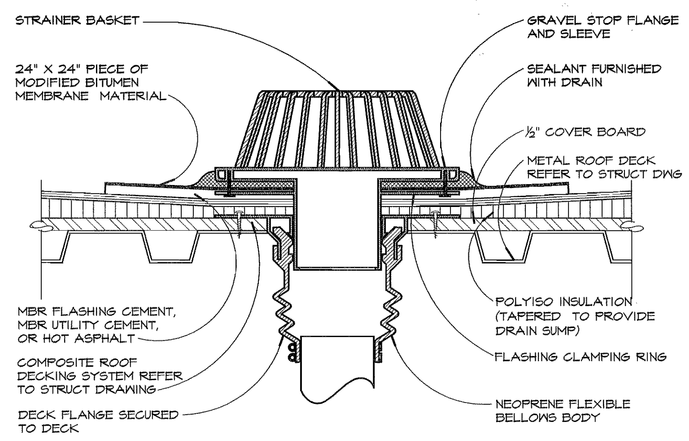

12 ROOF DRAIN DETAIL
SCALE: NTS

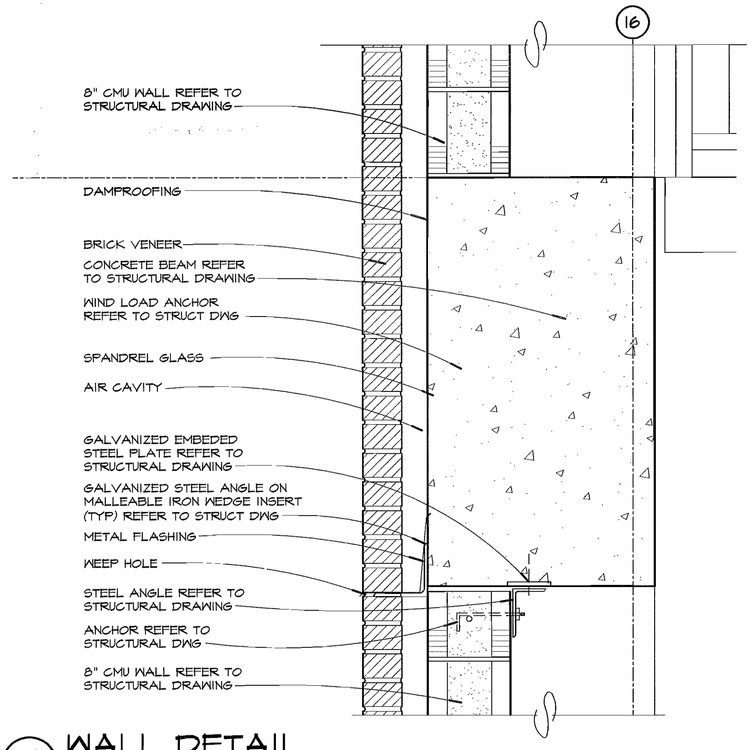

9 WALL DETAIL
SCALE: 1 1/2"=1'-0"

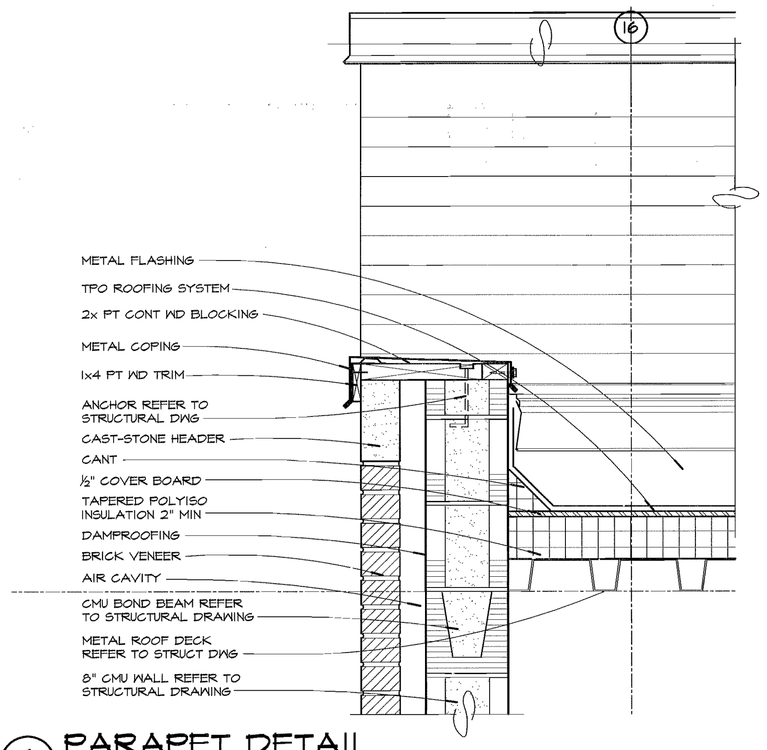

6 PARAPET DETAIL
SCALE: 1 1/2"=1'-0"

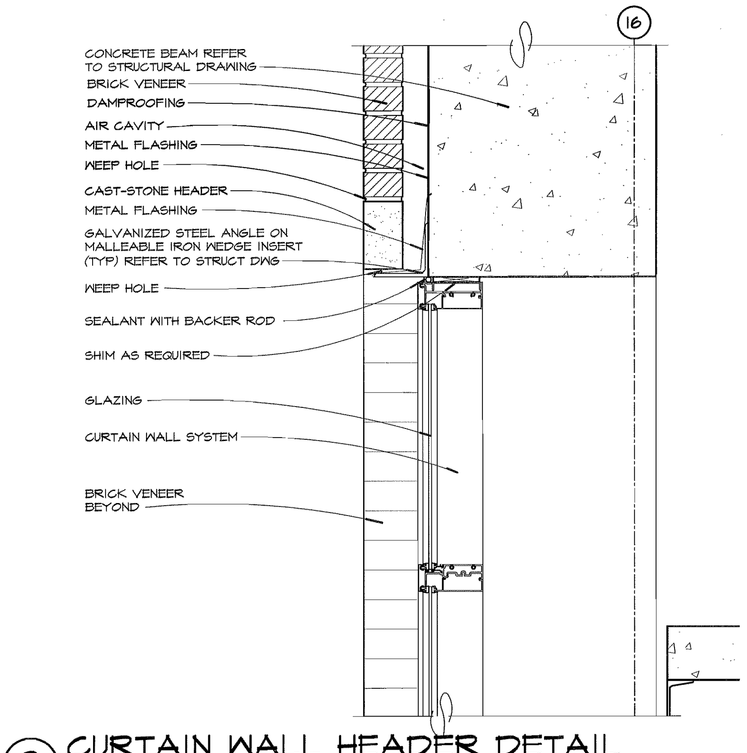

3 CURTAIN WALL HEADER DETAIL
SCALE: 1 1/2"=1'-0"

11 ROOF DETAIL
SCALE: 1 1/2"=1'-0"

8 WALL DETAIL
SCALE: 1 1/2"=1'-0"

5 UPPER LEVEL HEADER DETAIL
SCALE: 1 1/2"=1'-0"

2 CURTAIN WALL SPANDREL DETAIL
SCALE: 1 1/2"=1'-0"

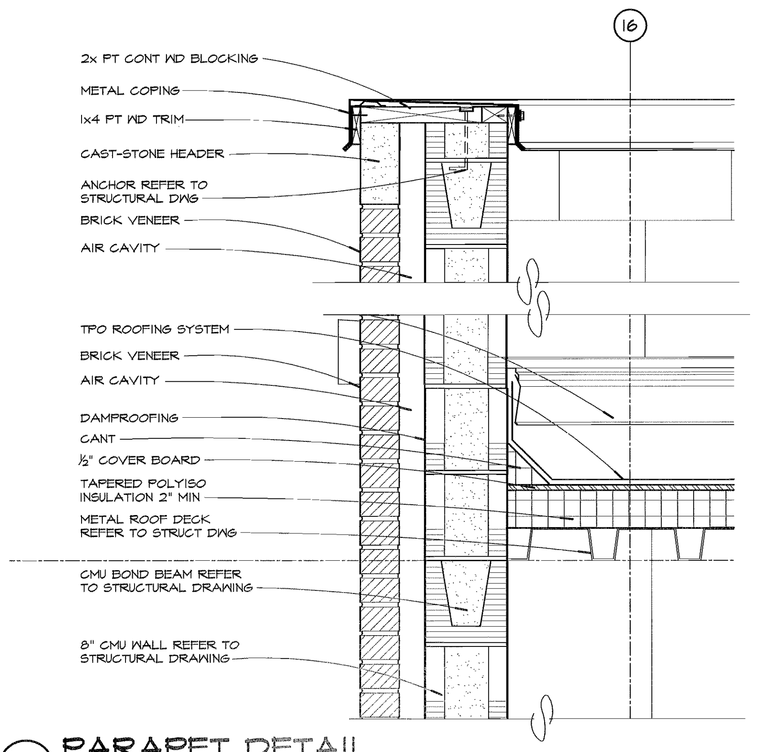

10 PARAPET DETAIL
SCALE: 1 1/2"=1'-0"

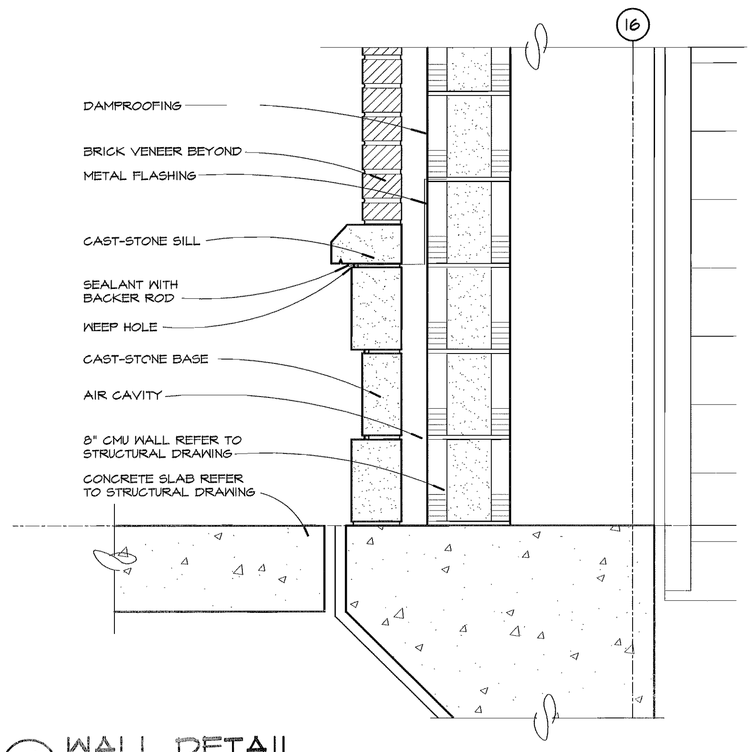

7 WALL DETAIL
SCALE: 1 1/2"=1'-0"

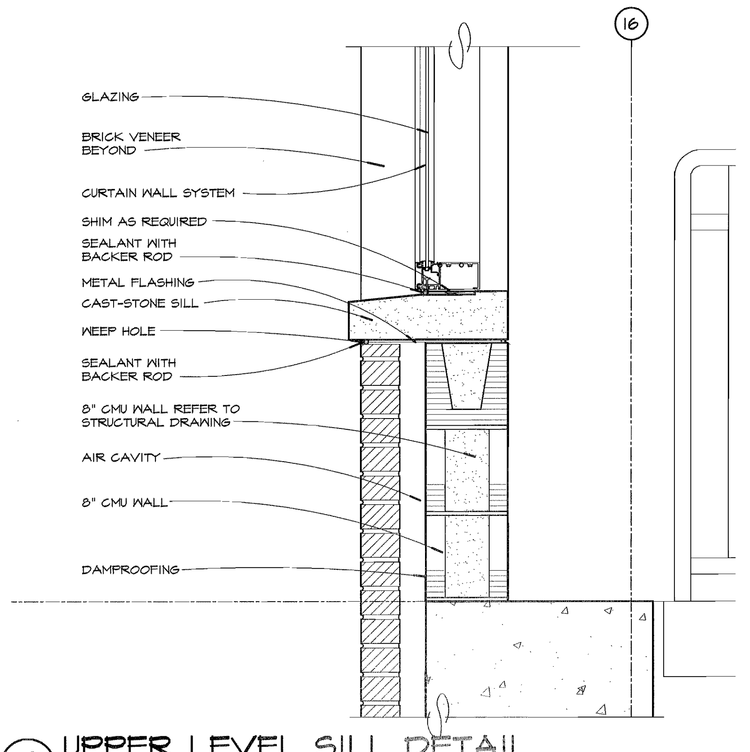

4 UPPER LEVEL SILL DETAIL
SCALE: 1 1/2"=1'-0"

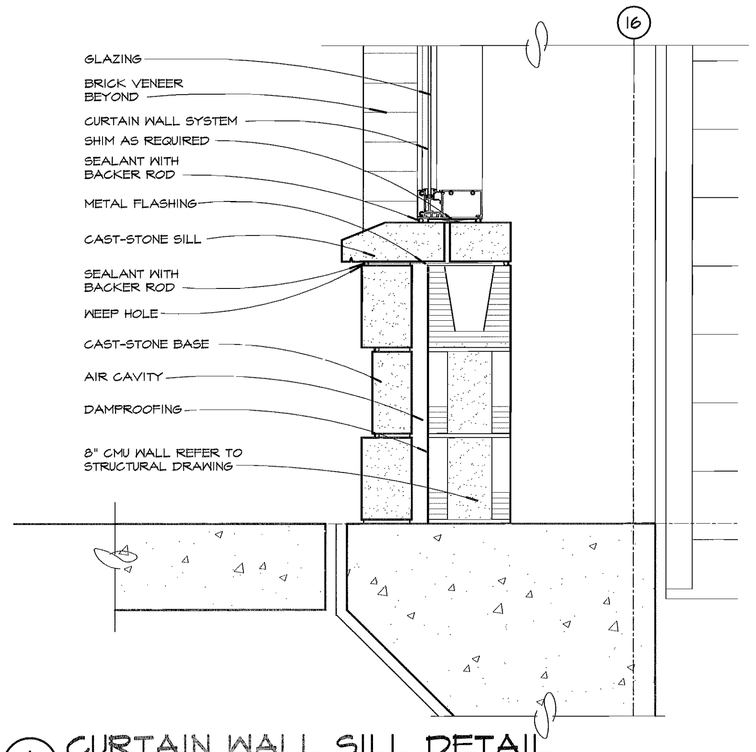

1 CURTAIN WALL SILL DETAIL
SCALE: 1 1/2"=1'-0"

FINK ROBERTS & PETRIE, INC.
Consulting Engineers
4040 Vincennes Circle, Suite 300
Indianapolis, Indiana 46268

Eddy Street Commons
Phase II
Parking Garage
Project Number 108-004

Owner
City of South Bend, Indiana

Construction Manager
Kite Realty Group
30 South Meridian Street, Suite 1100
Indianapolis, Indiana 46204
317-577-5600

Structural Engineer
Fink, Roberts & Petrie, Inc.
4040 Vincennes Circle, Suite 300
Indianapolis, Indiana 46268
317-872-8400

Architect
Looney Ricks Kiss
175 Toyota Plaza, Suite 600
Memphis, Tennessee 38103
901-521-1440

Mechanical, Electrical & Plumbing Engineer
Circle Design Group
5510 South East Street, Suite F
Indianapolis, Indiana 46227
317-781-6200

Parking Consultant
Walker Parking Consultants
6602 East 75th Street, Suite 210
Indianapolis, Indiana 46250
317-842-6890

Civil Engineer/Landscape Architect
The Troyer Group
550 Union Street
Mishawaka, Indiana 46554
574-259-9976

100% Construction Documents
January 23, 2008

PHILIP CAMERON FINK
REGISTERED
No. 10500056
STATE OF
INDIANA
1-22-08

ISSUE DATE: 01/23/08
ISSUE BOOK #: 07097
DRAWN BY: EpE
CHECKED BY: MV

SHEET TITLE: SECTION / ROOF DETAILS

SHEET NO.: A605

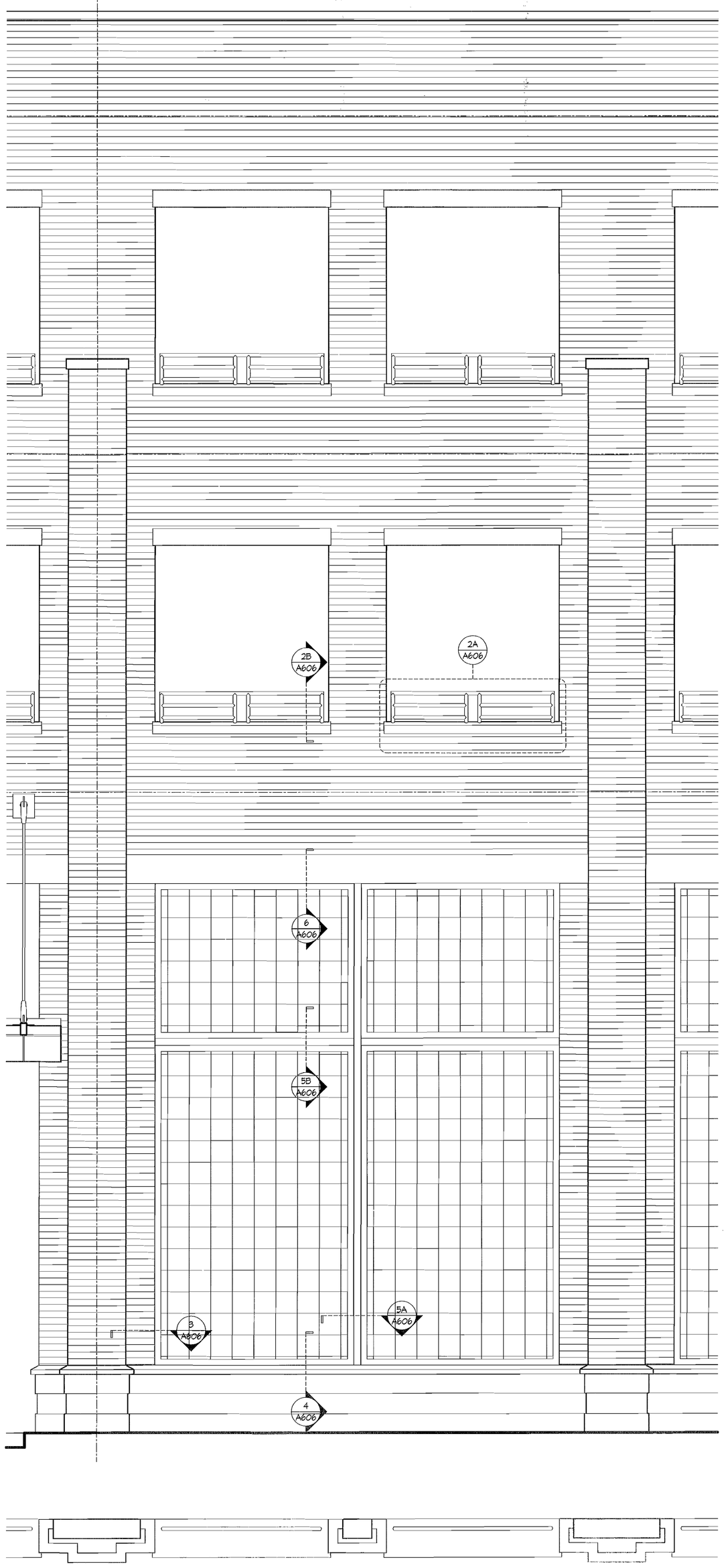

1 ENLARGED PARTIAL PLAN AND ELEVATION

SCALE: 1/2"=1'-0"

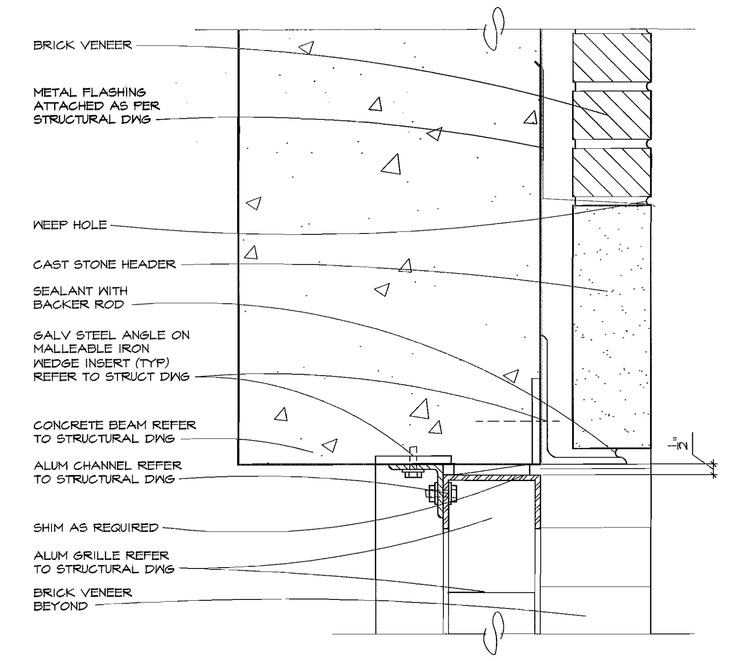

6 ALUM GRILLE DETAIL @ HEADER

SCALE: 1 1/2"=1'-0"

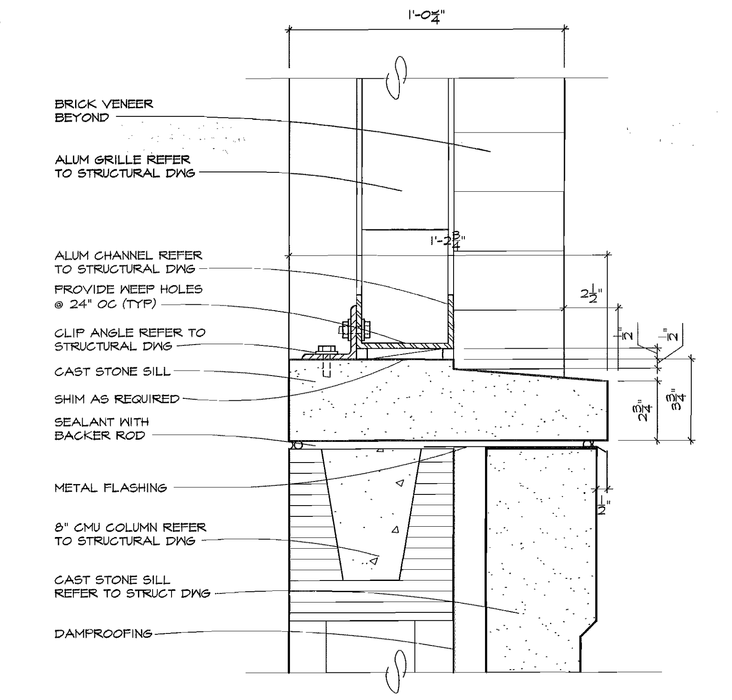

4 ALUM GRILLE DETAIL @ SILL

SCALE: 1 1/2"=1'-0"

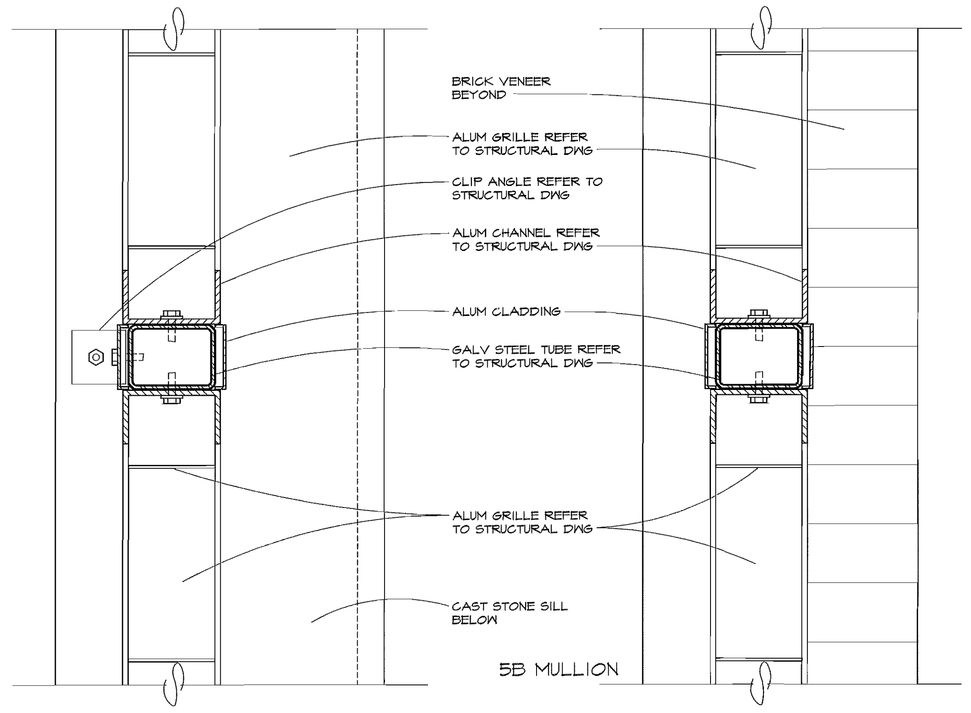

5 ALUM GRILLE DETAIL @ MULLION

SCALE: 1 1/2"=1'-0"

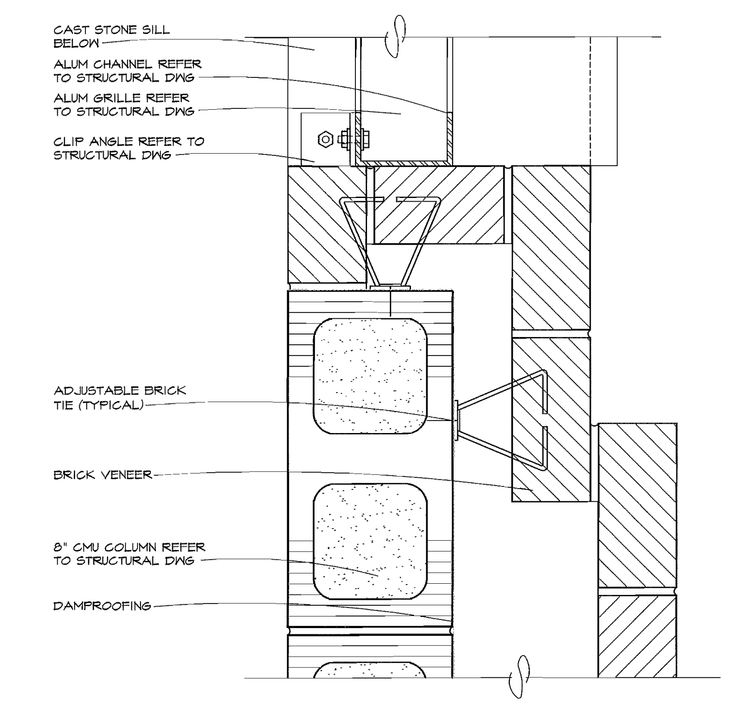

3 ALUM GRILLE DETAIL @ COLUMN

SCALE: 1 1/2"=1'-0"

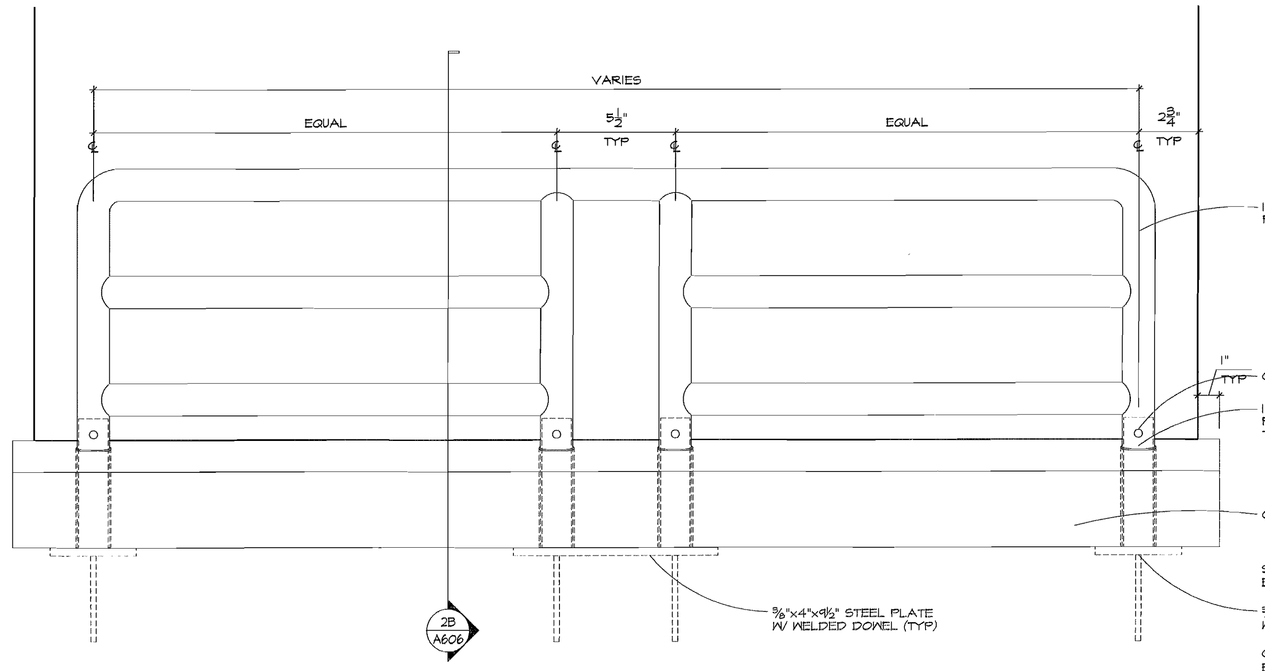

2A PARTIAL ELEVATION

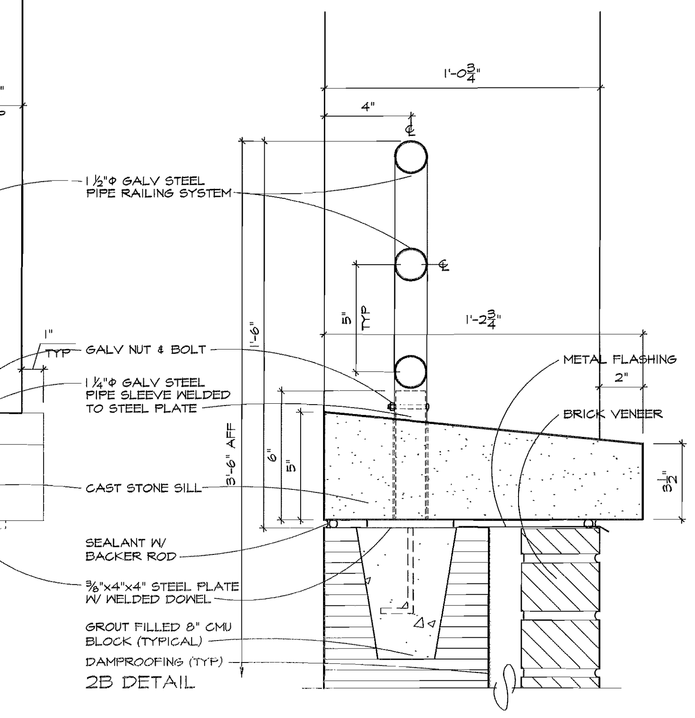

2B DETAIL

2 ENLARGED RAILING ELEVATION & DETAIL

SCALE: 3"=1'-0"

FINK, ROBERTS & PETRIE, INC.
Consulting Engineers
4040 Vincennes Circle, Suite 300
Indianapolis, Indiana 46268

Eddy Street Commons
Phase II
Parking Garage
Project Number 108-004

Owner
City of South Bend, Indiana

Construction Manager
Kite Realty Group
30 South Meridian Street, Suite 1100
Indianapolis, Indiana 46204
317-577-5600

Structural Engineer
Fink, Roberts & Petrie, Inc.
4040 Vincennes Circle, Suite 300
Indianapolis, Indiana 46268
317-872-8400

Architect
Looney Ricks Kiss
175 Toyota Plaza, Suite 600
Memphis, Tennessee 38103
901-521-1440

Mechanical, Electrical & Plumbing Engineer
Circle Design Group
5510 South East Street, Suite F
Indianapolis, Indiana 46227
317-781-6200

Parking Consultant
Walker Parking Consultants
6602 East 75th Street, Suite 210
Indianapolis, Indiana 46250
317-842-6890

Civil Engineer/Landscape Architect
The Troyer Group
550 Union Street
Mishawaka, Indiana 46554
574-259-9976

100% Construction Documents
January 23, 2008

PAUL CAMERON ROBERTS
REGISTERED
No. 10500056
STATE OF
INDIANA
1-25-08

ISSUE DATE	01/23/08
ISSUE PROJECT NO.	07097
ISSUE DRAWN BY	LEE
ISSUE CHECKED BY	MV

ISSUE NO.

ISSUE TITLE
ENLARGED GRILLE AND RAILING PLANS, ELEVATIONS, SECTIONS AND DETAILS

SHEET NO.
A606

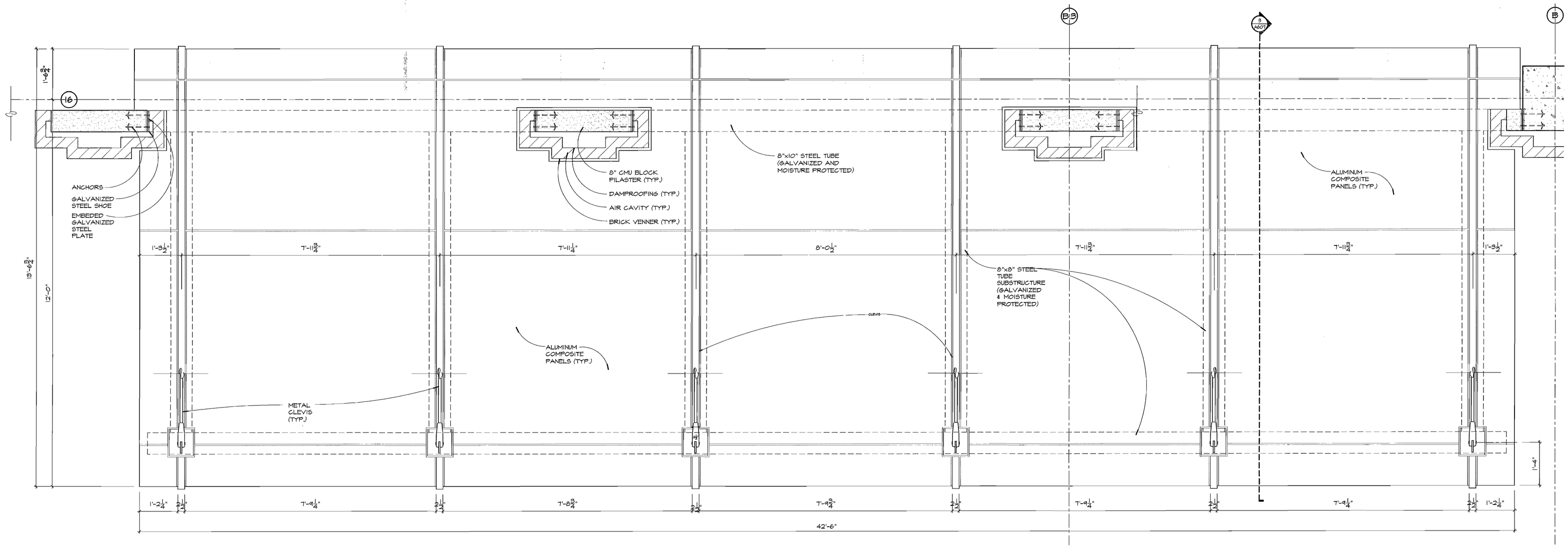

1 GARAGE ENTRANCE CANOPY PLAN

SCALE: 3/4"=1'-0"

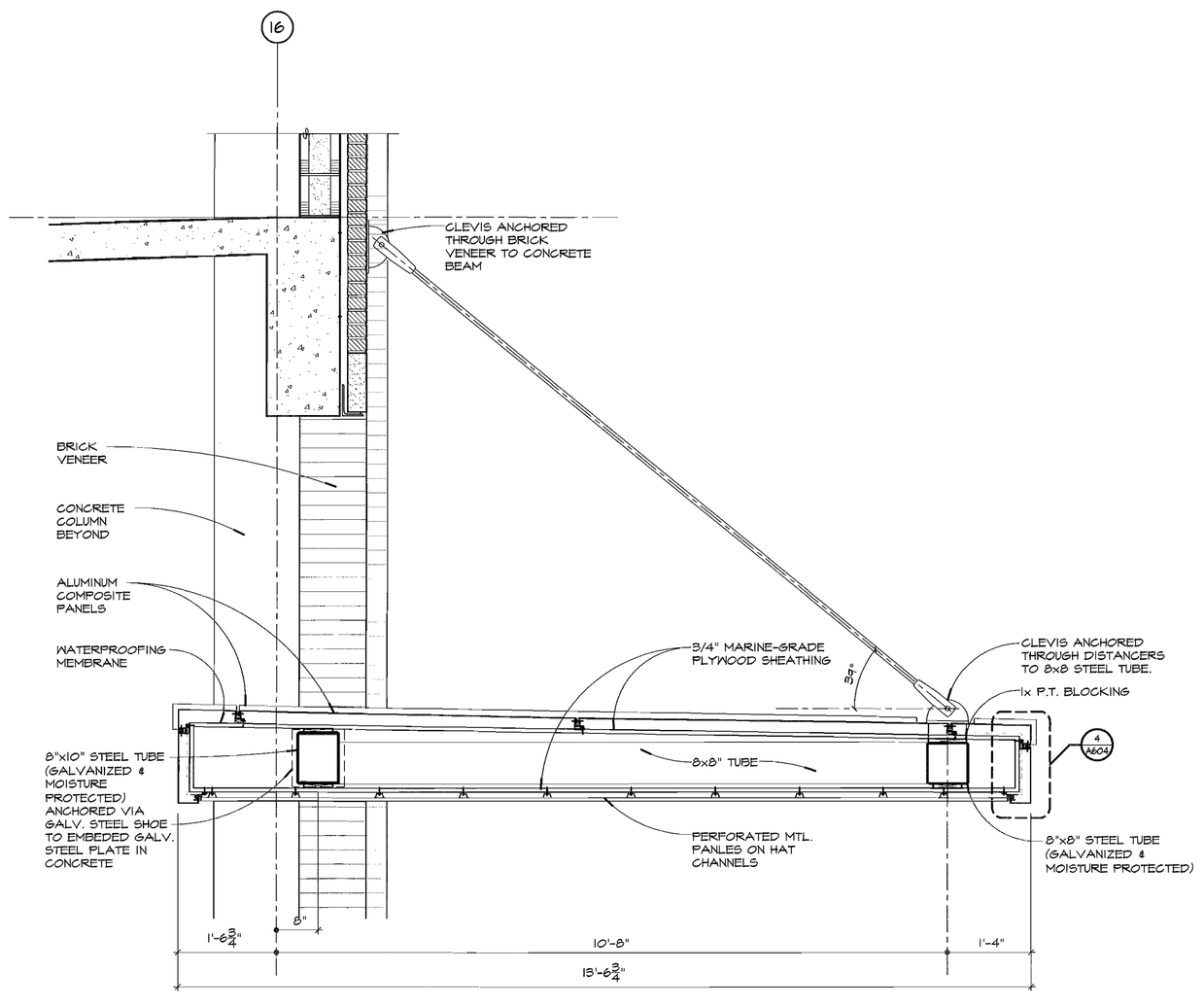

3 CANOPY SECTION

SCALE: 3/4"=1'-0"

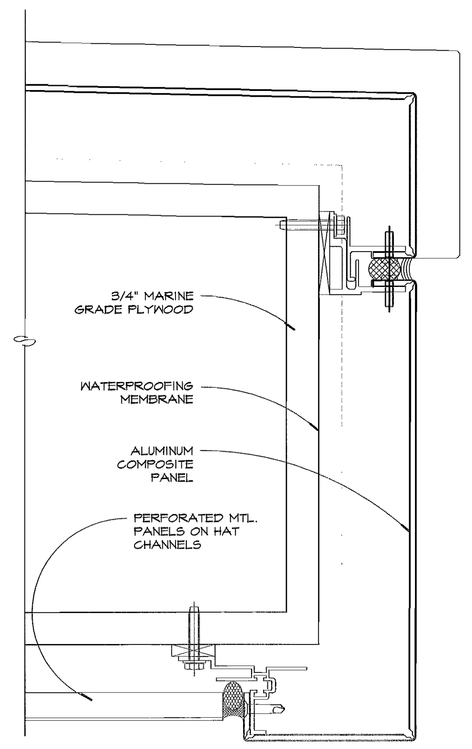

4 DETAIL

SCALE: 6" = 1'-0"

ACAD

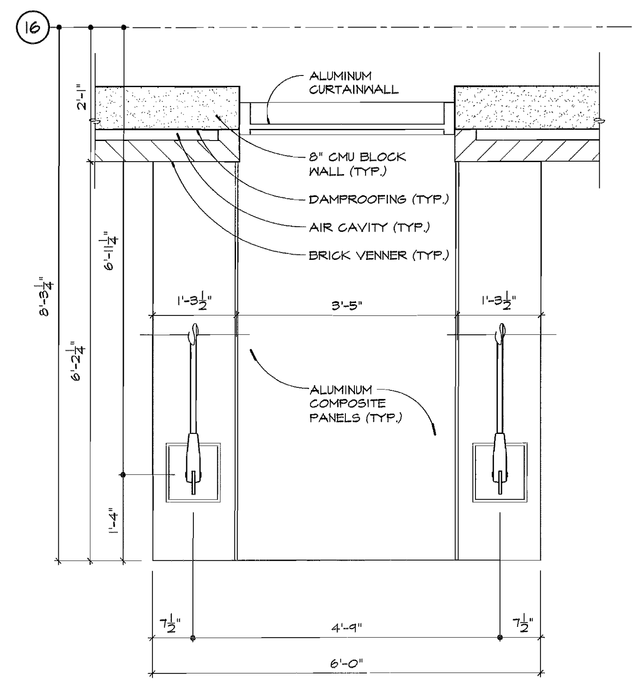

5 TOWER ENTRANCE CANOPY PLAN

SCALE: 1 1/2" = 1'-0"

ACAD

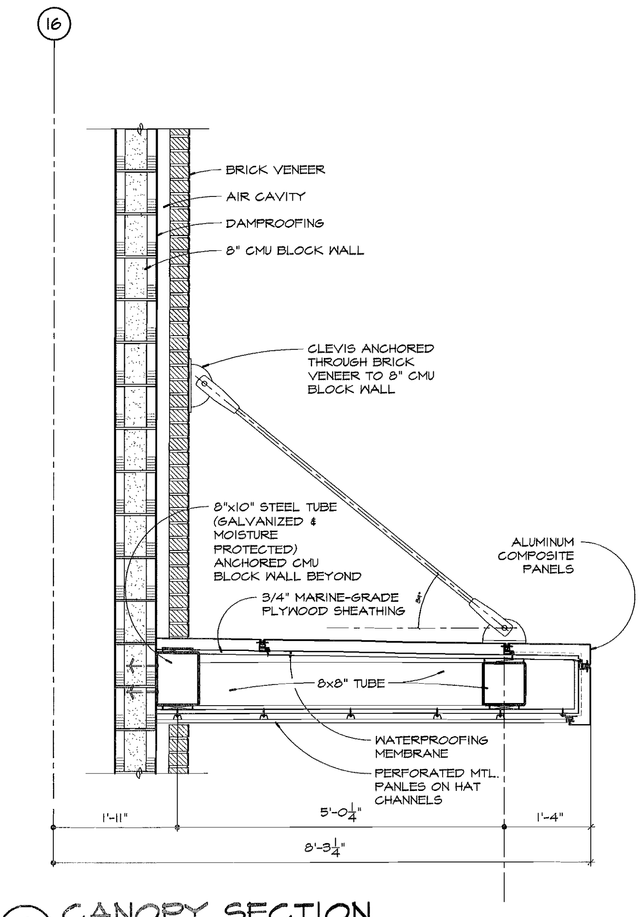

6 CANOPY SECTION

SCALE: 1 1/2" = 1'-0"

ACAD

FINK ROBERTS & PETRIE, INC.
Consulting Engineers
4040 Vincennes Circle, Suite 300
Indianapolis, Indiana 46268

Eddy Street Commons
Phase II
Parking Garage
Project Number 108-004

Owner
City of South Bend, Indiana

Construction Manager
Kite Realty Group
30 South Meridian Street, Suite 1100
Indianapolis, Indiana 46204
317-577-5600

Structural Engineer
Fink, Roberts & Petrie, Inc.
4040 Vincennes Circle, Suite 300
Indianapolis, Indiana 46268
317-872-8400

Architect
Looney Ricks Kiss
175 Toyota Plaza, Suite 600
Memphis, Tennessee 38103
901-521-1440

Mechanical, Electrical & Plumbing Engineer
Circle Design Group
5510 South East Street, Suite F
Indianapolis, Indiana 46227
317-781-6200

Parking Consultant
Walker Parking Consultants
6002 East 75th Street, Suite 210
Indianapolis, Indiana 46250
317-842-6890

Civil Engineer/Landscape Architect
The Troyer Group
550 Union Street
Mishawaka, Indiana 46554
574-259-9976

100% Construction Documents
January 23, 2008

CAMERON R. ODOR
REGISTERED
No. 10500056
STATE OF
INDIANA
1-23-08

ISSUE DATE	ISSUE DESCRIPTION	DRAWN BY	CHECKED BY
01/23/08	100% CONSTRUCTION DOCUMENTS	WV	AM

CANOPY PLANS, SECTIONS AND DETAILS

SHEET NO.

A607

Eddy Street Commons Parking Garage
100% Design Intent Drawings

Bid Tabulation
January 23, 2008 • 02.07007.09

Sign Name	Sign Number	Qty.	Comments
Suspended Bang Bar	PK.BB.1	3	Brushed Aluminum with applied letters
Suspended Wayfinding	PK.WF.1	1	Brushed Aluminum with Reflective Vinyls
Applied Wayfinding	PK.WF.2	68	Brushed Aluminum with Reflective Vinyls
Painted Wayfinding - Columns	PK.WF.3	78	4 Sides of columns painted with cog and level number
Painted Wayfinding	PK.WF.4	15	Cog and text painted near stairs
Site Regulatory - Code Required	PK.CD.1	9	Acrylic face with tactile information
Site Regulatory - Stair Exterior Identification	PK.CD.2	20	Acrylic face with tactile information
Site Regulatory - Stair Interior Identification	PK.CD.3	20	Acrylic face with tactile information - Copy Pending Fire Department Approval
Handicapped Parking Sign	PK.CD.4		ADA Compliant 18-gauge baked enamel steel 2 - .25" mounting holes, centered 1" from top and bottom Pole Mounted
Van Accessible Handicapped Parking Sign	PK.CD.5		ADA Compliant 18-gauge baked enamel steel 2 - .25" mounting holes, centered 1" from top and bottom Pole Mounted underneath PK.CD.4

Eddy Street Commons Parking Garage
100% Design Intent Drawings

Color and Finishes
January 23, 2008 • 02.07007.09

Paint		
P1	Matthews Paint: 11006 (Green)	Satin
P2	Matthews Paint: 20051(Silver)	Satin
P3	Matthews Paint: 20153 (Bronze)	Satin
Material		
M1	Aluminum	Brushed
M2	Aluminum	
M3	Adjustable Chain	
M4	Acrylic	
Vinyl		
V1	3M Scotchlite White 480-10	

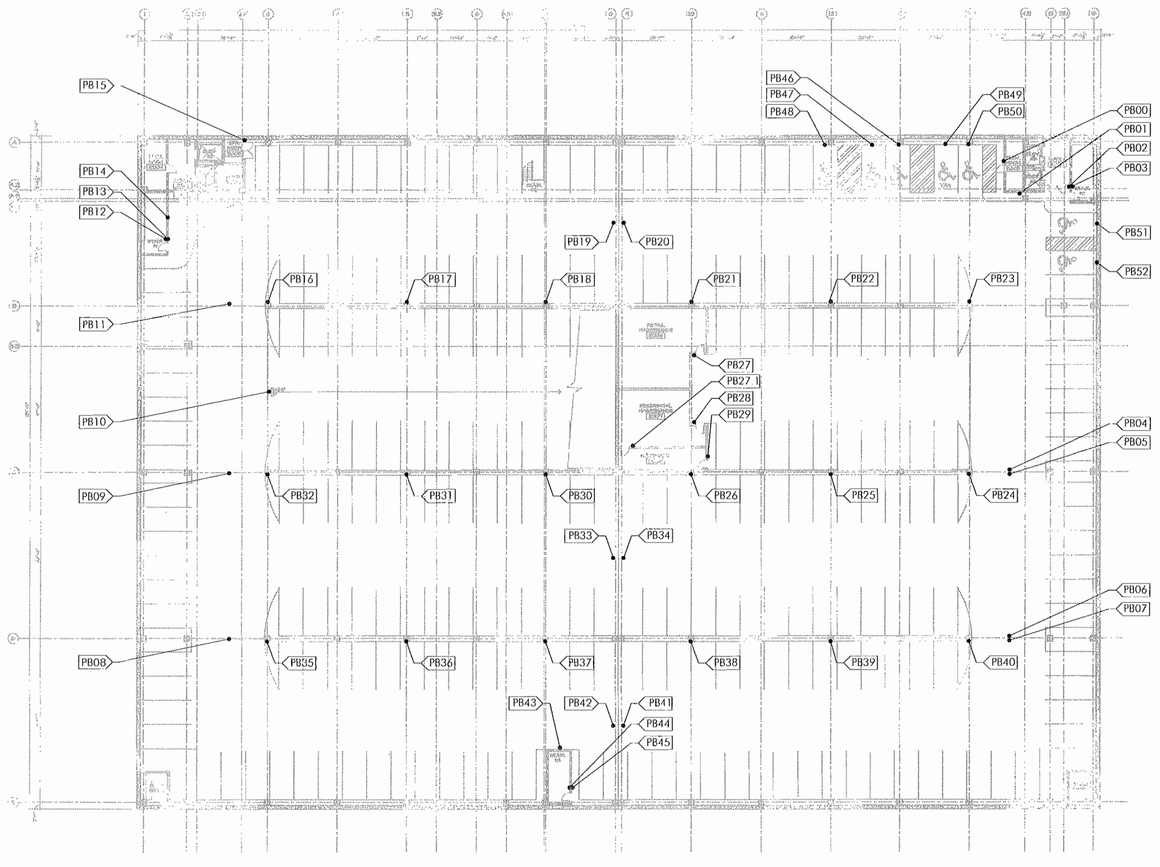

1 Basement Level
Scale: 1/32" = 1'

GENERAL NOTES FOR FABRICATION AND INSTALLATION OF THIS PROJECT

1. The Signage Contractor is the entity who is responsible for the completed signage products described by these documents including but not limited to Fabrication and Installation. The General Contractor is the entity responsible for the Eddu Street Commons Parking Garage Construction Project.

2. The Signage Contractor is responsible for the structural and electrical engineering design of the signage and supporting structure to comply with the graphic design described by these documents. The Signage Contractor shall submit structural and electrical engineering shop drawings signed and sealed by Professional Engineers registered in Project State for the respective disciplines.

3. The intent of the Contract Documents is to include all items necessary for the proper execution and completion of the Work by the Signage Contractor in accordance with the highest standards of trade practice. The Contract Documents are complementary, and what is required by one shall be as binding as if required by all.

4. Since the Contract Documents are complementary, before starting each portion of the Work, the Signage Contractor shall carefully study and compare the various Drawings and other Contract Documents relative to that portion of the work, as well as the information furnished by the Owner (including existing and proposed conditions). The Signage Contractor shall take field measurements of any existing conditions related to that portion of the Work and shall observe any conditions at the site affecting it. Also, the Signage Contractor is responsible for reviewing these document for compliance with all building and zoning regulations. Theses obligations are for the purpose of facilitating construction by the Signage Contractor and are not for the purpose of discovering errors, omissions or inconsistencies in the Contract Documents; however, any errors, omissions or inconsistencies discovered by the Signage Contractor shall be reported promptly to the Architect as a request for information in such form as the Architect may require. Any design errors or omissions noted by the Signage Contractor during this review shall be reported promptly to the Architect. If the Signage Contractor fails to perform the review of the existing conditions and the coordination of the Construction Documents, the Signage Contractor shall pay such costs and damages to the Owner as would have been avoided if the Signage Contractor had performed these obligations.

5. The Signage Contractor shall be responsible to the Owner for acts and omissions of the Signage Contractor's employees, Subcontractors and their agents and employees, and other persons or entities performing portions of the Work for or on behalf of the Signage Contractor or any of its Subcontractors.

6. The Signage Contractor may make substitutions only with the consent of the Owner, after evaluation by the Architect and in accordance with a Change Order.

7. The Signage Contractor warrants to the Owner and Architect that materials and equipment furnished under the Contract will be of good quality and new unless otherwise required or permitted by the Contract Documents, that the Work will be free from defects not inherent in the quality required or permitted, and that the Work will conform to the requirements of the Contract Documents. Work not conforming to these requirements, including substitutions not properly approved and authorized, may be considered defective. The Signage Contractor's warranty excludes remedy for damage or defect caused by abuse, modifications not executed by the Signage Contractor, improper or insufficient maintenance, or normal wear and tear and normal usage. If Required by the Architect, the Signage Contractor shall furnish satisfactory evidence as to the kind and quality of materials and equipment. In addition, the Signage Contractor shall warrantee to the Owner to replace or repair any portion of the Work that fails to conform with the requirements of the Construction Documents within a one (1) year period from date of final acceptance of the Work.

8. Unless otherwise provided in the Contract Documents, the Signage Contractor shall secure and pay for the building permit and other permits and governmental fees, licenses and inspections necessary for proper execution and completion of the Work which are customarily secured after execution of the Contract and which are legally required when bids are received or negotiations concluded. The Signage Contractor shall comply with and give notices required by laws, ordinances, rules, regulations and lawful orders of public authorities applicable to performance of the work.

9. The Signage Contractor shall comply with and give notices required by laws, ordinances, rules, regulations and lawful orders of public authorities applicable to performance of the Work.

10. The Signage Contractor shall employ a competent superintendent and necessary assistants who shall be in attendance at the Project site during performance of the Work. The superintendent shall represent the Signage Contractor, and communications given to the superintendent shall be as binding as if given to the Signage Contractor. Important communications shall be confirmed in writing. Other communications shall be similarly confirmed on written request in each case.

11. The Signage Contractor, promptly after being awarded the Contract, shall prepare and submit for the Owner's and Architect's information a construction schedule of the Work. The schedule shall not exceed time limits current under the Contract Documents, shall be revised at appropriate intervals as required by the conditions of the Work and the Project, shall be related to the entire Project to the extent required by the Contract Documents, and shall provide for expeditious and practical execution of the Work. The Signage Contractor shall prepare and keep current, of the Architect's approval, a schedule of submittals which is coordinated with the Signage Contractor's construction schedule and allows the Architect reasonable time to review submittals. The Signage Contractor shall perform the Work in general accordance with the most recent schedules submitted to the Owner and Architect.

12. The Signage Contractor shall perform no portion of the Work unless Shop Drawings, Product Data, Samples or similar submittals have been reviewed by the Architect and accepted for inclusion in the Work. Graphic artwork shall be provided by the Architect to the Signage Contractor via computer disk, email or FTP site to facilitate the production of the Shop Drawing submittals. The Signage Contractor shall notify the Architect of any discrepancies in the submittal documents immediately and shall not proceed or allow any work in those areas until discrepancies are resolved.

13. The Work shall be in accordance with approved submittals except that the Signage Contractor shall not be relieved of responsibility for deviations from requirements of the Contract Documents by the Architect's approval of Shop Drawings, Product Data, Samples or similar submittals unless the Contractor has specifically informed the Architect in writing of such deviation at the time of submittal and (1) the Architect has given written approval to the specific deviation as a minor change in the Work, or (2) a Change Order of Construction Change Directive has been issued authorizing the deviation. The Signage Contractor shall not be relieved of responsibility for error or omissions in Shop Drawings, Product Data, Samples or similar submittals by the Architect's acceptance thereof.

14. The Signage Contractor shall be responsible for cutting, fitting or patching required to complete the Work or to make its parts fit together properly. The Signage Contractor shall not damage or endanger a portion of the Work or fully or partially completed construciton of the Owner or separate contractors by cutting, patching or otherwise altering such construction, or by excavation. The Signage Contractor shall not cut or otherwise alter such construciton by the Owner or a separate contractor except with written consent of the Owner and of such separate contractor; such consent shall not be unreasonably withheld. The Signage Contractor shall not unreasonably withhold from the Owner or a separate contractor the Contractor's consent to cutting or otherwise altering the Work.

15. The Signage Contractor shall keep the premises and surrounding area free from accumulation of waste materials or rubbish caused by operations under the Contract. At completion of the Work, the Signage Contractor shall remove from and about the Project waste materials, rubbish, the Signage Contractor's tools, construction equipment, machinery and surplus materials. If the Signage Contractor fails to clean up as specified above, the Owner may do so and the cost thereof shall be charged to the Signage Contractor.

Drawings

1. Do not scale the drawings. All sign copy and graphics should be considered to be representative and are subject to change. Refer to final message schedule for final copy on all signs. Refer to location plans for final locations of all signs.

2. All dimensions are to the exterior face of the finished material unless otherwise noted. All elevations are noted from finish floor elevations.

3. All graphics and colors provided must conform to scale, specifications and PMS numbers where provided.

Materials and Fabrication

1. All materials shall be of new stock, free from defects impairing strength, durability, or appearance.

2. All aluminum fabrication shall be per the Contract Documents and all joints shall be welded, filled, ground, and sanded smooth prior to painting to ensure a uniform surface.

3. When dissimilar metals are in contact, the contacting surfaces shall be coated with asphaltic paint to prevent oxidation and electrolysis. Aluminum and steel are not to come in contact with each other.

4. Sign faces must be left clean and free of glue or other foreign material. Edges are to be routed smooth and straight.

5. All corners shall be 90° with crisp, clean edges.

6. All interior finish and trim materials are to meet Class III flame spread ratings of 76 to 200, or per applicable code.

Painting and Finishing

1. All aluminum materials shall be thoroughly sanded to remove oxidation and primed prior to painting and anodizing process. In the case of painting the aluminum, this is done to ensure maximum paint adhesion.

2. Primer coats or other surface pretreatment, where recommended by the manufacturer for paints, shall be included as part of the finished surface work at no extra cost to the owner.

3. All paints shall be evenly applied without pinholes, scratches, orange-peeling, application marks and other imperfections. Workmanship, finishes and formation of letters shall conform to the highest standards of the trade.

4. All baselines shall be horizontal on the sign face. Margins must be maintained as specified in the drawings.

5. Anchoring devices are to be adequate types of non-corrosive materials for securing signs to in-place structures.

Installation

1. Signage Contractor to supply General Contractor with mounting/structural requirements for all exterior signage. All structure installed by General Contractor in preparation for signage installation will be paid for by General Contractor. All connections from sign to structure to be paid for by Signage Contractor and designed by a licensed structural engineer.

2. All installations are to be level and plumb or will be deemed unacceptable.

3. Immediately after fabrication, Signage Contractor shall touch-up paint all field welds, bolted connections and abased areas of shop paint. If marred areas cannot be adequately touched up on site, the sign(s) will be returned to the shop for controlled refinishing.

6. The Signage Contractor shall provide and install adequate blocking for all wall hung and wall supported items except for those items which are hung from items not in contract.

8. All hangers, channels, rods and other misc. support steel shall be installed by the Signage Contractor as necessary for the support of suspended equipment (signage) and shall be fastened to the existing structure in such a manner as to not compromise its existing structural integrity or fire rating.

11. The Signage Contractor shall provide all engineering required for exterior signage guaranteed for local conditions and codes.

Qualifiers

1. All design arrangements or plans indicated or represented by these drawings are instruments of service of LRK, and remain the sole property of LRK.

2. No ideas, designs, arrangements, or plans shall be disclosed to any other person, firm, or corporation for any purpose whatsoever without the express written consent of LRK.

3. All Artwork and Drawings are not to be reproduced or circulated for use outside the scope of this contract without written consent of LRK.

Eddy Street Commons Parking Garage
100% Design Intent Drawings

Basement Level Message Schedule
January 23, 2008 • 02.07007.09

Location Number	Sign Type	Message	Power Requested	Double Sided
PB00	PK.CD.1	ELEVATOR/MACHINERY (g2b)		
PB01	PK.WF.4	STAIR TO HOTEL B		
PB02	PK.CD.2	STAIR 2 (g2b)		
PB03	PK.CD.3	STAIR 2 B B LEVEL (g2b) BASEMENT LEVEL TO ROOF ROOF ACCESS UP TO FIRST FLOOR FOR EXIT DISCHARGE **PENDING FIRE DEPARTMENT APROVAL**		
PB04	PK.WF.2	EXIT (up arrow)		
PB05	PK.WF.2	STAIR TO HOTEL (up arrow)		
PB06	PK.WF.2	EXIT (right arrow)		
PB07	PK.WF.2	STAIR TO HOTEL (up arrow)		
PB08	PK.WF.2	STAIR TO EDDY STREET (up arrow)		
PB09	PK.WF.2	EXIT (right arrow)		
PB10	PK.WF.2	HOTEL PARKING		
PB11	PK.WF.2	EXIT (left arrow)		
PB12	PK.CD.3	STAIR 1 B B LEVEL (g2b) BASEMENT LEVEL TO ROOF ROOF ACCESS UP TO FIRST FLOOR FOR EXIT DISCHARGE **PENDING FIRE DEPARTMENT APROVAL**		
PB13	PK.CD.2	STAIR 1 (g2b)		
PB14	PK.WF.4	STAIR TO EDDY STREET B		
PB15	PK.CD.1	SPRINKLER (g2b)		
PB16	PK.WF.3	B		
PB17	PK.WF.3	B		
PB18	PK.WF.3	B		
PB19	PK.WF.2	STAIR TO HOTEL (up arrow)		
PB20	PK.WF.2	STAIR TO EDDY STREET (up arrow)		
PB21	PK.WF.3	B		
PB22	PK.WF.3	B		
PB23	PK.WF.3	B		
PB24	PK.WF.3	B		
PB25	PK.WF.3	B		
PB26	PK.WF.3	B		
PB27	PK.CD.1	RESIDENTIAL MAINTENANCE (G2b)		
PB27.1	PK.CD.1	ELECTRICAL (g2b)		
PB28	PK.CD.1	RETAIL MAINTENANCE (g2b)		
PB29	PK.CD.1	ELECTRICAL (g2b)		
PB30	PK.WF.3	B		
PB31	PK.WF.3	B		
PB32	PK.WF.3	B		
PB33	PK.WF.2	STAIR TO HOTEL (up arrow)		
PB34	PK.WF.2	STAIR TO NAPOLEON STREET (left arrow) STAIR TO EDDY STREET (right arrow)		
PB35	PK.WF.3	B		
PB36	PK.WF.3	B		
PB37	PK.WF.3	B		
PB38	PK.WF.3	B		
PB39	PK.WF.3	B		
PB40	PK.WF.3	B		
PB41	PK.WF.2	STAIR TO NAPOLEON STREET (left arrow) STAIR TO EDDY STREET (right arrow)		
PB42	PK.WF.2	STAIR TO HOTEL (up arrow)		
PB43	PK.WF.4	STAIR TO NAPOLEON STREET B		
PB44	PK.CD.3	STAIR 3 B B LEVEL (g2b) BASEMENT LEVEL TO ROOF ROOF ACCESS UP TO FIRST FLOOR FOR EXIT DISCHARGE **PENDING FIRE DEPARTMENT APROVAL**		
PB45	PK.CD.2	STAIR 3 (g2b)		
PB46	PK.CD.5	DISABLED PARKING ONLY VAN ACCESSIBLE		
PB47	PK.CD.5	DISABLED PARKING ONLY VAN ACCESSIBLE		
PB48	PK.CD.5	DISABLED PARKING ONLY VAN ACCESSIBLE		
PB49	PK.CD.5	DISABLED PARKING ONLY VAN ACCESSIBLE		
PB50	PK.CD.4	DISABLED PARKING ONLY		
PB51	PK.CD.4	DISABLED PARKING ONLY		
PB52	PK.CD.4	DISABLED PARKING ONLY		

DESIGN INTENT ONLY
FABRICATOR MUST SUBMIT SHOP DRAWINGS FOR REVIEW PRIOR TO FABRICATION

FINK ROBERTS & PETRIE INC.
Consulting Engineers
4040 Vincennes Circle, Suite 300
Indianapolis, Indiana 46268

Eddy Street Commons
Phase II
Parking Garage
Project Number 108-004

Owner
City of South Bend, Indiana

Construction Manager
Kite Realty Group
30 South Meridian Street, Suite 1100
Indianapolis, Indiana 46204
317-577-5600

Structural Engineer
Fink, Roberts & Petrie, Inc.
4040 Vincennes Circle, Suite 300
Indianapolis, Indiana 46268
317-872-8400

Architect
Looney Ricks Kiss
175 Toyota Plaza, Suite 600
Memphis, Tennessee 38103
901-521-1440

Mechanical, Electrical & Plumbing Engineer
Circle Design Group
5510 South East Street, Suite F
Indianapolis, Indiana 46227
317-781-6200

Parking Consultant
Walker Parking Consultants
6602 East 75th Street, Suite 210
Indianapolis, Indiana 46250
317-842-6800

Civil Engineer/Landscape Architect
The Troyer Group
550 Union Street
Mishawaka, Indiana 46554
574-259-9976

100% Construction Documents
January 23, 2008

ISSUED BY
REGISTERED
No. 10500056
STATE OF
INDIANA
ARCHITECT
1-23-08

ISSUE DATE
ISSUE PROJECT NO.
ISSUE ISSUED BY
CHECKED BY

ISSUE TITLE
BID TABULATION
COLOR AND FINISH SCHEDULE
BASEMENT LEVEL: LOCATION PLAN
MESSAGE SCHEDULE

ISSUE NO.
A801

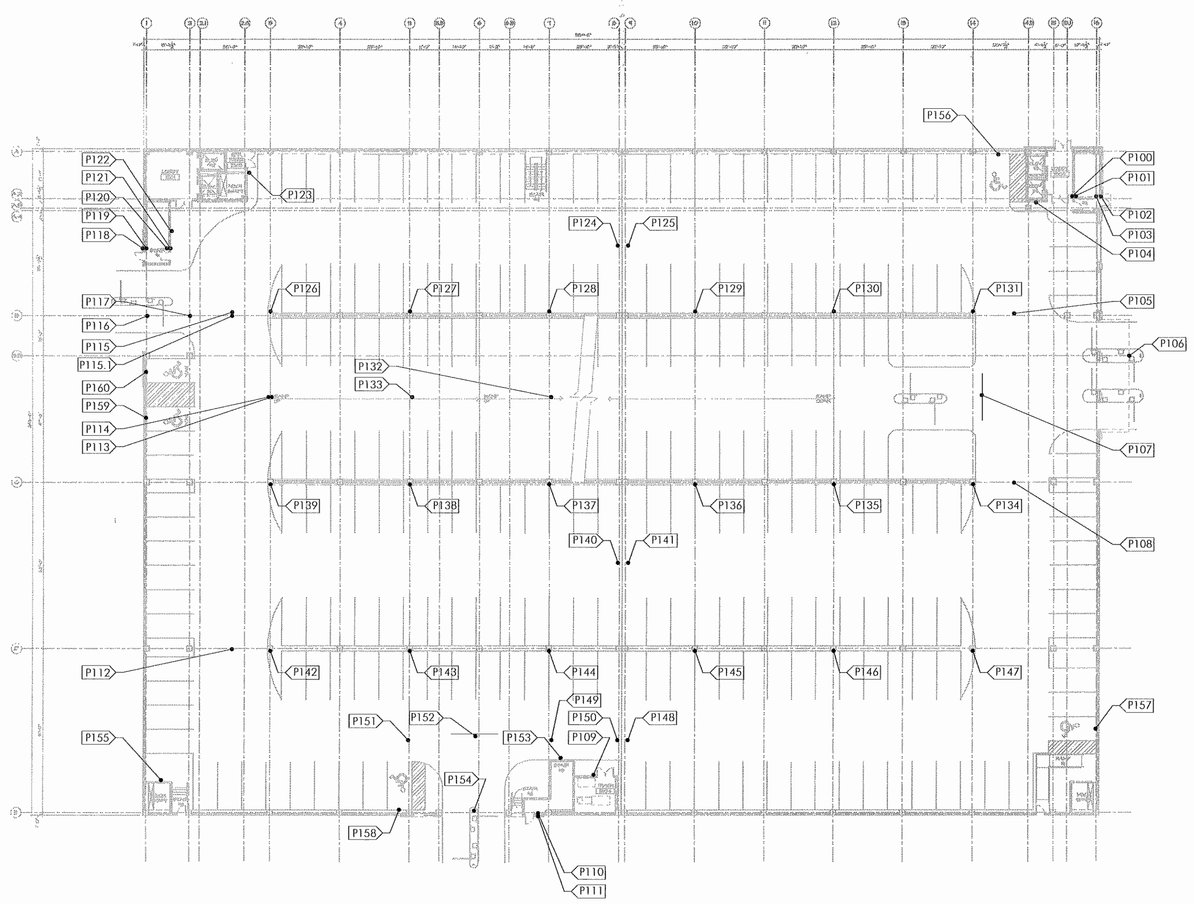

2 Ground Level
Scale: 1/32" = 1'

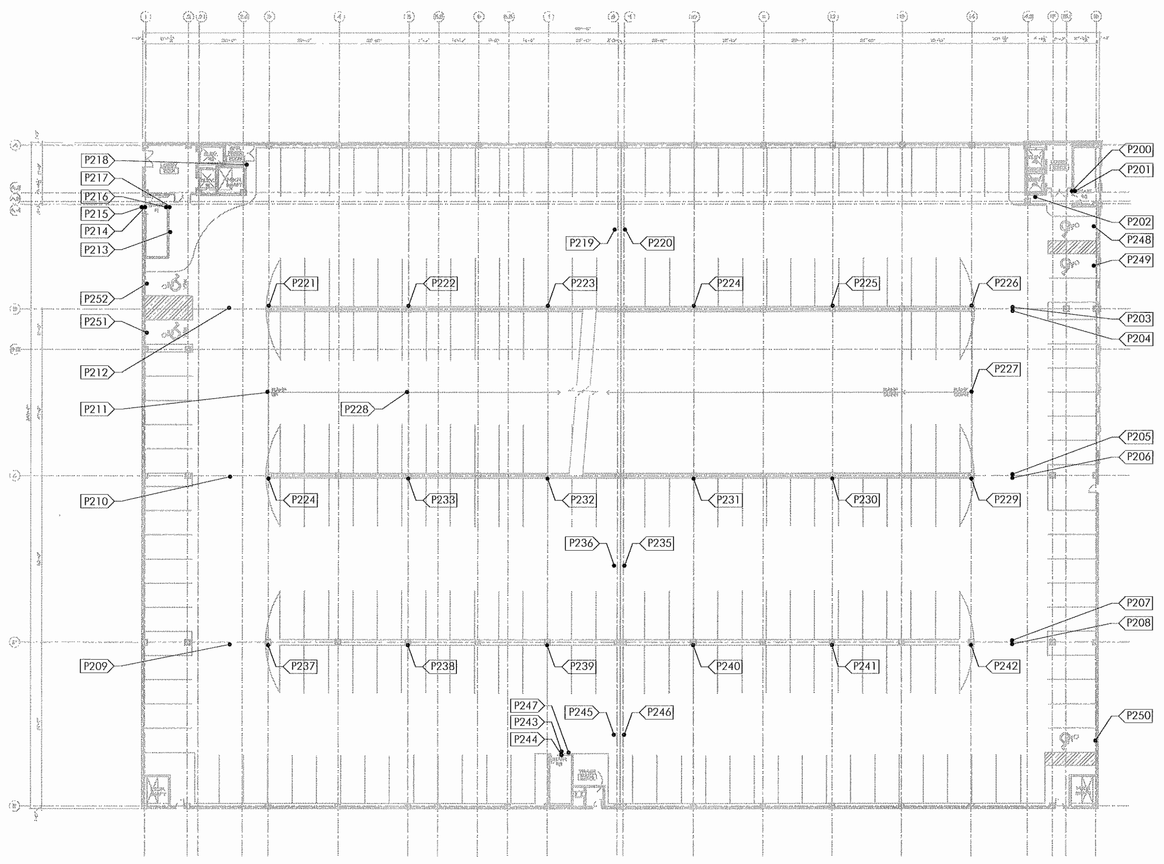

1 Second Level
Scale: 1/32" = 1'

Eddy Street Commons Parking Garage
100% Design Intent Drawings

Ground Level Message Schedule
January 24, 2008 • 02.07007.09

Location Number	Sign Type	Message	Power Requested	Double Sided
P100	PK.CD.2	STAIR 2 (g2b)		
P101	PK.CD.3	STAIR 2 G GROUND LEVEL (g2b) BASEMENT LEVEL TO ROOF ROOF ACCESS EXIT DISCHARGE THIS FLOOR **PENDING FIRE DEPARTMENT APROVAL**		
P102	PK.CD.2	STAIR 2 (g2b)		
P103	PK.CD.3	STAIR 2 G GROUND LEVEL (g2b) BASEMENT LEVEL TO ROOF ROOF ACCESS EXIT DISCHARGE THIS FLOOR **PENDING FIRE DEPARTMENT APROVAL**		
P104	PK.WF.4	STAIR TO HOTEL G		
P105	PK.WF.2	EXIT (left arrow)		
P106	PK.BB.1	CLEARANCE 8'-0"		
P107	PK.WF.2	HOTEL PARKING - BASEMENT LEVEL (down arrow)		
P108	PK.WF.2	EXIT (right arrow)		
P109	PK.CD.1	TRASH (g2b)		
P110	PK.CD.3	STAIR 3 G GROUND LEVEL (g2b) BASEMENT LEVEL TO ROOF ROOF ACCESS EXIT DISCHARGE THIS FLOOR **PENDING FIRE DEPARTMENT APROVAL**		
P111	PK.CD.2	STAIR 3 (g2b)		
P112	PK.WF.2	STAIR TO EDDY STREET (up arrow)		
P113	PK.WF.2	RESIDENTIAL AND OFFICE PARKING (up arrow)		
P114	PK.WF.2	(left arrow) EXIT (right arrow)		
P115	PK.WF.2	EXIT (right arrow)		
P115.1	PK.WF.2	EXIT (left arrow)		
P116	PK.BB.1	CLEARANCE 8'-0"		
P117	PK.WF.2	GROUND FLOOR - RETAIL PARKING		
P118	PK.CD.2	STAIR 1 (g2b)		
P119	PK.CD.3	STAIR 1 G GROUND LEVEL (g2b) BASEMENT LEVEL TO ROOF ROOF ACCESS EXIT DISCHARGE THIS FLOOR **PENDING FIRE DEPARTMENT APROVAL**		
P120	PK.CD.3	STAIR 1 G GROUND LEVEL (g2b) BASEMENT LEVEL TO ROOF ROOF ACCESS EXIT DISCHARGE THIS FLOOR **PENDING FIRE DEPARTMENT APROVAL**		
P121	PK.CD.2	STAIR 1 (g2b)		
P122	PK.WF.4	STAIR TO EDDY STREET G		
P123	PK.CD.1	SPRINKER (g2b)		
P124	PK.WF.2	STAIR TO HOTEL (up arrow)		
P125	PK.WF.2	STAIR TO EDDY STREET (up arrow)		
P126	PK.WF.3	G		
P127	PK.WF.3	G		
P128	PK.WF.3	G		
P129	PK.WF.3	G		
P130	PK.WF.3	G		
P131	PK.WF.3	G		
P132	PK.WF.2	PROCEED TO 4TH LEVEL FOR OFFICE PARKING		
P133	PK.WF.2	PROCEED TO 2ND AND 3RD LEVELS FOR RESIDENTIAL PARKING		
P134	PK.WF.3	G		
P135	PK.WF.3	G		
P136	PK.WF.3	G		
P137	PK.WF.3	G		
P138	PK.WF.3	G		
P139	PK.WF.3	G		
P140	PK.WF.2	STAIR TO HOTEL (up arrow)		
P141	PK.WF.2	STAIR TO NAPOLEON STREET (left arrow) STAIR TO EDDY STREET (right arrow)		
P142	PK.WF.3	G		
P143	PK.WF.3	G		
P144	PK.WF.3	G		
P145	PK.WF.3	G		
P146	PK.WF.3	G		
P147	PK.WF.3	G		
P148	PK.WF.2	STAIR TO NAPOLEON STREET (left arrow) STAIR TO EDDY STREET (right arrow)		
P149	PK.WF.2	EXIT (left arrow)		
P150	PK.WF.2	STAIR TO HOTEL (uo arrow)		
P151	PK.WF.2	EXIT (right arrow)		
P152	PK.WF.1	RAMP TO HOTEL PARKING (right arrow) RAMP TO RESIDENTIAL PARKING (left arrow)		
P153	PK.WF.4	STAIR TO NAPOLEON STREET G		
P154	PK.BB.1	CLEARANCE 8'-0"		
155	PK.WF.4	STAIR TO NAPOLEON STREET G		
156	PK.CD.4	DISABLED PARKING ONLY		
157	PK.CD.4	DISABLED PARKING ONLY		
158	PK.CD.4	DISABLED PARKING ONLY		
159	PK.CD.5	DISABLED PARKING ONLY VAN ACCESSIBLE		
160	PK.CD.5	DISABLED PARKING ONLY VAN ACCESSIBLE		

Eddy Street Commons Parking Garage
100% Design Intent Drawings

Second Level Message Schedule
January 24, 2008 • 02.07007.09

Location Number	Sign Type	Message	Power Requested	Double Sided
P200	PK.CD.2	STAIR 2 (g2b)		
P201	PK.CD.3	STAIR 2 2 2ND LEVEL (g2b) BASEMENT LEVEL TO ROOF ROOF ACCESS DOWN TO FIRST FLOOR FOR EXIT DISCHARGE **PENDING FIRE DEPARTMENT APROVAL**		
P202	PK.WF.4	STAIR TO HOTEL 2		
P203	PK.WF.2	EXIT (right arrow)		
P204	PK.WF.2	STAIR TO HOTEL (up arrow)		
P205	PK.WF.2	STAIR TO NAPOLEON STREET (up arrow)		
P206	PK.WF.2	STAIR TO HOTEL (up arrow)		
P207	PK.WF.2	STAIR TO NAPOLEON STREET (up arrow)		
P208	PK.WF.2	EXIT (left arrow)		
P209	PK.WF.2	STAIR TO EDDY STREET (up arrow)		
P210	PK.WF.2	RESIDENTIAL AND OFFICE PARKING (right arrow)		
P211	PK.WF.2	PROCEED TO 3RD LEVEL FOR RESIDENTIAL PARKING PROCEED TO 4TH LEVEL FOR OFFICE PARKING		
P212	PK.WF.2	RESIDENTIAL AND OFFICE PARKING (left arrow)		
P213	PK.WF.4	STAIR TO EDDY STREET 2		
P214	PK.CD.3	STAIR 1 2 2ND LEVEL (g2b) BASEMENT LEVEL TO ROOF ROOF ACCESS DOWN TO FIRST FLOOR FOR EXIT DISCHARGE **PENDING FIRE DEPARTMENT APROVAL**		
P215	PK.CD.2	STAIR 2 (g2b)		
P216	PK.CD.3	STAIR 1 2 2ND LEVEL (g2b) BASEMENT LEVEL TO ROOF ROOF ACCESS DOWN TO FIRST FLOOR FOR EXIT DISCHARGE **PENDING FIRE DEPARTMENT APROVAL**		
P217	PK.CD.2	STAIR 2 (g2b)		
P218	PK.CD.1	SPRINKER (g2b)		
P219	PK.WF.2	STAIR TO HOTEL (up arrow)		
P220	PK.WF.2	STAIR TO EDDY STREET (up arrow)		
P221	PK.WF.3	2		
P222	PK.WF.3	2		
P223	PK.WF.3	2		
P224	PK.WF.3	2		
P225	PK.WF.3	2		
P226	PK.WF.3	2		
P227	PK.WF.2	(right arrow) RESIDENTIAL PARKING (left arrow)		
P228	PK.WF.2	PROCEED TO 4TH LEVEL FOR OFFICE PARKING		
P229	PK.WF.3	2		
P230	PK.WF.3	2		
P231	PK.WF.3	2		
P232	PK.WF.3	2		
P233	PK.WF.3	2		
P234	PK.WF.3	2		
P235	PK.WF.2	STAIR TO NAPOLEON STREET (left arrow) STAIR TO EDDY STREET (right arrow)		
P236	PK.WF.2	STAIR TO HOTEL (up arrow)		
P237	PK.WF.3	2		
P238	PK.WF.3	2		
P239	PK.WF.3	2		
P240	PK.WF.3	2		
P241	PK.WF.3	2		
P242	PK.WF.3	2		
P243	PK.CD.2	STAIR 3 (g2b)		
P244	PK.CD.3	STAIR 3 2 2ND LEVEL (g2b) BASEMENT LEVEL TO ROOF ROOF ACCESS DOWN TO FIRST FLOOR FOR EXIT DISCHARGE **PENDING FIRE DEPARTMENT APROVAL**		
P245	PK.WF.2	STAIR TO HOTEL (up arrow)		
P246	PK.WF.2	STAIR TO NAPOLEON STREET (left arrow) STAIR TO EDDY STREET (right arrow)		
P247	PK.WF.4	STAIR TO NAPOLEON STREET 2		
P248	PK.CD.4	DISABLED PARKING ONLY		
P249	PK.CD.4	DISABLED PARKING ONLY		
P250	PK.CD.4	DISABLED PARKING ONLY		
P251	PK.CD.5	DISABLED PARKING ONLY VAN ACCESSIBLE		
P252	PK.CD.5	DISABLED PARKING ONLY VAN ACCESSIBLE		

DESIGN INTENT ONLY
FABRICATOR MUST SUBMIT SHOP DRAWINGS FOR REVIEW PRIOR TO FABRICATION

FINK ROBERTS & PETRIE, INC
Consulting Engineers
4040 Vincennes Circle Suite 300
Indianapolis, Indiana 46268

Eddy Street Commons
Phase II
Parking Garage
Project Number 108-004

Owner
City of South Bend, Indiana

Construction Manager
Kite Realty Group
30 South Meridian Street, Suite 1100
Indianapolis, Indiana 46204
317-577-5600

Structural Engineer
Fink, Roberts & Petrie, Inc.
4040 Vincennes Circle, Suite 300
Indianapolis, Indiana 46268
317-872-8400

Architect
Looney Ricks Kiss
175 Toyota Plaza, Suite 600
Memphis, Tennessee 38103
901-521-1440

Mechanical, Electrical & Plumbing Engineer
Circle Design Group
5510 South East Street, Suite F
Indianapolis, Indiana 46227
317-781-6200

Parking Consultant
Walker Parking Consultants
6602 East 75th Street, Suite 210
Indianapolis, Indiana 46250
317-842-6890

Civil Engineer/Landscape Architect
The Troyer Group
550 Union Street
Mishawaka, Indiana 46554
574-259-9976

100% Construction Documents
January 23, 2008

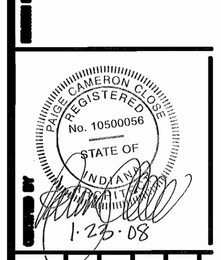

DRAWN BY
DESIGN DATE
DESIGN PROJECT NO.
DESIGN LEADER BY
CHECKED BY

GROUND LEVEL: LOCATION PLAN
MESSAGE SCHEDULE
SECOND LEVEL: LOCATION PLAN
MESSAGE SCHEDULE

SHEET NO.
A802

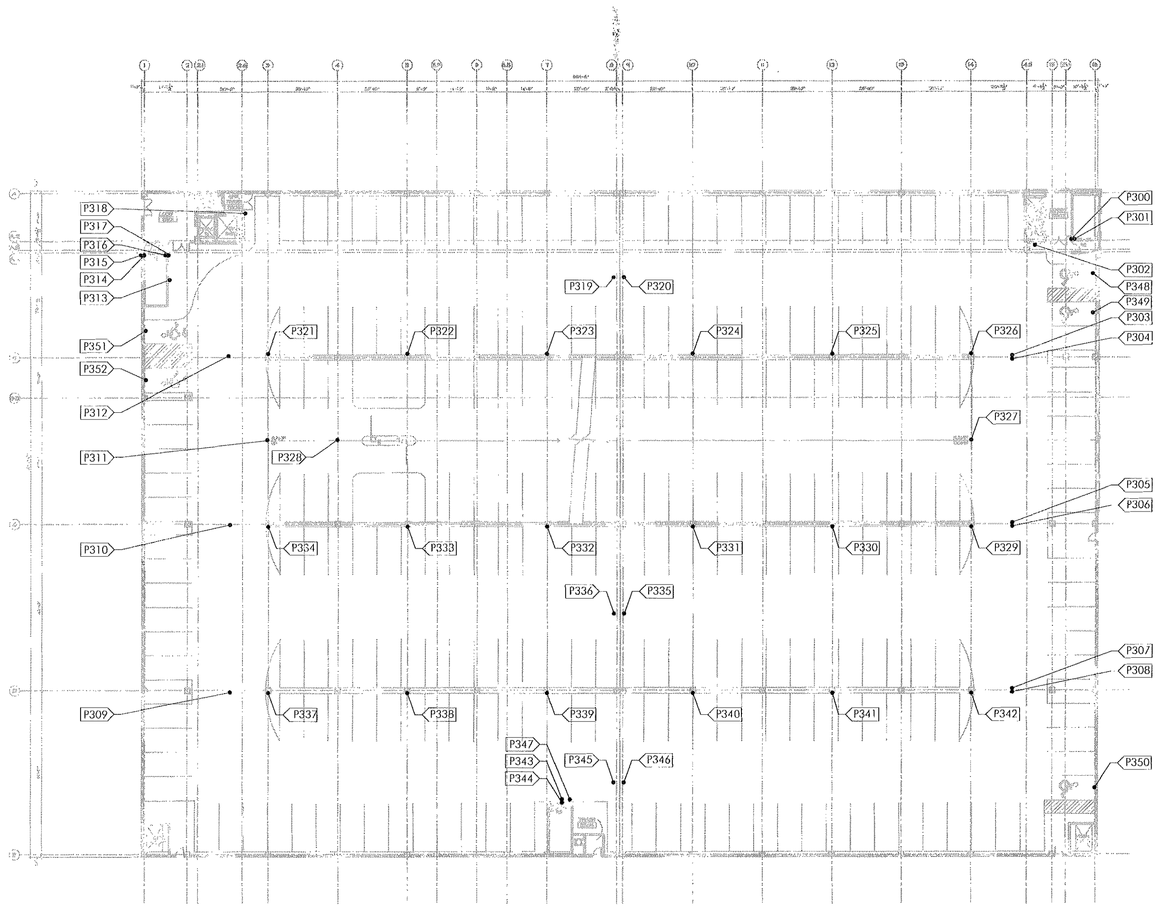

2 Third Level
Scale: 1/32" = 1'

Eddy Street Commons Parking Garage
100% Design Intent Drawings

Third Level Message Schedule
January 24, 2008 • 02.07007.09

Location Number	Sign Type	Message	Power Requested	Double Sided
P300	PK.CD.2	STAIR 2 (g2b)		
P301	PK.CD.3	STAIR 2 3 3RD LEVEL (g2b) BASEMENT LEVEL TO ROOF ROOF ACCESS DOWN TO FIRST FLOOR FOR EXIT DISCHARGE **PENDING FIRE DEPARTMENT APROVAL**		
P302	PK.WF.4	STAIR TO HOTEL 3		
P303	PK.WF.2	EXIT (right arrow)		
P304	PK.WF.2	STAIR TO HOTEL (up arrow)		
P305	PK.WF.2	STAIR TO NAPOLEON STREET (up arrow)		
P306	PK.WF.2	STAIR TO HOTEL (up arrow)		
P307	PK.WF.2	STAIR TO NAPOLEON STREET (up arrow)		
P308	PK.WF.2	EXIT (left arrow)		
P309	PK.WF.2	STAIR TO EDDY STREET (up arrow)		
P310	PK.WF.2	OFFICE PARKING (right arrow)		
P311	PK.WF.2	PROCEED TO 4TH LEVEL FOR OFFICE PARKING		
P312	PK.WF.2	OFFICE PARKING (left arrow)		
P313	PK.WF.4	STAIR TO EDDY STREET 3		
P314	PK.CD.3	STAIR 1 3 3RD LEVEL (g2b) BASEMENT LEVEL TO ROOF ROOF ACCESS DOWN TO FIRST FLOOR FOR EXIT DISCHARGE **PENDING FIRE DEPARTMENT APROVAL**		
P315	PK.CD.2	STAIR 2 (g2b)		
P316	PK.CD.3	STAIR 1 3 3RD LEVEL (g2b) BASEMENT LEVEL TO ROOF ROOF ACCESS DOWN TO FIRST FLOOR FOR EXIT DISCHARGE **PENDING FIRE DEPARTMENT APROVAL**		
P317	PK.CD.2	STAIR 2 (g2b)		
P318	PK.CD.1	SPRINKER (g2b)		
P319	PK.WF.2	STAIR TO HOTEL (up arrow)		
P320	PK.WF.2	STAIR TO EDDY STREET (up arrow)		
P321	PK.WF.3	2		
P322	PK.WF.3	2		
P323	PK.WF.3	2		
P324	PK.WF.3	2		
P325	PK.WF.3	2		

Location Number	Sign Type	Message	Power Requested	Double Sided
P326	PK.WF.3	2		
P327	PK.WF.2	(right arrow) RESIDENTIAL PARKING (left arrow)		
P238	PK.WF.2	PROCEED TO 4TH LEVEL FOR OFFICE PARKING		
P239	PK.WF.3	2		
P330	PK.WF.3	2		
P331	PK.WF.3	2		
P332	PK.WF.3	2		
P333	PK.WF.3	2		
P334	PK.WF.3	2		
P335	PK.WF.2	STAIR TO NAPOLEON STREET (left arrow) STAIR TO EDDY STREET (right arrow)		
P336	PK.WF.2	STAIR TO HOTEL (up arrow)		
P337	PK.WF.3	2		
P338	PK.WF.3	2		
P339	PK.WF.3	2		
P340	PK.WF.3	2		
P341	PK.WF.3	2		
P342	PK.WF.3	2		
P343	PK.CD.2	STAIR 3 (g2b)		
P344	PK.CD.3	STAIR 3 3 3RD LEVEL (g2b) BASEMENT LEVEL TO ROOF ROOF ACCESS DOWN TO FIRST FLOOR FOR EXIT DISCHARGE **PENDING FIRE DEPARTMENT APROVAL**		
P345	PK.WF.2	STAIR TO HOTEL (up arrow)		
P346	PK.WF.2	STAIR TO NAPOLEON STREET (left arrow) STAIR TO EDDY STREET (right arrow)		
P347	PK.WF.4	STAIR TO NAPOLEON STREET 3		
P348	PK.CD.4	DISABLED PARKING ONLY		
P349	PK.CD.4	DISABLED PARKING ONLY		
P350	PK.CD.4	DISABLED PARKING ONLY		
P351	PK.CD.5	DISABLED PARKING ONLY VAN ACCESSIBLE		
P352	PK.CD.5	DISABLED PARKING ONLY VAN ACCESSIBLE		

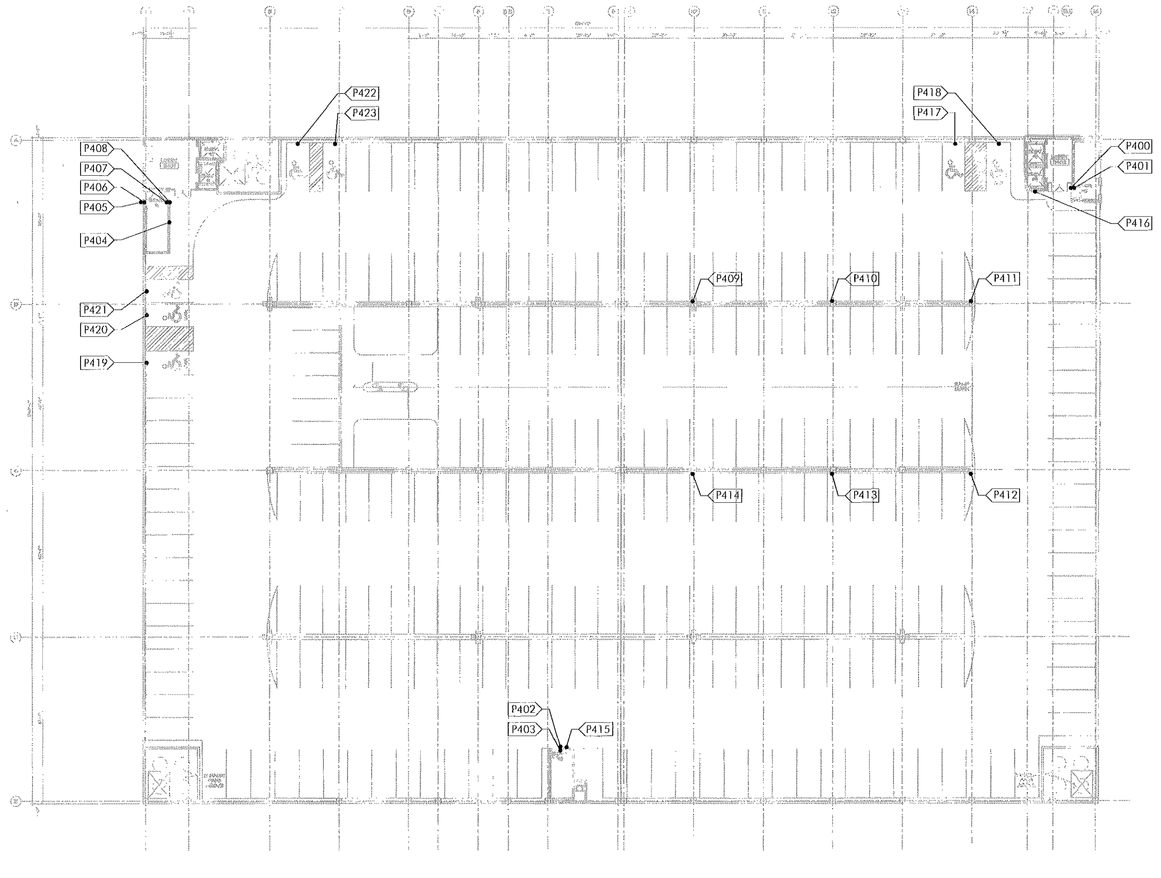

1 Fourth Level
Scale: 1/32" = 1'

Eddy Street Commons Parking Garage
100% Design Intent Drawings

Fourth Level Message Schedule
January 24, 2008 • 02.07007.09

Location Number	Sign Type	Message	Power Requested	Double Sided
P400	PK.CD.2	STAIR 2 (g2b)		
P401	PK.CD.3	STAIR 2 4 4TH LEVEL (g2b) BASEMENT LEVEL TO ROOF ROOF ACCESS DOWN TO FIRST FLOOR FOR EXIT DISCHARGE **PENDING FIRE DEPARTMENT APROVAL**		
P402	PK.CD.2	STAIR 3 (g2b)		
P403	PK.CD.3	STAIR 3 4 4TH LEVEL (g2b) BASEMENT LEVEL TO ROOF ROOF ACCESS DOWN TO FIRST FLOOR FOR EXIT DISCHARGE **PENDING FIRE DEPARTMENT APROVAL**		
P404	PK.WF.4	STAIR TO EDDY STREET 4		
P405	PK.CD.2	STAIR 1 (g2b)		
P406	PK.CD.3	STAIR 1 4 4TH LEVEL (g2b) BASEMENT LEVEL TO ROOF ROOF ACCESS DOWN TO FIRST FLOOR FOR EXIT DISCHARGE **PENDING FIRE DEPARTMENT APROVAL**		
P407	PK.CD.3	STAIR 1 4 4TH LEVEL (g2b) BASEMENT LEVEL TO ROOF ROOF ACCESS DOWN TO FIRST FLOOR FOR EXIT DISCHARGE **PENDING FIRE DEPARTMENT APROVAL**		
P408	PK.CD.2	STAIR 1 (g2b)		
P409	PK.WF.3	4		
P410	PK.WF.3	4		
P411	PK.WF.3	4		
P412	PK.WF.3	4		
P413	PK.WF.3	4		
P414	PK.WF.3	4		
P415	PK.WF.4	STAIR TO NAPOLEON STREET 4		
P416	PK.WF.4	STAIR TO HOTEL 4		

Location Number	Sign Type	Message	Power Requested	Double Sided
P417	PK.CD.4	DISABLED PARKING ONLY VAN ACCESSIBLE		
P418	PK.CD.4	DISABLED PARKING ONLY VAN ACCESSIBLE		
P419	PK.CD.5	DISABLED PARKING ONLY VAN ACCESSIBLE		
P420	PK.CD.5	DISABLED PARKING ONLY VAN ACCESSIBLE		
P421	PK.CD.4	DISABLED PARKING ONLY		
P422	PK.CD.4	DISABLED PARKING ONLY		
P423	PK.CD.4	DISABLED PARKING ONLY		

DESIGN INTENT ONLY
FABRICATOR MUST SUBMIT SHOP
DRAWINGS FOR REVIEW
PRIOR TO FABRICATION

FINK ROBERTS & PETRIE, INC.
CIVIL • STRUCTURAL • TRANSPORTATION
4640 Vincennes Circle Suite 300
Indianapolis, Indiana 46268

Eddy Street Commons
Phase II
Parking Garage
Project Number 108-004

Owner
City of South Bend, Indiana

Construction Manager
Kite Realty Group
30 South Meridian Street, Suite 1100
Indianapolis, Indiana 46204
317-577-5600

Structural Engineer
Fink, Roberts & Petrie, Inc.
4640 Vincennes Circle, Suite 300
Indianapolis, Indiana 46268
317-872-8400

Architect
Looney Ricks Kiss
175 Toyota Plaza, Suite 600
Memphis, Tennessee 38103
901-521-1440

Mechanical, Electrical & Plumbing Engineer
Circle Design Group
5510 South East Street, Suite F
Indianapolis, Indiana 46227
317-781-6200

Parking Consultant
Walker Parking Consultants
6602 East 75th Street, Suite 210
Indianapolis, Indiana 46250
317-842-6890

Civil Engineer/Landscape Architect
The Troyer Group
550 Union Street
Mishawaka, Indiana 46554
574-259-9976

100% Construction
Documents
January 23, 2008

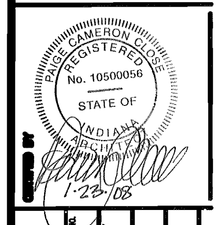

ISSUE DATE
ISSUE PROJECT NO.
ISSUE DRAWN BY
CHECKED BY

ISSUE FOR:
THIRD LEVEL: LOCATION PLAN
MESSAGE SCHEDULE
FOURTH LEVEL: LOCATION PLAN
MESSAGE SCHEDULE

SHEET NO.
A803

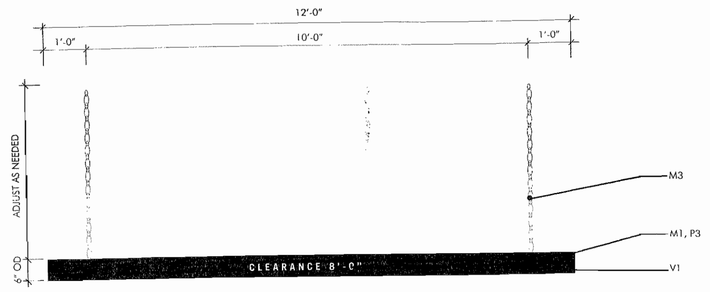

1 PK.BB.1: FRONT ELEVATION
Scale: 1/2" = 1'

2 PK.BB.1: SIDE ELEVATION
Scale: 1/2" = 1'

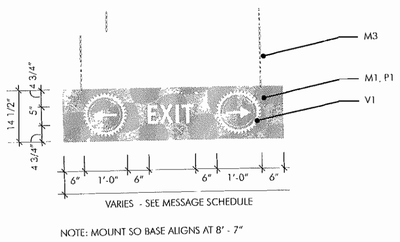

NOTE: MOUNT SO BASE ALIGNS AT 8' - 2"

3 PK.WF.1
Scale: 1/2" = 1'

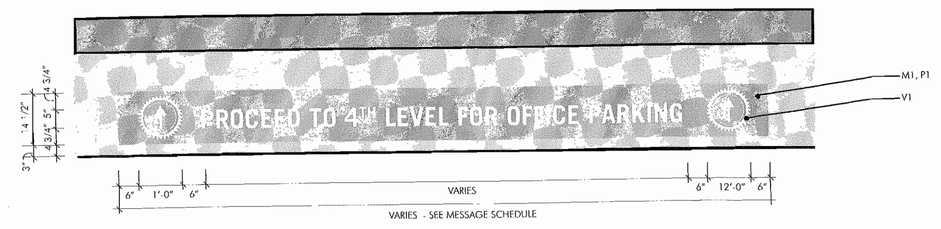

4 PK.WF.2
Scale: 1/2" = 1'

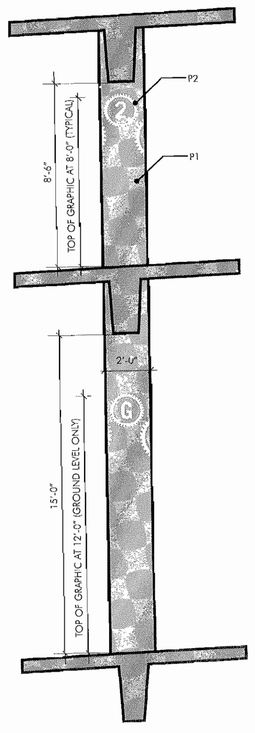

5 PK.WF.3: FRONT ELEVATION
Scale: 1/4" = 1'

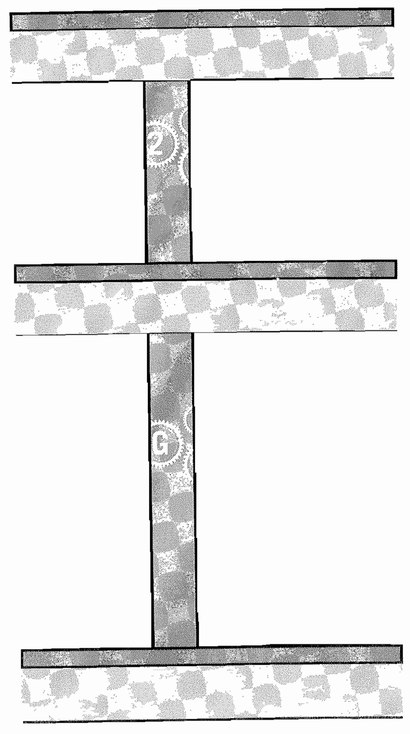

6 PK.WF.3: SIDE ELEVATION
Scale: 1/4" = 1'

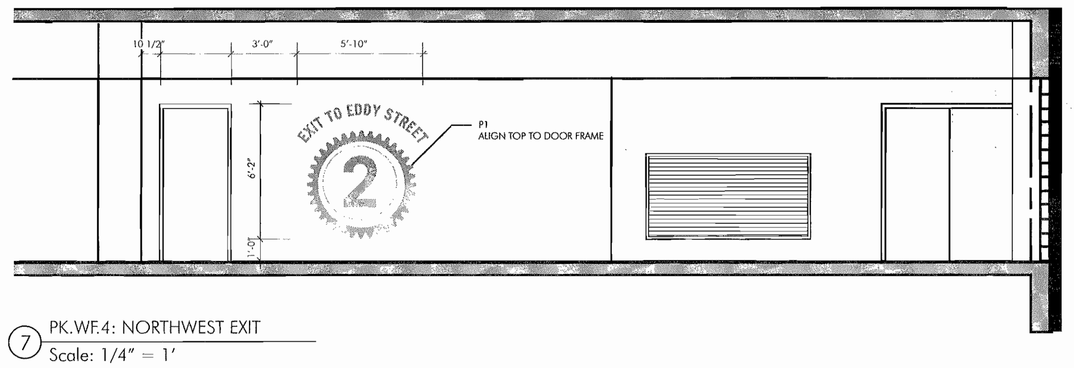

7 PK.WF.4: NORTHWEST EXIT
Scale: 1/4" = 1'

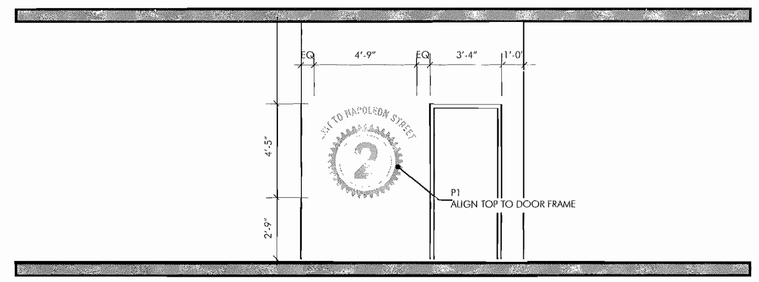

8 PK.WF.4: SOUTH EXIT
Scale: 1/4" = 1'

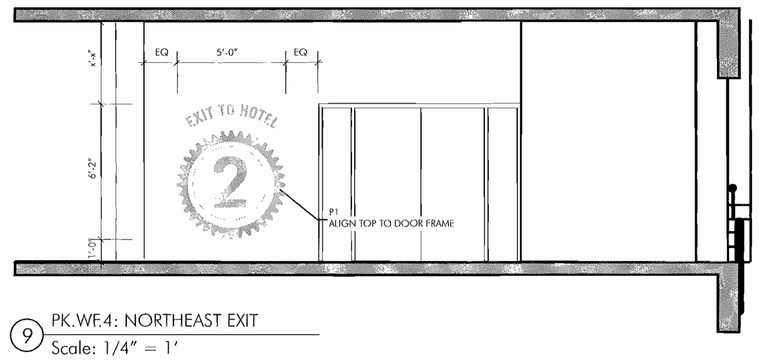

9 PK.WF.4: NORTHEAST EXIT
Scale: 1/4" = 1'

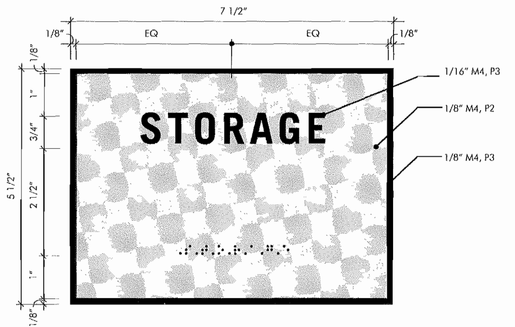

10 PK.CD.1: FRONT ELEVATION
Scale: 1/4" = 1'

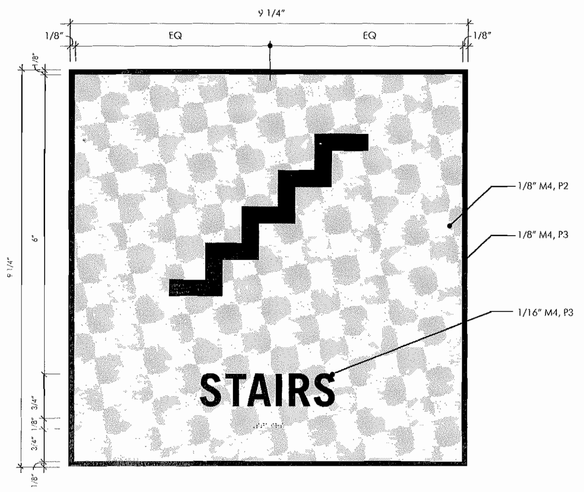

11 PK.CD.2: FRONT ELEVATION
Scale: 1/4" = 1'

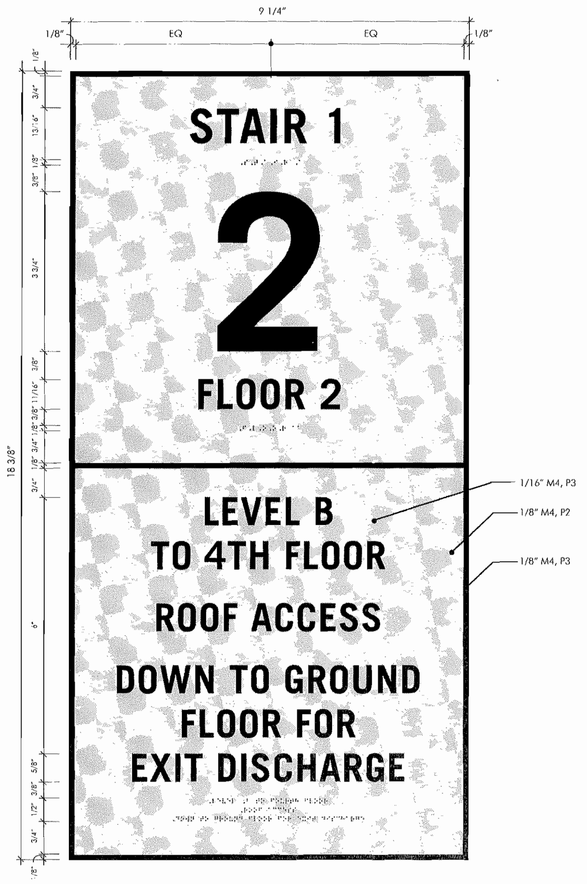

12 PK.CD.3: FRONT ELEVATION
Scale: 1/4" = 1'

DESIGN INTENT ONLY
FABRICATOR MUST SUBMIT SHOP DRAWINGS FOR REVIEW PRIOR TO FABRICATION

FINK ROBERTS & PETRIE, INC.
Consulting Engineers
4040 Vincennes Circle Suite 300
Indianapolis, Indiana 46268

Eddy Street Commons
Phase II
Parking Garage
Project Number 108-004

Owner
City of South Bend, Indiana

Construction Manager
Kite Realty Group
30 South Meridian Street, Suite 1100
Indianapolis, Indiana 46204
317-577-5600

Structural Engineer
Fink, Roberts & Petrie, Inc.
4040 Vincennes Circle, Suite 300
Indianapolis, Indiana 46268
317-872-8400

Architect
Looney Ricks Kiss
175 Toyota Plaza, Suite 600
Memphis, Tennessee 38103
901-521-1440

Mechanical, Electrical & Plumbing Engineer
Circle Design Group
5510 South East Street, Suite F
Indianapolis, Indiana 46227
317-781-6200

Parking Consultant
Walker Parking Consultants
6002 East 75th Street, Suite 210
Indianapolis, Indiana 46250
317-842-6800

Civil Engineer/Landscape Architect
The Troyer Group
550 Union Street
Mishawaka, Indiana 46554
574-259-9976

100% Construction Documents
January 23, 2008

ISSUED BY
PAIGE CAMERON LOOSE
REGISTERED
No. 10500056
STATE OF
INDIANA
1-23-08

ISSUE DATE
ISSUE TRACKING
ISSUE ISSUED BY
CHECKED BY

ISSUE TITLE
DESIGN INTENT DRAWINGS

SHEET NO.
A804

STANDARD HVAC ABBREVIATIONS

AC	ALTERNATING CURRENT	IN.	INCH
ACU	AIR CONDITIONING UNIT	GPH	GALLONS PER HOUR
ACCU	AIR COOLED CONDENSING UNIT	GPM	GALLONS PER MINUTE
		HE	HEAT EXCHANGER
AD	ACCESS DOOR	HP	HORSEPOWER
AFF	ABOVE FINISHED FLOOR	LAT	LEAVING AIR TEMPERATURE
AHU	AIR HANDLING UNIT	LD	LINEAR DIFFUSER
AMB	AMBIENT	LDR	LINEAR RETURN DIFFUSER
AMP	AMPERE	LWT	LEAVING WATER TEMPERATURE
AP	ACCESS PANEL	MAU	MAKEUP AIR HANDLING UNIT
AS	AIR SEPARATOR	MBH	1000 BTU PER HOUR
BD	BALANCING DAMPER	MC	MECHANICAL CONTRACTOR
BDD	BACK DRAFT DAMPER	MD	MOTORIZED DAMPER
BE	BOTTOM ELEVATION	NA	NOT APPLICABLE
BHP	BRAKE HORSEPOWER	NC	NORMALLY CLOSED
BTU	BRITISH THERMAL UNIT	NO	NORMALLY OPEN
CFM	CUBIC FOOT PER MINUTE	NOM	NOMINAL
CUH	CABINET UNIT HEATER	OA	OUTSIDE AIR
CO	CLEANOUT	PD	PRESSURE DROP
CONV	CONVECTOR	PH	PHASE (ELECTRICAL)
D	DRAIN PIPING	PRV	PRESSURE REDUCING VALVE
DB	DRY BULB	PSI	POUNDS PER SQUARE INCH
DC	DIRECT CURRENT	PSIG	PSI GAUGE
DX	DIRECT EXPANSION (REFRIGERATION)	PUH	PROPELLER UNIT HEATER
		PVC	POLYVINYL CHLORIDE
EA	EXHAUST AIR (RELIEF)	RA	RETURN AIR
EB	ELECTRIC BOILER	RG	RETURN GRILLE
EC	ELLCTRICAL CONTRACTOR	RPM	REVOLUTIONS PER MINUTE
ECG	EGG CRATE GRILLE	RTU	ROOFTOP AIR HANDLING UNIT
EF	EXHAUST FAN	SA	SUPPLY AIR
EG	EXHAUST GRILLE	SB	STEAM BOILER
EAT	ENTERING AIR TEMPERATURE	SCD	SQUARE CEILING DIFFUSER
ET	EXPANSION TANK	SF	SUPPLY FAN
EWT	ENTERING WATER TEMPERATURE	SG	SUPPLY GRILLE
		SP	STATIC PRESSURE
EX	EXISTING	SKF	SMOKE REMOVAL FAN
EXH	EXHAUST	SS	STAINLESS STEEL
FA	FACE AREA	TA	THROW AWAY
FDR	FIRE DAMPER	TC	TEMPERATURE CONTROL
FPM	FEET PER MINUTE	TCC	TEMPERATURE CONTROL CONTRACTOR
FPVAV	FAN POWERED VARIABLE AIR VOLUME	TD	TEMPERATURE DROP
		TE	TOP ELEVATION
F/SDR	FIRE/SMOKE DAMPER	V	VOLTS (ELECTRICAL)
FT	FEET	VAV	VARIABLE AIR VOLUME
FV	FACE VELOCITY	VF	VENTILATING FAN
GB	GAS BOILER	WB	WET BULB
GC	GENERAL CONTRACTOR	WG	WATER GAUGE

STANDARD HVAC SYMBOLS

CHILLED WATER SUPPLY — CHS
CHILLED WATER RETURN — CHR
HEATING WATER SUPPLY — HS
HEATING WATER RETURN — HR
DUAL TEMP. WATER SUPPLY — HCHS
DUAL TEMP. WATER RETURN — HCHR
CONDENSER WATER SUPPLY — CS
CONDENSER WATER RETURN — CR
STEAM (LOW PRESSURE) — S
STEAM (PRESSURE INDICAT.) — S-30
CONDENSATE RETURN — R
PUMPED CONDENSATE — PCR
WELL WATER SUPPLY — WW
MAKEUP WATER — MW
PIPE TO BE REMOVED
REFRIGERANT DISCHARGE — RD
REFRIGERANT SUCTION — RS
REFRIGERANT LIQUID — RL
DRAIN — D
HEAT PUMP WATER SUPPLY — HPWS
HEAT PUMP WATER RETURN — HPWR
PIPE DOWN
PIPE UP
PIPE SLOPE DIRECTION
FLOW
PLAN NOTE (1)
SPACE SENSOR WITH UNIT DESIGNATION, WHITE COVER. (H) X-X
SPACE SENSOR WITH UNIT DESIGNATION & QUANTITY OF FLOOR DIFFUSERS. (H) X-2
SPACE SENSOR WITH BRUSHED STAINLESS STEEL COVER. (H) SS
SPACE SENSOR WITH BRUSHED BRASS COVER, #3 FINISH. (H) BR
SPACE SENSOR WITH BRUSHED ALUMINUM COVER. (H) AL
ALUMINUM DUCT — ALUM
INTERNALLY LINED DUCTWORK
PRE-INSULATED FLEXIBLE DUCT
FLEXIBLE CONNECTION
BALANCING DAMPER, ROUND DUCT — RD
BALANCING DAMPER, RECT. DUCT — RD
FIRE DAMPER AND ACCESS DOOR — FDR AD
TEMPERATURE CONTROL DAMPER AND ACCESS DOOR — TCD AD
SQUARE CEILING DIFFUSER
SLOT/LINEAR DIFFUSER
CEILING RETURN/EXHAUST GRILLE
DETAIL REFERENCE — DET# SHT#
SECTION REFERENCE — SEC# SHT#

FIRE PROTECTION SYMBOLS

AUTOMATIC SPRINKLER/ FIRE MAIN — F
DRY STANDPIPE — DS
VALVE IN VERTICAL
SHUTOFF VALVE
CHECK VALVE
PITCH PIPE DOWN IN DIRECTION OF ARROW
FLOW IN DIRECTION OF ARROW
PIPE DOWN (ELBOW)
PIPE UP (ELBOW)
DROP
BRANCH TOP CONNECTION
BRANCH BOTTOM CONNECTION
PUMPER CONNECTION
DOUBLE CHECK VALVE ASSEMBLY — DC
DOUBLE CHECK DETECTOR VALVE ASSEMBLY — DCDA
EXISTING AUTOMATIC SPRINKLER/ FIRE MAIN — F

SPRINKLER LEGEND

UPRIGHT SPRINKLER HEAD
PENDENT SPRINKLER HEAD
SIDEWALL SPRINKLER HEAD
CONCEALED SPRINKLER HEAD
PENDENT SPRINKLER HEAD (SECURITY TYPE) — S
SIDEWALL SPRINKLER HEAD (SECURITY TYPE) — S
EXISTING SPRINKLER HEAD

STANDARD HVAC SYMBOLS

OVAL DUCT, DOWN
OVAL DUCT, UP
ROUND DUCT, DOWN
ROUND DUCT, UP
SQUARE/RECTANGULAR RETURN DUCT, DOWN
SQUARE/RECTANGULAR RETURN DUCT, UP
SQUARE/RECTANGULAR SUPPLY DUCT, DOWN
SQUARE/RECTANGULAR SUPPLY DUCT, UP

STANDARD PLUMBING ABBREVIATIONS

A	AIR	LW	LAB WASTE
ABS	ACRYLONITRILE-BUTADIENE-STYRENE	MC	MECHANICAL CONTRACTOR
		MH	MANHOLE
ACFM	ACTUAL CUBIC FEET PER MINUTE	MSB	MOP SERVICE BASIN
AD	AREA DRAIN	NC	NORMALLY CLOSED
AFF	ABOVE FINISHED FLOOR	NH	NO HUB
AFG	ABOVE FINISHED GRADE	NO	NORMALLY OPEN
AP	ACCESS PANEL	NPSH	NET POSITIVE SUCTION HEAD
AS	AUTOMATIC SPRINKLER	ORD	OVERFLOW ROOF DRAIN
BFP	BACKFLOW PREVENTER	OSD	OPEN SITE DRAIN
CA	COMPRESSED AIR	OV	OUTLET VELOCITY
CB	CATCH BASIN	PD	PRESSURE DROP
CBI	CURB INLET	PG	PRESSURE GAUGE
CD	CANOPY DRAIN	PH	PHASE (ELECTRICAL)
CFH	CUBIC FEET PER HOUR	PIV	POST INDICATOR VALVE
CFM	CUBIC FEET PER MINUTE	PPM	PARTS PER MILLION
CI	CAST IRON	PRV	PRESSURE REGULATING VALVE
CMP	CORRUGATED METAL PIPE	PSI	POUNDS PER SQUARE INCH
CO	CLEANOUT	PSIA	PSI ABSOLUTE
CONN	CONNECT	PSIG	PSI GAUGE
CP	CONCRETE PIPE	PVC	POLYVINYL CHLORIDE
CR	CONDENSATE RETURN	RC	ROOF CONDUCTOR
CW	COLD WATER	RD	ROOF DRAIN
DF	DRINKING FOUNTAIN	RPM	REVOLUTIONS PER MINUTE
DIA	DIAMETER	SC	SILL COCK
DN	DOWN	SCFM	STANDARD CUBIC FEET PER MINUTE
DS	DOWNSPOUT		
DW	DEIONIZED/DISTILLED WATER	SQFT	SQUARE FOOT
ELEV	ELEVATION	SH	SHOWER
EWC	ELECTRIC WATER COOLER	SHD	SHOWER DRAIN
FX	EXISTING	SK	SINK
F	DEGREES FAHRENHEIT	SP	STATIC PRESSURE
FD	FLOOR DRAIN	SS	SOIL STACK
FE	FIRE EXTINGUISHER	SSK	SERVICE SINK
FEC	FIRE EXTINGUISHER CABINET	SSTL	STAINLESS STEEL
FHC	FIRE HOSE CABINET	STM	STEAM
FPM	FEET PER MINUTE	TCV	TEMPERATURE CONTROL VALVE
FPS	FEET PER SECOND	TD	TEMPERATURE DROP
FS	FLOOR SINK	TDH	TOTAL DYNAMIC HEAD
FT	FEET	TDR	TRENCH DRAIN
G	GAS	TRM	THERMOMETER
GAL	GALLON	UR	URINAL
GC	GENERAL CONTRACTOR	V	VENT
GI	GALVANIZED IRON	VA	VALVE
GPD	GALLONS PER DAY	VB	VACUUM BREAKER
GPM	GALLONS PER MINUTE	VCP	VITRIFIED CLAY PIPE
HB	HOSE BIBB	VS	VENT STACK
HD	HEAD	VT	VITRIFIED TILE
HBD	HUB DRAIN	VTR	VENT THROUGH ROOF
HP	HORSEPOWER	W	WASTE
HW	HOT WATER	WC	WATER CLOSET
HWR	HOT WATER RETURN	WCO	WALL CLEANOUT
INV	INVERT	WG	WATER GAUGE
KEC	KITCHEN EQUIPMENT CONTRACTOR	WH	WALL HYDRANT
LAV	LAVATORY	WS	WASTE STACK
LFD	LAB FLOOR DRAIN	YD	YARD DRAIN
LV	LAB VENT	XVT	EXTRA-STRENGTH VITRIFIED TILE

STANDARD PLUMBING SYMBOLS

DOMESTIC COLD WATER
DOMESTIC HOT WATER
DOMESTIC HOT WATER RETURN
STORM WATER - SUSPENDED
STORM WATER - BURIED
SANITARY WASTE - SUSPENDED
SANITARY WASTE - BURIED
GREASE WASTE - SUSPENDED
GREASE WASTE - BURIED
CONDENSATE/DRAIN PIPE — D
SANITARY WASTE VENT
GAS — G
UNIONS/COUPLINGS
STRAINERS
BACKFLOW PREVENTER
VALVE IN VERTICAL
THREE-WAY VALVE
PRESSURE REDUCING VALVE
GLOBE VALVE
SHUTOFF VALVE
CHECK VALVE
SOLENOID VALVE
PITCH PIPE DOWN IN DIRECTION OF ARROW
FLOW IN DIRECTION OF ARROW
PIPE DOWN (ELBOW)
PIPE UP (ELBOW)
DROP
BRANCH TOP CONNECTION
BRANCH BOTTOM CONNECTION
EXISTING DOMESTIC COLD WATER
EXISTING DOMESTIC HOT WATER
EXISTING DOMESTIC HOT WATER RETURN
EXISTING STORM WATER - SUSPENDED
EXISTING STORM WATER - BURIED
EXISTING SANITARY WASTE - SUSPENDED
EXISTING SANITARY WASTE - BURIED

PROJECT MECHANICAL GENERAL NOTES:

1. VERIFY EXISTING CONDITIONS IN THE FIELD PRIOR TO BIDDING AND BEFORE BEGINNING WORK.
2. REVIEW THE WORK OF OTHER TRADES. COORDINATE AND PLAN WORK WITH THE OTHER TRADES. ADJUST AS A RESULT OF COORDINATION. REVIEW COORDINATED EFFORTS WITH ENGINEER FOR APPROVAL.
3. REFER TO ARCHITECTURAL REFLECTED CEILING PLANS FOR EXACT LOCATION OF ALL CEILING MOUNTED ITEMS.
4. STORE EQUIPMENT AND COMPONENTS IN A CLEAN, DRY LOCATION UNTIL READY FOR INSTALLATION. PROTECT FROM WEATHER, THEFT, DIRT, FUMES, WATER, CONSTRUCTION DEBRIS, ETC. AT ALL TIMES. ANY DAMAGED EQUIPMENT OR COMPONENT SHALL BE RESTORED AS NEW OR REPLACED.
5. MECHANICAL DRAWINGS SHOW THE INTENDED ARRANGEMENT AND ROUTING OF ALL PIPING, DUCTWORK, EQUIPMENT, AND APPURTENANCES. THEY SHALL BE FOLLOWED AS CLOSELY AS ACTUAL BUILDING CONSTRUCTION AND WORK OF OTHER TRADES WILL PERMIT.
6. PERFORM ALL WORK IN A SKILLED, PROFESSIONAL, MANNER, MEETING THE ACCEPTANCE OF THE ENGINEER, ARCHITECT AND OWNER.
7. LABEL ALL ROOM THERMOSTATS AND/OR SENSOR DEVICES AS TO WHAT THE DEVICE CONTROLS WITH A PLASTIC ENGRAVED LABEL AFFIXED TO THE COVERS.
8. SMALLEST PIPE SIZE ALLOWABLE IS 3/4" UNLESS SPECIFICALLY NOTED OTHERWISE.
9. MOUNTING HEIGHTS OF DEVICES SHALL FOLLOW THE LISTING BELOW UNLESS SPECIFICALLY NOTED OTHERWISE ON THE DRAWINGS. ALL HEIGHTS ARE TO CENTERLINE OF THE DEVICE.

   THERMOSTAT OR TEMPERATURE/HUMIDITY SENSOR.....+48" A.F.F.

10. CLEAN ALL EQUIPMENT TO PRESENT A "LIKE NEW" CONDITION AT PROJECT COMPLETION. VACUUM CLEAN INTERNAL AREAS OF EQUIPMENT AND PANELS.
11. CLEAN ALL MECHANICAL AND ELECTRICAL AREAS AND ROOMS OF DEBRIS AND UNUSED MATERIALS. VACUUM FLOORS.
12. OFFSET PIPING AROUND ELECTRICAL PANELS TO PROVIDE CLEARANCES AS REQUIRED BY NATIONAL ELECTRICAL CODE.
13. REFERENCE THE ARCHITECTURAL ELEVATIONS FOR LOCATIONS OF ALL MECHANICAL ITEMS INTERFACING OR ARE WITHIN THE EXTERIOR WALLS. (I.E. WALL HYDRANTS, LOUVERS, ETC.)

FINK ROBERTS & PETRIE, INC.
Consulting Engineers
4040 Vincennes Circle Suite 300
Indianapolis, Indiana 46268

Eddy Street Commons
Phase II
Parking Garage
Project Number 108-004

Owner
City of South Bend, Indiana

Construction Manager
Kite Realty Group
30 South Meridian Street, Suite 1100
Indianapolis, Indiana 46204
317-577-5600

Structural Engineer
Fink, Roberts & Petrie, Inc.
4040 Vincennes Circle, Suite 300
Indianapolis, Indiana 46268
317-872-8400

Architect
Looney Ricks Kiss
175 Toyota Plaza, Suite 600
Memphis, Tennessee 38103
901-521-1440

Mechanical, Electrical & Plumbing Engineer
Circle Design Group
5510 South East Street, Suite F
Indianapolis, Indiana 46227
317-781-6200

Parking Consultant
Walker Parking Consultants
6602 East 75th Street, Suite 210
Indianapolis, Indiana 46250
317-842-6890

Civil Engineer/Landscape Architect
The Troyer Group
550 Union Street
Mishawaka, Indiana 46544
574-259-9976

100% Construction Documents
January 23, 2008

NO.	DATE	REVISION DESCRIPTION

CERTIFIED BY
JEFFERY L. KRAUSE — REGISTERED PROFESSIONAL ENGINEER — No. 870242 — STATE OF INDIANA

ISSUED	DRAWN BY	CHECKED BY
07098	R. MERTENS	G. CHAMPION

SHEET TITLE
SYMBOLS AND ABBREVIATIONS - MECHANICAL

SHEET NO.
M001

G:\Mech\07098\M001.dwg, 1/23/2008 9:40:41 AM, Bill Nord
Plotted By: Thos of Plot(1/2)/Ps-6-60cm Last Edited By/MJD-11:50am
G:\Mech\07098\

G:\plans\P2005\ Plotted By: Tom at Plot1/23/08 - 9:32am Last Edited: 1/23/08 - 9:30am

FOUNDATION PLAN - PLUMBING AND FIRE PROTECTION

FINISHED FLOOR ELEVATION 743.00'

SCALE: 1/16" = 1'-0"

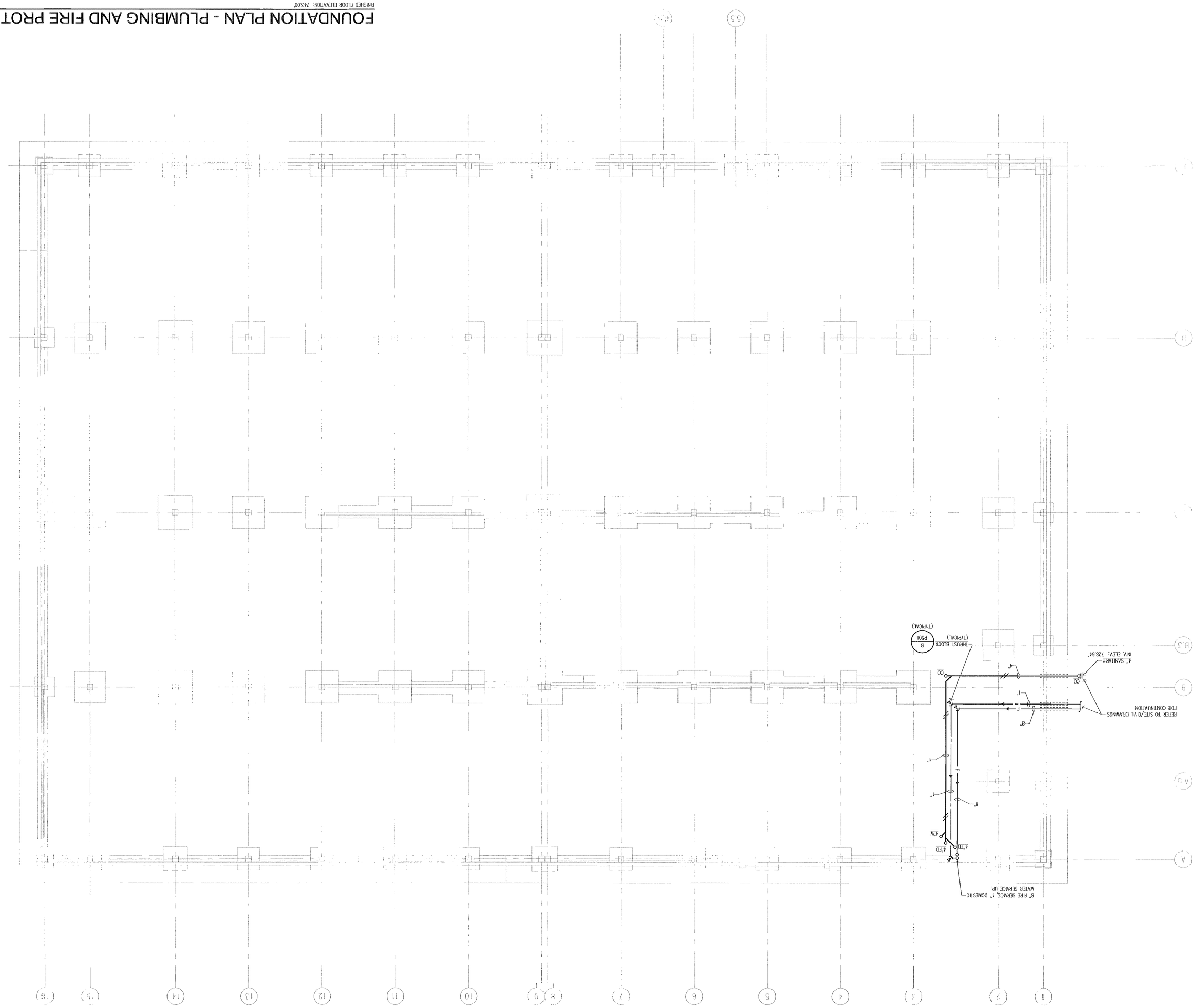

FINK ROBERTS & PETRIE, INC.
Consulting Engineers
2020 North Meridian Street
Indianapolis, Indiana 46202

Eddy Street Commons
Phase II
Parking Garage
Project Number 108-004

Owner
City of South Bend, Indiana

Construction Manager
Kite Realty Group
30 South Meridian Street, Suite 1100
Indianapolis, Indiana 46204
317-577-5600

Structural Engineer
Fink, Roberts & Petrie, Inc.
6040 Vermont Circle, Suite 300
Indianapolis, Indiana 46268
317-872-8400

Architect
Looney Ricks Kiss
175 Toyota Pass, Suite 600
Memphis, Tennessee 38103
901-521-1440

Mechanical, Electrical & Plumbing Engineer
Circle Design Group
5510 South East Street, Suite Y
Indianapolis, Indiana 46227
317-781-6300

Plbing Consultant
WalkEr Parking Consultants
6602 East 75th Street, Suite 210
Indianapolis, Indiana 46250
317-842-6890

Civil/Landscape Architect
The Troyer Group
230 Huron Street
Mishawaka, Indiana 46544
574-259-9976

SHEET NO.	SHEET TITLE	DATE	CERTIFIED BY	REVISION DATE	REVISION DESCRIPTION
P201	FOUNDATION PLAN PLUMBING AND FIRE PROTECTION	1/23/08 Project No. 07098 Drawn By: R. MERTENS Checked By: S. CHAMPION	JEFFREY L. WEISE No. 870242 STATE OF PROFESSIONAL ENGINEER		

10096 Construction
Documents
January 23, 2008

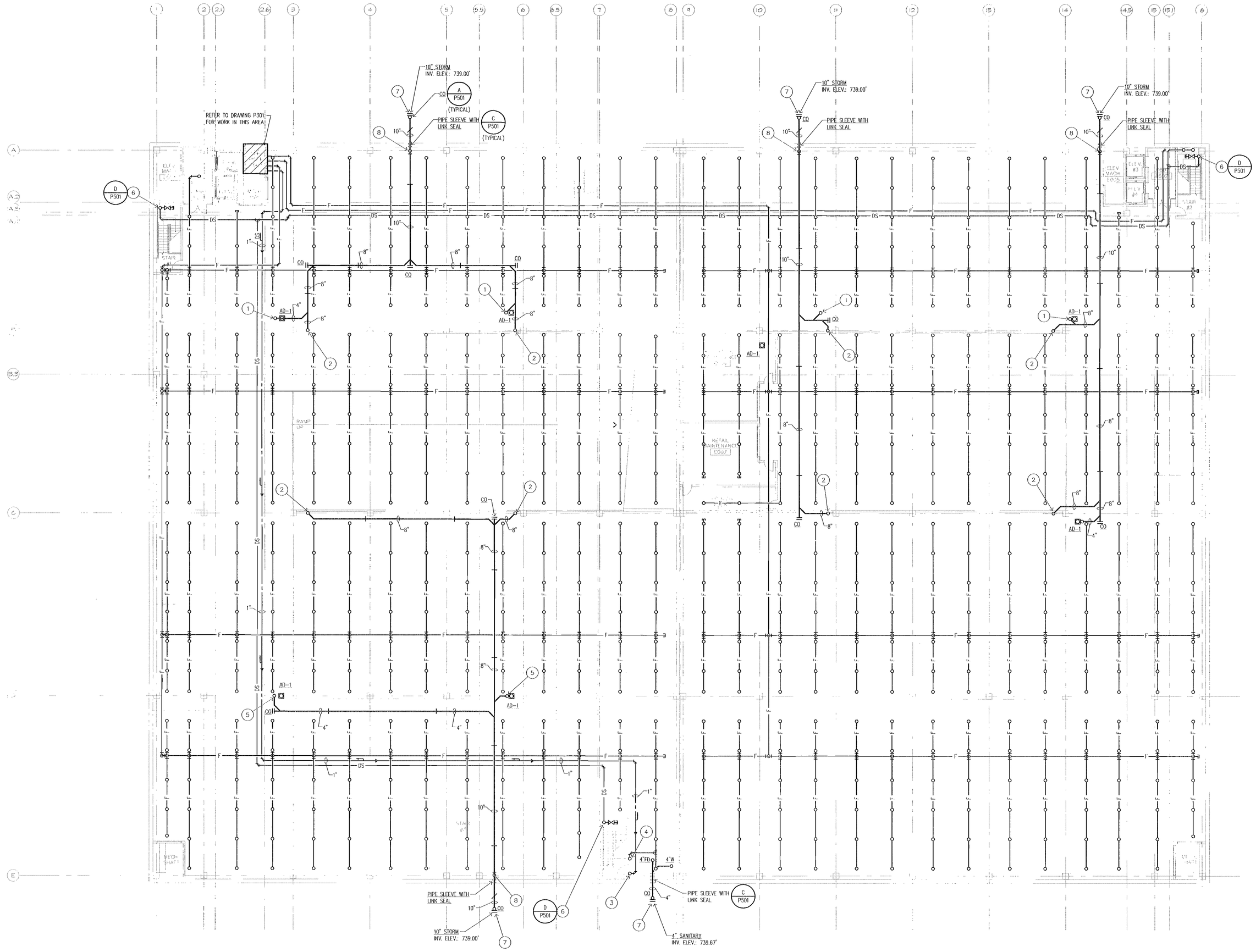

FLOOR PLAN - BASEMENT LEVEL - PLUMBING AND FIRE PROTECTION

SCALE: 1/16" = 1'-0"

GENERAL NOTES:

1. THE BUILDING SHALL BE PROTECTED BY A FULLY AUTOMATIC DRY SPRINKLER SYSTEM.
2. SYSTEM DENSITY COVERAGES AS FOLLOWS:

HAZARD	DENSITY	AREA	HEAD TEMP
LIGHT	.10 GPM	1500 FT/2	165° F
ORD GP 1	.15 GPM	1500 FT/2	165° F
ORD GP 2	.20 GPM	1500 FT/2	165° F

3. INSTALL SPRINKLER SYSTEM PER NFPA 13
4. COORDINATE SPRINKLER HEAD LAYOUT WITH ALL OTHER CEILING DEVICES.
5. ROUTE ALL SPRINKLER MAINS, BRANCH PIPING AND SPRINKLER HEAD RUN OUT PIPING AS TIGHT TO DECK AS POSSIBLE. COORDINATE ROUTING WITH ALL DUCTWORK AND OTHER TRADES.
6. SUBMIT PLANS TO ARCHITECT/ENGINEER FOR REVIEW PRIOR TO FABRICATION OF SYSTEM. ARCHITECT/ENGINEER RESERVES THE RIGHT TO ADD SPRINKLER HEADS AND PIPING OR ADJUST SPRINKLER HEAD LOCATIONS AT NO ADDITIONAL COST TO THE OWNER.

PLAN NOTES:

1. 4" STORM FROM AREA DRAIN (AD-1) ABOVE.
2. 8" STORM RISER FROM ABOVE AND DOWN WITH BAS OF RISER CLEANOUT.
3. TRASH CHUTE FIRE MAIN UP.
4. 1" COLD WATER UP.
5. 4" STORM FROM AREA DRAIN (AD-1) ABOVE AND DOWN WITH BASE OF RISER CLEANOUT.
6. 4" DRY STANDPIPE WITH 2 1/2" ANGLE VALVE, CAP AND CHAIN AT 42" ABOVE LANDING.
7. REFER TO SITE/CIVIL DRAWINGS FOR CONTINUATION.
8. 10" STORM DOWN AND THRU WALL WITH BASE OF RISER CLEANOUT.

FINK ROBERTS & PETRIE, INC.
Consulting Engineers
4040 Vincennes Circle Suite 300
Indianapolis, Indiana 46268

Eddy Street Commons
Phase II
Parking Garage
Project Number 108-004

Owner
City of South Bend, Indiana

Construction Manager
Kite Realty Group
30 South Meridian Street, Suite 1100
Indianapolis, Indiana 46204
317-577-5600

Structural Engineer
Fink, Roberts & Petrie, Inc.
4040 Vincennes Circle, Suite 300
Indianapolis, Indiana 46268
317-872-8400

Architect
Looney Ricks Kiss
175 Toyota Plaza, Suite 600
Memphis, Tennessee 38103
901-521-1440

Mechanical, Electrical & Plumbing Engineer
Circle Design Group
5510 South East Street, Suite F
Indianapolis, Indiana 46227
317-781-6200

Parking Consultant
Walker Parking Consultants
6602 East 75th Street, Suite 210
Indianapolis, Indiana 46250
317-842-6890

Civil Engineer/Landscape Architect
The Troyer Group
550 Union Street
Mishawaka, Indiana 46554
574-259-9976

100% Construction Documents
January 23, 2008

REVISION DATE | REVISION DESCRIPTION

CERTIFIED BY

JEFFERY L. WHITE
REGISTERED
No. 870242
STATE OF INDIANA
PROFESSIONAL ENGINEER

ISSUE DATE

DESIGN PROJECT NO. 07098
DESIGN DRAWN BY R. MERTENS
CHECKED BY G. CHAMPION

SHEET TITLE
FLOOR PLAN - BASEMENT LEVEL
PLUMBING AND FIRE PROTECTION

SHEET NO.
P202

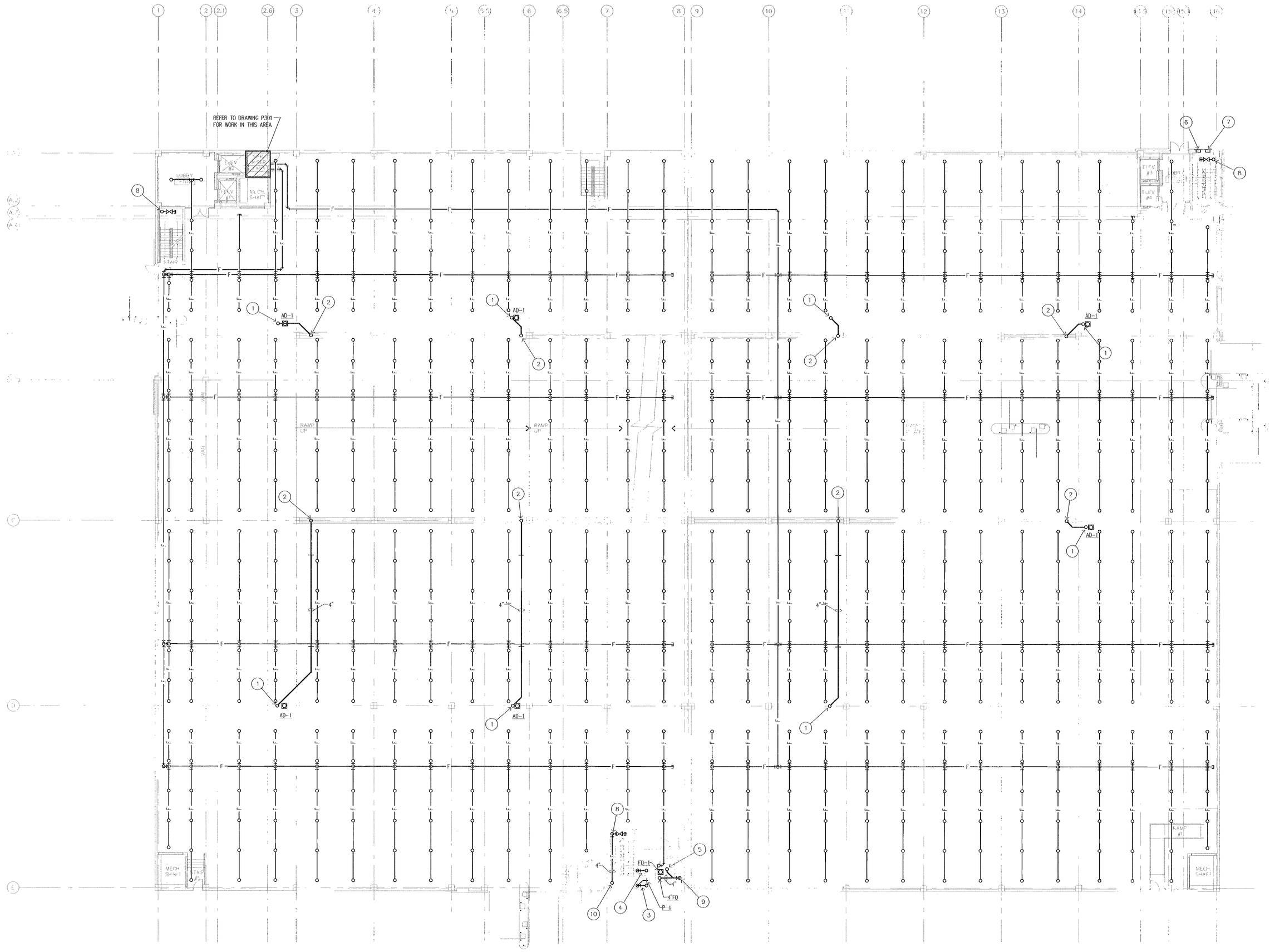

FLOOR PLAN - GROUND LEVEL - PLUMBING AND FIRE PROTECTION

FINISHED FLOOR ELEVATION: 743.00'

SCALE: 1/16" = 1'-0"

GENERAL NOTES:

1. THE BUILDING SHALL BE PROTECTED BY A FULLY AUTOMATIC DRY SPRINKLER SYSTEM.
2. SYSTEM DENSITY COVERAGES AS FOLLOWS:

HAZARD	DENSITY	AREA	HEAD TEMP
LIGHT	.10 GPM	1500 FT/2	165° F
ORD GP 1	.15 GPM	1500 FT/2	165° F
ORD GP 2	.20 GPM	1500 FT/2	165° F

3. INSTALL SPRINKLER SYSTEM PER NFPA 13
4. COORDINATE SPRINKLER HEAD LAYOUT WITH ALL OTHER CEILING DEVICES.
5. ROUTE ALL SPRINKLER MAINS, BRANCH PIPING AND SPRINKLER HEAD RUN OUT PIPING AS TIGHT TO DECK AS POSSIBLE. COORDINATE ROUTING WITH ALL DUCTWORK AND OTHER TRADES.
6. SUBMIT PLANS TO ARCHITECT/ENGINEER FOR REVIEW PRIOR TO FABRICATION OF SYSTEM. ARCHITECT/ENGINEER RESERVES THE RIGHT TO ADD SPRINKLER HEADS AND PIPING OR ADJUST SPRINKLER HEAD LOCATIONS AT NO ADDITIONAL COST TO THE OWNER.
7. TRASH CHUTE SPRINKLER SYSTEM: CHUTE SHALL BE PROTECTED INTERNALLY BY AUTOMATIC DRY SPRINKLER HEADS. THIS REQUIRES A SPRINKLER HEAD ABOVE THE TOP INTAKE DOOR OF THE CHUTE, A SPRINKLER HEAD AT THE SECOND LEVEL AND A SPRINKLER HEAD AT THE FIRST LEVEL.

PLAN NOTES:

1. 4" STORM FROM AREA DRAIN (AD-1) ABOVE.
2. 8" STORM RISER FROM ABOVE AND DOWN.
3. 1" COLD WATER FROM BELOW AND UP.
4. FIRE MAIN FROM BELOW AND UP.
5. 4" WASTE FROM ABOVE.
6. 2 1/2" X 2 1/2" X 4" FLUSH MOUNTED "DRY STANDPIPE" FIRE DEPARTMENT CONNECTION.
7. 2 1/2" X 2 1/2" X 6" FLUSH MOUNTED "DRY SPRINKLER SYSTEM" FIRE DEPARTMENT CONNECTION.
8. 4" DRY STANDPIPE WITH 2 1/2" ANGLE VALVE, CAP AND CHAIN AT 42" ABOVE LANDING.
9. 4" WASTE DOWN.
10. 4" DRY STANDPIPE UP.

FINK ROBERTS & PETRIE, INC.
Engineers
4040 Vincennes Circle Suite 300
Indianapolis, Indiana 46268

Eddy Street Commons
Phase II
Parking Garage
Project Number 108-004

Owner
City of South Bend, Indiana

Construction Manager
Kite Realty Group
30 South Meridian Street, Suite 1100
Indianapolis, Indiana 46204
317-577-5600

Structural Engineer
Fink, Roberts & Petrie, Inc.
4040 Vincennes Circle, Suite 300
Indianapolis, Indiana 46268
317-872-8400

Architect
Looney Ricks Kiss
175 Toyota Plaza, Suite 600
Memphis, Tennessee 38103
901-521-1440

Mechanical, Electrical & Plumbing Engineer
Circle Design Group
5510 South East Street, Suite F
Indianapolis, Indiana 46227
317-781-0200

Parking Consultant
Walker Parking Consultants
6600 East 75th Street, Suite 310
Indianapolis, Indiana 46250
317-842-6890

Civil Engineer/Landscape Architect
The Troyer Group
550 Union Street
Mishawaka, Indiana 46554
574-259-9976

100% Construction Documents
January 23, 2008

REVISION DATE	REVISION DESCRIPTION

CERTIFIED BY

JEFFERY L. WILLIAMS
No. 870242
STATE OF INDIANA
PROFESSIONAL ENGINEER

DESIGNED	DRAWN	CHECKED	DESIGN DATE
07098	R. MERTENS	C. CHAMPION	

SHEET TITLE
FLOOR PLAN - GROUND LEVEL
PLUMBING AND FIRE PROTECTION

SHEET NO.
P203

G:\plumb\07098\ Plotted By: Thom at Fink13_P203-100-Sheet Last Edited: 1/23/08-8:03am

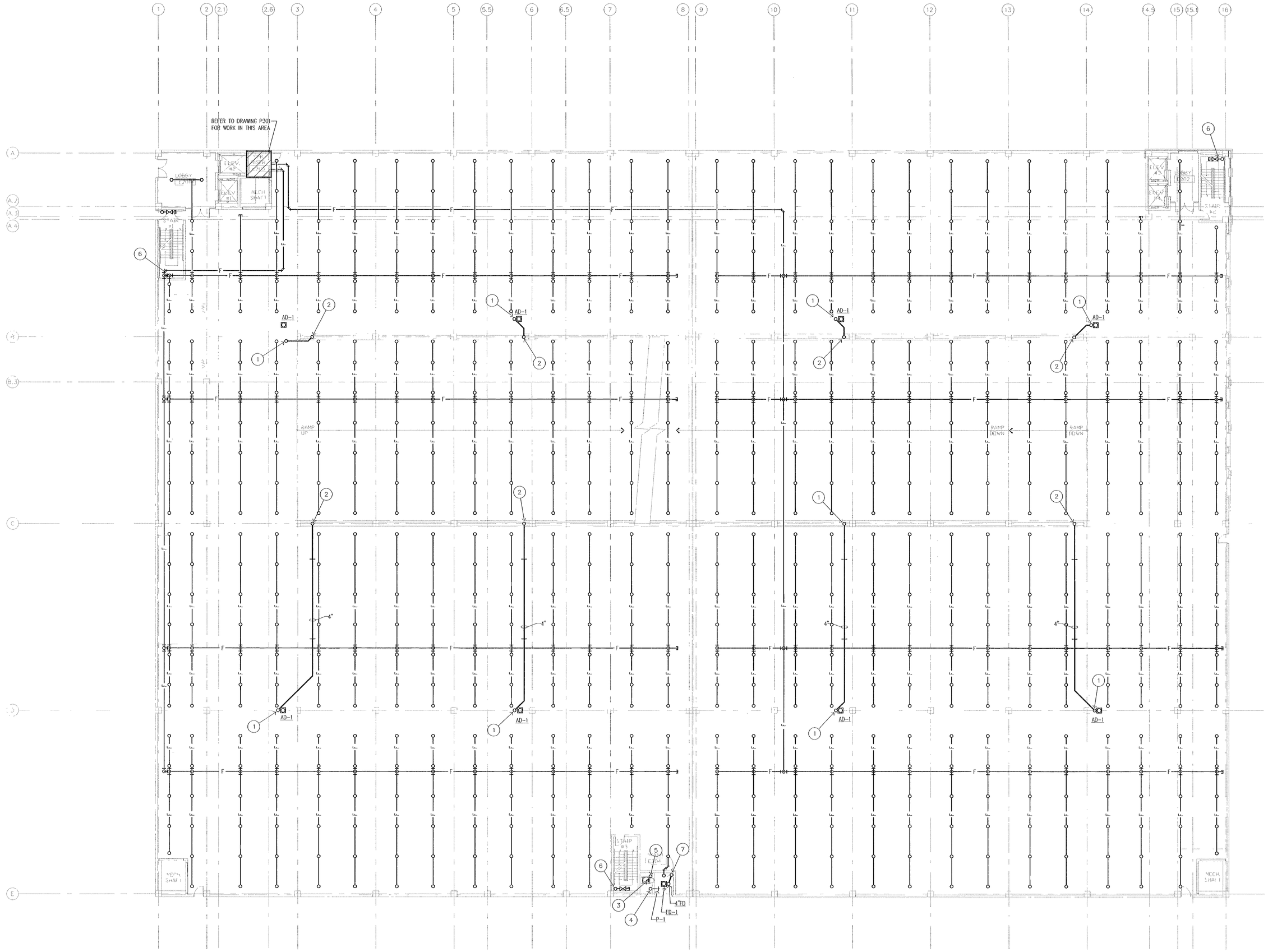

FLOOR PLAN - SECOND LEVEL - PLUMBING AND FIRE PROTECTION

SCALE: 1/16" = 1'-0"

GENERAL NOTES:

1. THE BUILDING SHALL BE PROTECTED BY A FULLY AUTOMATIC DRY SPRINKLER SYSTEM.
2. SYSTEM DENSITY COVERAGES AS FOLLOWS:

HAZARD	DENSITY	AREA	HEAD TEMP.
LIGHT	.10 GPM	1500 FT/2	165° F
ORD GP1	.15 GPM	1500 FT/2	165° F
ORD GP 2	.20 GPM	1500 FT/2	165° F

3. INSTALL SPRINKLER SYSTEM PER NFPA 13
4. COORDINATE SPRINKLER HEAD LAYOUT WITH ALL OTHER CEILING DEVICES.
5. ROUTE ALL SPRINKLER MAINS, BRANCH PIPING AND SPRINKLER HEAD RUN OUT PIPING AS TIGHT TO DECK AS POSSIBLE. COORDINATE ROUTING WITH ALL DUCTWORK AND OTHER TRADES.
6. SUBMIT PLANS TO ARCHITECT/ENGINEER FOR REVIEW PRIOR TO FABRICATION OF SYSTEM. ARCHITECT/ENGINEER RESERVES THE RIGHT TO ADD SPRINKLER HEADS AND PIPING OR ADJUST SPRINKLER HEAD LOCATIONS AT NO ADDITIONAL COST TO THE OWNER.
7. TRASH CHUTE SPRINKLER SYSTEM: CHUTE SHALL BE PROTECTED INTERNALLY BY AUTOMATIC DRY SPRINKLER HEADS. THIS REQUIRES A SPRINKLER HEAD ABOVE THE TOP INTAKE DOOR OF THE CHUTE, A SPRINKLER HEAD AT THE SECOND LEVEL AND A SPRINKLER HEAD AT THE FIRST LEVEL.

PLAN NOTES:

1. 4" STORM FROM AREA DRAIN (AD-1) ABOVE.
2. 8" STORM RISER FROM ABOVE AND DOWN.
3. SPRINKLER HEAD ABOVE TRASH CHUTE DOOR. COORDINATE WITH TRASH CHUTE MANUFACTURER.
4. 1" COLD WATER FROM BELOW AND UP.
5. FIRE MAIN FROM BELOW AND UP.
6. 4" DRY STANDPIPE WITH 2 1/2" ANGLE VALVE, CAP AND CHAIN AT 42" ABOVE LANDING.
7. 4" WASTE DOWN. 2" VENT UP.

FINK ROBERTS & PETRIE, INC.
Consulting Engineers
4040 Vincennes Circle Suite 300
Indianapolis, Indiana 46268

Eddy Street Commons
Phase II
Parking Garage
Project Number 108-004

Owner
City of South Bend, Indiana

Construction Manager
Kite Realty Group
30 South Meridian Street, Suite 1100
Indianapolis, Indiana 46204
317-577-5600

Structural Engineer
Fink, Roberts & Petrie, Inc.
4040 Vincennes Circle, Suite 300
Indianapolis, Indiana 46268
317-872-8400

Architect
Looney Ricks Kiss
175 Toyota Plaza, Suite 600
Memphis, Tennessee 38103
901-521-1440

Mechanical, Electrical & Plumbing Engineer
Circle Design Group
5510 South East Street, Suite F
Indianapolis, Indiana 46227
317-781-6200

Parking Consultant
Walker Parking Consultants
6602 East 75th Street, Suite 210
Indianapolis, Indiana 46250
317-842-6890

Civil Engineer/Landscape Architect
The Troyer Group
550 Union Street
Mishawaka, Indiana 46554
574-259-9976

100% Construction Documents
January 23, 2008

REVISION DATE | REVISION DESCRIPTION

CERTIFIED BY
JEFFERY L. WYLIE
REGISTERED
No. 870242
STATE OF INDIANA
PROFESSIONAL ENGINEER

DESIGN DATE
DESIGN PROJECT NO. 07098
DESIGN DRAWN BY R. MERTENS
CHECKED BY G. CHAMPION

SHEET TITLE
FLOOR PLAN - SECOND LEVEL
PLUMBING AND FIRE PROTECTION

SHEET NO.
P204

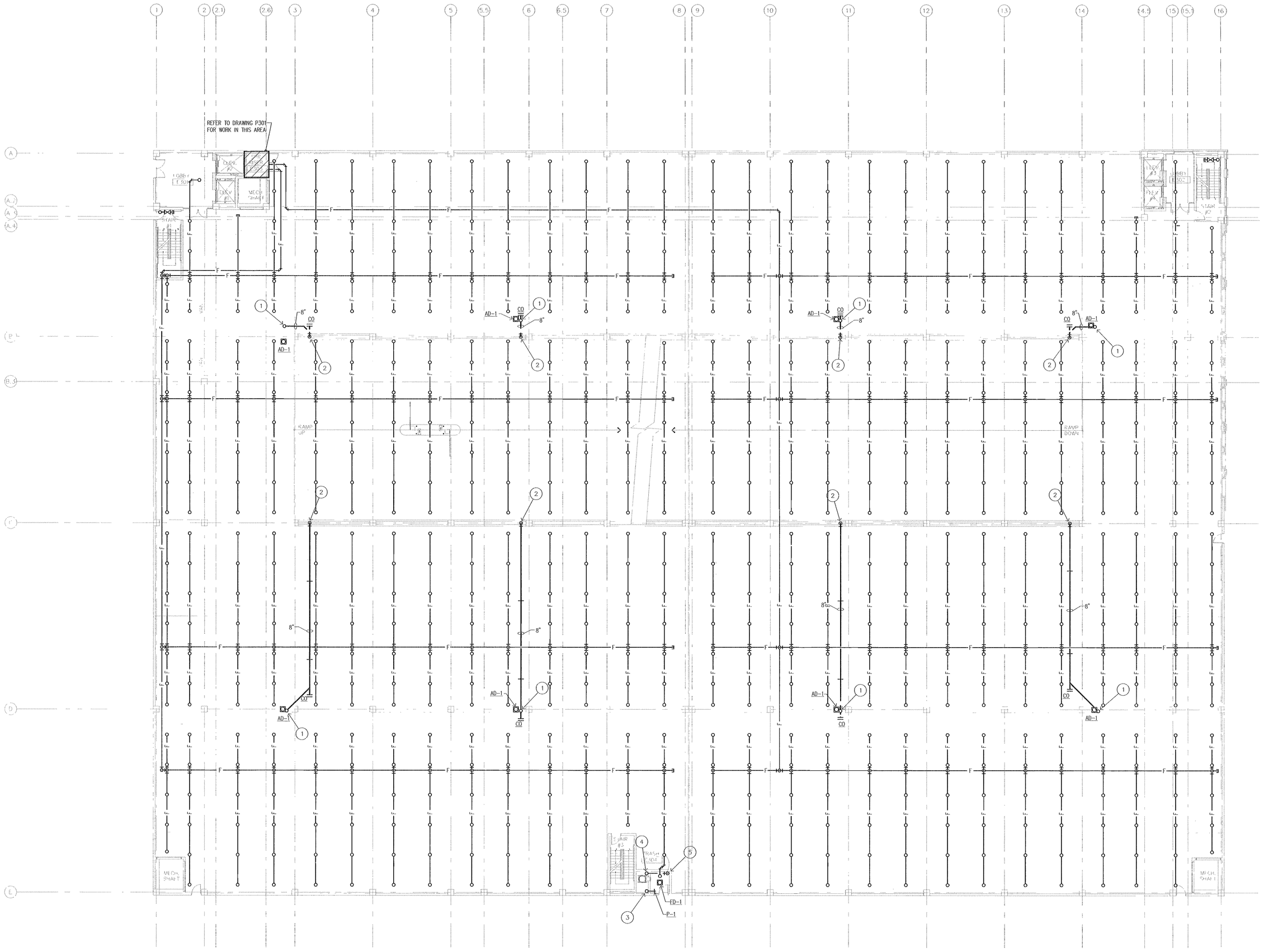

FLOOR PLAN - THIRD LEVEL - PLUMBING AND FIRE PROTECTION

SCALE: 1/16" = 1'-0"

GENERAL NOTES:

1. THE BUILDING SHALL BE PROTECTED BY A FULLY AUTOMATIC DRY SPRINKLER SYSTEM.
2. SYSTEM DENSITY COVERAGES AS FOLLOWS:

HAZARD	DENSITY	AREA	HEAD TEMP
LIGHT	.10 GPM	1500 FT/2	165° F
ORD GP 1	.15 GPM	1500 FT/2	165° F
ORD GP 2	.20 GPM	1500 FT/2	165° F

3. INSTALL SPRINKLER SYSTEM PER NFPA 13
4. COORDINATE SPRINKLER HEAD LAYOUT WITH ALL OTHER CEILING DEVICES.
5. ROUTE ALL SPRINKLER MAINS, BRANCH PIPING AND SPRINKLER HEAD RUN OUT PIPING AS TIGHT TO DECK AS POSSIBLE. COORDINATE ROUTING WITH ALL DUCTWORK AND OTHER TRADES.
6. SUBMIT PLANS TO ARCHITECT/ENGINEER FOR REVIEW PRIOR TO FABRICATION OF SYSTEM. ARCHITECT/ENGINEER RESERVES THE RIGHT TO ADD SPRINKLER HEADS AND PIPING OR ADJUST SPRINKLER HEAD LOCATIONS AT NO ADDITIONAL COST TO THE OWNER.
7. TRASH CHUTE SPRINKLER SYSTEM: CHUTE SHALL BE PROTECTED INTERNALLY BY AUTOMATIC DRY SPRINKLER HEADS. THIS REQUIRES A SPRINKLER HEAD ABOVE THE TOP INTAKE DOOR OF THE CHUTE, A SPRINKLER HEAD AT THE SECOND LEVEL AND A SPRINKLER HEAD AT THE FIRST LEVEL.

PLAN NOTES:

1. 8" STORM FROM AREA DRAIN ABOVE.
2. 8" STORM DOWN.
3. 1" COLD WATER FROM BELOW 3/4" COLD WATER UP.
4. FIRE MAIN FROM BELOW AND UP. 2" VENT UP.
5. 2" VENT FROM BELOW.

FINK ROBERTS & PETRIE, INC.
Consulting Engineers
4040 Vincennes Circle Suite 300
Indianapolis, Indiana 46268

Eddy Street Commons
Phase II
Parking Garage
Project Number 108-004

Owner
City of South Bend, Indiana

Construction Manager
Kite Realty Group
30 South Meridian Street, Suite 1100
Indianapolis, Indiana 46204
317-577-5600

Structural Engineer
Fink, Roberts & Petrie, Inc.
4040 Vincennes Circle, Suite 300
Indianapolis, Indiana 46268
317-872-8400

Architect
Looney Ricks Kiss
175 Toyota Plaza, Suite 600
Memphis, Tennessee 38103
901-521-1440

Mechanical, Electrical & Plumbing Engineer
Circle Design Group
3510 South East Street, Suite F
Indianapolis, Indiana 46227
317-781-6200

Parking Consultant
Walker Parking Consultants
6602 East 75th Street, Suite 210
Indianapolis, Indiana 46250
317-842-6800

Civil Engineer/Landscape Architect
The Troyer Group
330 Union Street
Mishawaka, Indiana 46554
574-259-9376

100% Construction Documents
January 23, 2008

REVISION DATE	REVISION DESCRIPTION

CERTIFIED BY

JEFFERY L. MYERS
No. 870242
STATE OF INDIANA
PROFESSIONAL ENGINEER

JOB NO.	DRAWN BY	CHECKED BY
07098	R. MERTENS	C. CHAMPION

SHEET TITLE
FLOOR PLAN - THIRD LEVEL
PLUMBING AND FIRE PROTECTION

SHEET NO.
P205

G:\Users\CHAMPC\ Plotted By: Thursday, January 24, 2008 - 10:00am Last Edited: 1/22/08--3:41pm

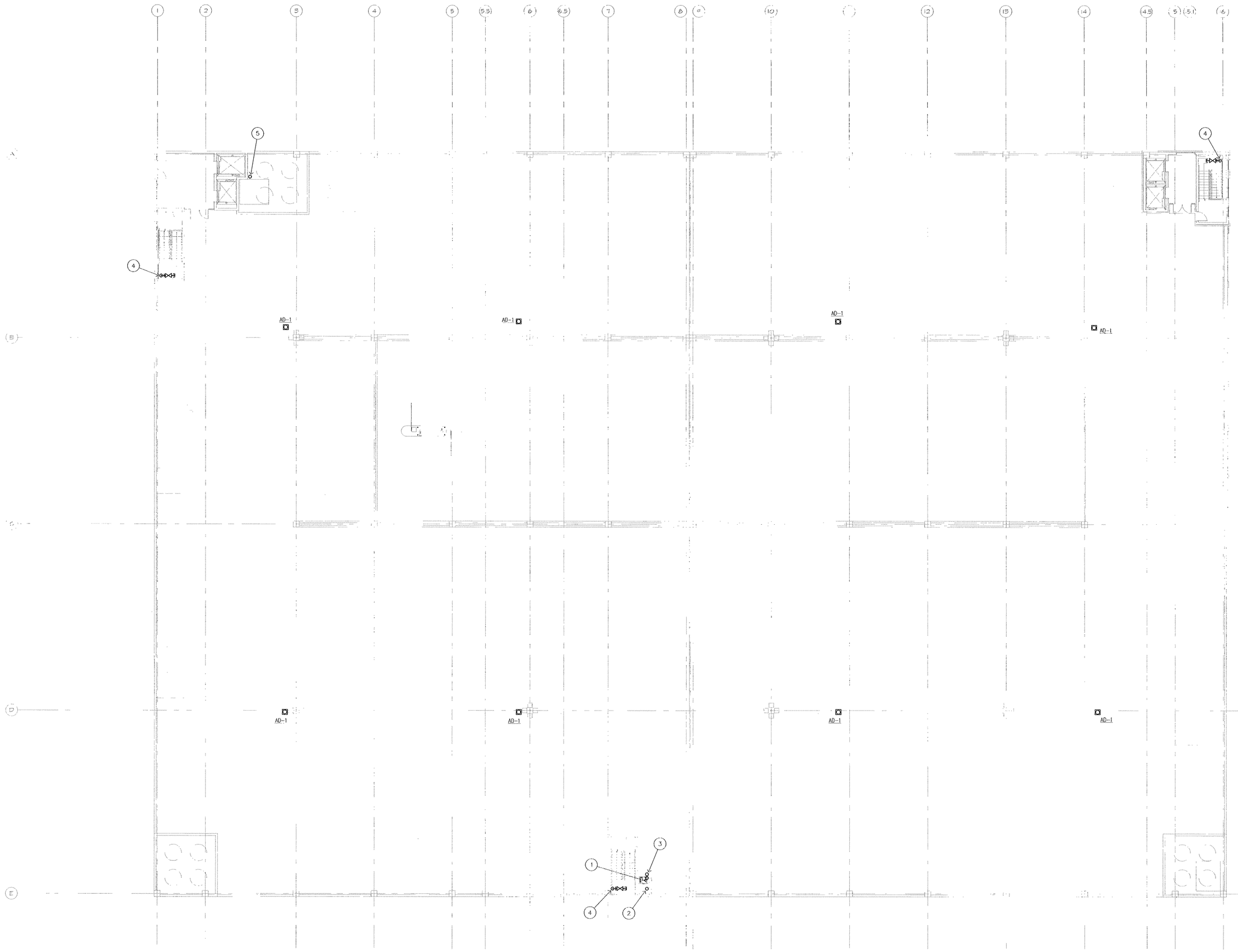

FLOOR PLAN - FOURTH LEVEL - PLUMBING AND FIRE PROTECTION

SCALE: 1/16" = 1'-0"

GENERAL NOTES:

1. TRASH CHUTE SPRINKLER SYSTEM- CHUTE SHALL BE PROTECTED INTERNALLY BY AUTOMATIC DRY SPRINKLER HEADS. THIS REQUIRES A SPRINKLER HEAD ABOVE THE TOP INTAKE DOOR OF THE CHUTE, A SPRINKLER HEAD AT THE SECOND LEVEL AND A SPRINKLER HEAD AT THE FIRST LEVEL.

PLAN NOTES:

1. SPRINKLER HEAD ABOVE TRASH CHUTE DOOR. COORDINATE WITH TRASH CHUTE MANUFACTURER.
2. 3/4" COLD WATER FROM BELOW. CONNECT TO TRASH CHUTE DISINFECTING/ SANITIZING SYSTEM PER TRASH CHUTE MANUFACTURER'S INSTRUCTION.
3. 2" VENT, FIRE MAIN FROM BELOW. 2" VENT UP TO 3" VENT THRU ROOF.
4. 4" DRY STANDPIPE WITH 2 1/2" ANGLE VALVE, CAP AND CHAIN AT 42" ABOVE LANDING.
5. 4" PLUMBING VENT THRU ROOF. SUPPORT VENT FROM WALL OF EXHAUST FAN ENCLOSURE AND TERMINATE 12" ABOVE PARAPET.

FINK ROBERTS & PETRIE, INC.
Consulting Engineers
4040 Vincennes Circle
Indianapolis, Indiana 46268

Eddy Street Commons
Phase II
Parking Garage
Project Number 108-004

Owner
City of South Bend, Indiana

Construction Manager
Kite Realty Group
30 South Meridian Street, Suite 1100
Indianapolis, Indiana 46204
317-577-5600

Structural Engineer
Fink, Roberts & Petrie, Inc.
4040 Vincennes Circle, Suite 300
Indianapolis, Indiana 46268
317-872-8400

Architect
Looney Ricks Kiss
175 Toyota Plaza, Suite 600
Memphis, Tennessee 38103
901-521-1440

Mechanical, Electrical & Plumbing Engineer
Circle Design Group
5510 South East Street, Suite F
Indianapolis, Indiana 46227
317-781-0200

Parking Consultant
Walker Parking Consultants
6602 East 75th Street, Suite 310
Indianapolis, Indiana 46250
317-842-6890

Civil Engineer/Landscape Architect
The Troyer Group
550 Union Street
Mishawaka, Indiana 46554
574-259-9576

100% Construction Documents
January 23, 2008

REVISION DATE	REVISION DESCRIPTION

CERTIFIED BY

DRAWN BY	CHECKED BY
07098	R. MERTENS
	S. CHAMPION

SHEET TITLE
FLOOR PLAN - FOURTH LEVEL
PLUMBING AND FIRE PROTECTION

SHEET NO.
P206

Q:\Level\2108\ Plotted By Time of Plot:1/23/08--10:00am Last Edited: 1/22/08--3:24pm

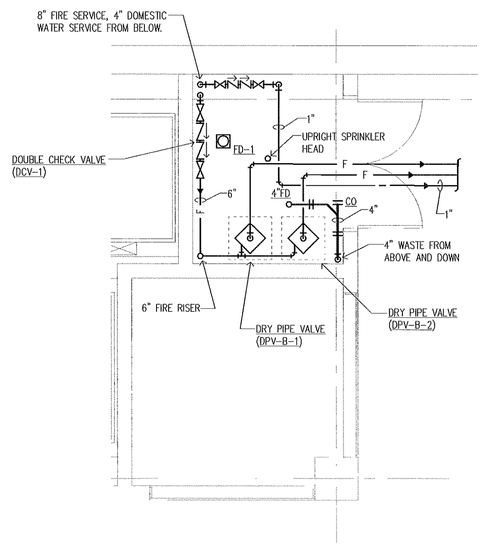

ENLARGED BASEMENT SPRINKLER ROOM

SCALE: 1/4" = 1'-0"

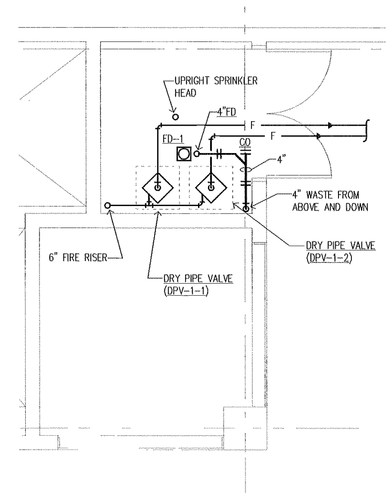

ENLARGED FIRST FLOOR SPRINKLER ROOM

SCALE: 1/4" = 1'-0"

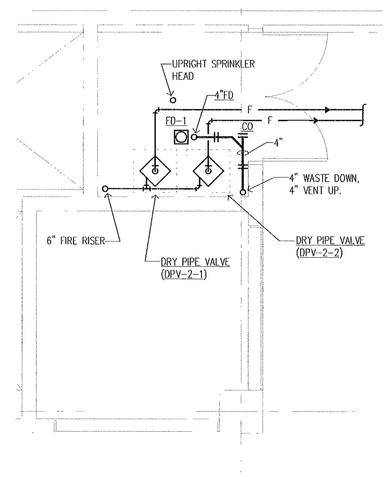

ENLARGED SECOND FLOOR SPRINKLER ROOM

SCALE: 1/4" = 1'-0"

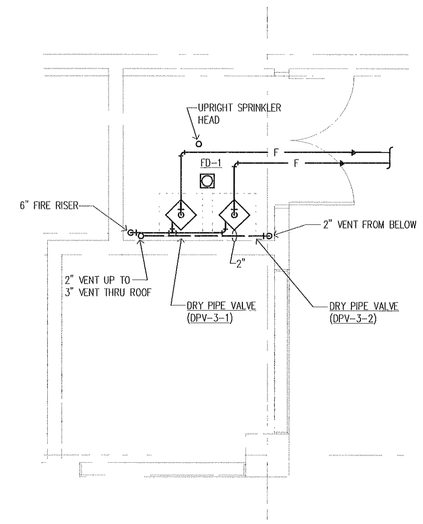

ENLARGED THIRD FLOOR SPRINKLER ROOM

SCALE: 1/4" = 1'-0"

FINK ROBERTS & PETRIE, INC.
Consulting Engineers
4040 Vincennes Circle Suite 300
Indianapolis, Indiana 46268

Eddy Street Commons
Phase II
Parking Garage
Project Number 108-004

Owner
City of South Bend, Indiana

Construction Manager
Kite Realty Group
30 South Meridian Street, Suite 1100
Indianapolis, Indiana 46204
317-577-5600

Structural Engineer
Fink, Roberts & Petrie, Inc.
4040 Vincennes Circle, Suite 300
Indianapolis, Indiana 46268
317-872-8400

Architect
Looney Ricks Kiss
175 Toyota Plaza, Suite 600
Memphis, Tennessee 38103
901-521-1440

Mechanical, Electrical & Plumbing Engineer
Circle Design Group
5510 South East Street, Suite F
Indianapolis, Indiana 46227
317-781-6200

Parking Consultant
Walker Parking Consultants
6602 East 75th Street, Suite 210
Indianapolis, Indiana 46250
317-842-6890

Civil Engineer/Landscape Architect
The Troyer Group
550 Union Street
Mishawaka, Indiana 46554
574-259-9976

100% Construction Documents
January 23, 2008

REVISION DATE	REVISION DESCRIPTION

CERTIFIED BY

JEFFERY L. MYERS
No. 870242
STATE OF INDIANA
REGISTERED PROFESSIONAL ENGINEER

DRAWN BY	CHECKED BY
07009	R. MERTENS
	G. CHAMPION

SHEET TITLE
ENLARGED PLANS - PLUMBING AND FIRE PROTECTION

SHEET NO.
P301

G:\plans\07009\ Plotted By: Thom at Plot:(25.00-0.00mm Last Edited: (725.00-3.00mm

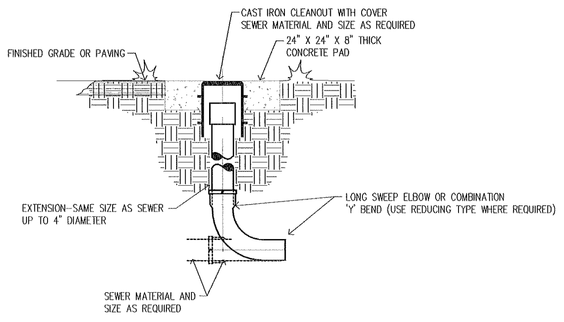

EXTERIOR CLEANOUT DETAIL A

NO SCALE

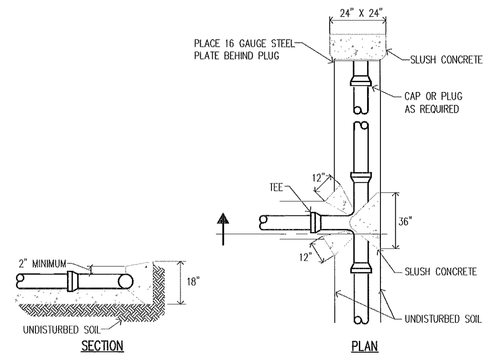

WATER MAIN SUPPORT AND THRUST BLOCK DETAIL B

NO SCALE

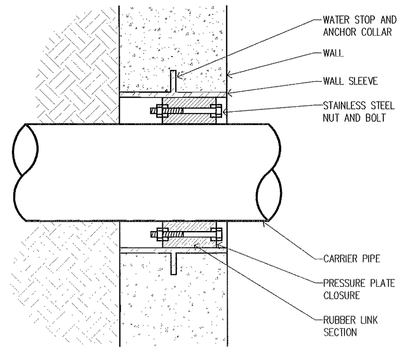

EXTERIOR WALL SLEEVE DETAIL C

NO SCALE

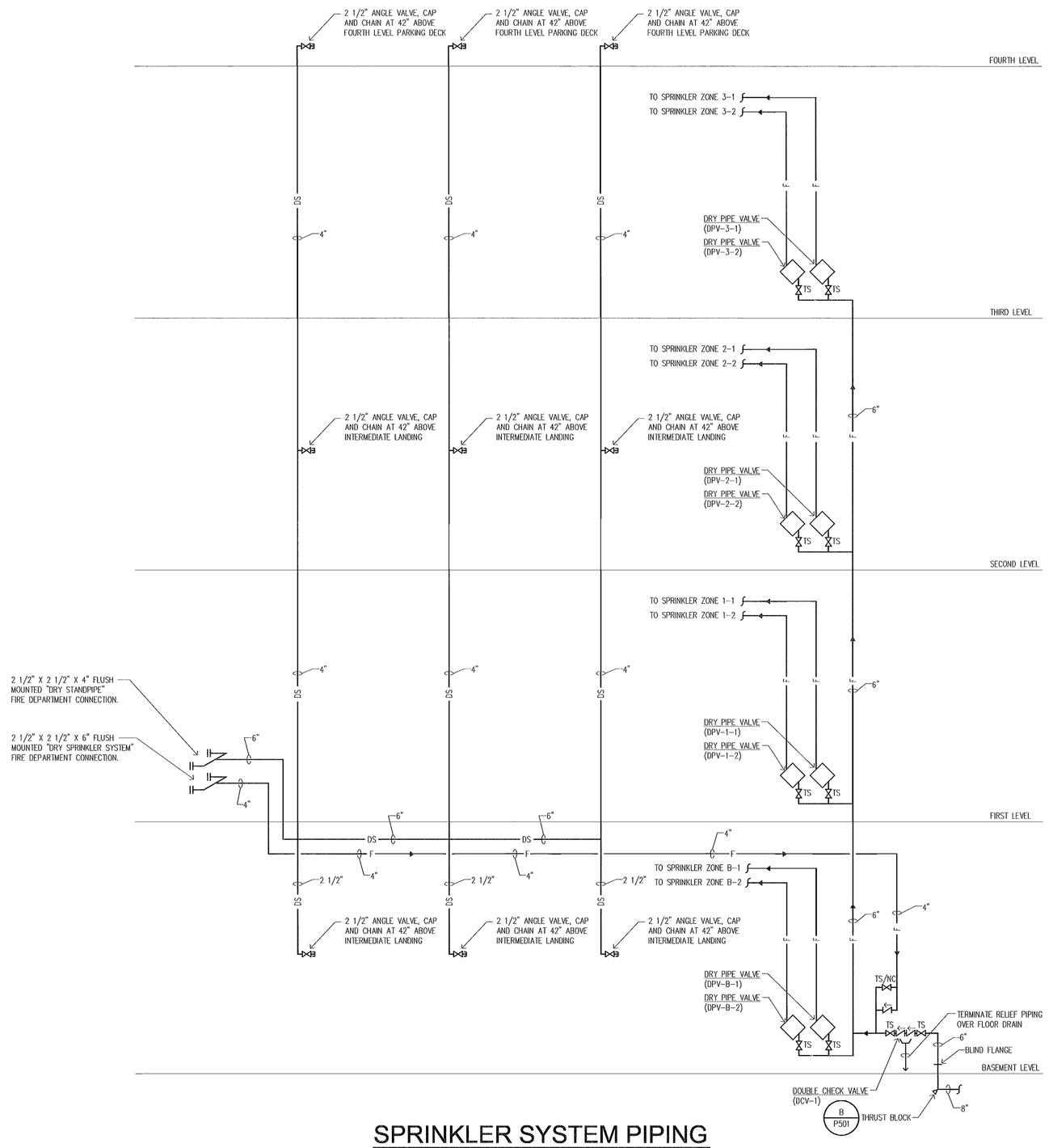

SPRINKLER SYSTEM PIPING DIAGRAM D

NO SCALE

PLUMBING FIXTURE ROUGH-IN SCHEDULE

ITEM	DESCRIPTION/MODEL	ROUGH-IN CONNECTIONS					
		COLD WATER	HOT WATER	TRAP	WASTE	VENT	FINISHED HEIGHT
P-10	HOSE BIBB (SIMILAR TO WOODFORD MODEL 24)	3/4"	--	--	--	--	24"

DRAINAGE FITTING SCHEDULE

ITEM	MAKE/MODEL	DESCRIPTION	LOCATION
FD-1	ZURN #Z550	CAST IRON BODY, FLASHING COLLAR, CAST IRON ROUND GRATE, SEDIMENT BUCKET, NO-HUB BOTTOM OUTLET	MECHANICAL ROOM
AD-1	ZURN #Z535	HEAVY DUTY ACID RESISTANT EPOXY COATED ALUMINUM BODY, SQUARE HEAVY DUTY ANTI-TILT HINGED SLOTTED GRATE WITH STAINLESS STEEL HINGE PINS, SEDIMENT BUCKET	PARKING GARAGE

FIRE PROTECTION EQUIPMENT SCHEDULE

ITEM	MANUFACTURER MODEL NUMBER	DESCRIPTION	CAPACITY	ELECTRICAL REQUIREMENTS	REMARKS
DOUBLE CHECK VALVE ASSEMBLY (DCV-1)	AMES COMPANY MODEL 2000SS	TWO INDEPENDENTLY OPERATED, SPRING LOADED, CAM-CHECK VALVES	225 GPM AT 3 PSI PRESSURE DROP		

FINK ROBERTS & PETRIE, INC.
Consulting Engineers
4040 Vincennes Circle Suite 300
Indianapolis, Indiana 46268

Eddy Street Commons
Phase II
Parking Garage
Project Number 108-004

Owner
City of South Bend, Indiana

Construction Manager
Kite Realty Group
30 South Meridian Street, Suite 1100
Indianapolis, Indiana 46204
317-577-5600

Structural Engineer
Fink, Roberts & Petrie, Inc.
4040 Vincennes Circle, Suite 300
Indianapolis, Indiana 46268
317-872-8400

Architect
Looney Ricks Kiss
175 Toyota Plaza, Suite 600
Memphis, Tennessee 38103
901-521-1440

Mechanical, Electrical & Plumbing Engineer
Circle Design Group
5510 South East Street, Suite F
Indianapolis, Indiana 46227
317-781-6200

Parking Consultant
Walker Parking Consultants
6602 East 75th Street, Suite 210
Indianapolis, Indiana 46250
317-842-6890

Civil Engineer/Landscape Architect
The Troyer Group
550 Union Street
Mishawaka, Indiana 46554
574-259-9976

100% Construction Documents
January 23, 2008

REVISION DATE	REVISION DESCRIPTION

CERTIFIED BY
STEVEN L. PETRIE
REGISTERED
No. 870242
STATE OF INDIANA
PROFESSIONAL ENGINEER

ISSUED DATE	JOB NO.	DRAWN BY	CHECKED BY
	07098	R. MERTENS	S. CHAMPION

SHEET TITLE
DETAILS, DIAGRAMS AND SCHEDULES - PLUMBING AND FIRE PROTECTION

SHEET NO.
P501

© Yuma\07098\ Plotted By: Thea of Plot:12/05-8:59am Last Edited: 12/29/08-8:59am

G:\hvac\07098\H201.dwg, 1/23/2008 9:38:31 AM, Bill Nord
Plotted By: Time of Plot: (23)-Jan-8:38am Last Edited: (23)-Jan-8:38am
G:\hvac\07098\H201.dwg, 1/23/2008 9:38:31 AM, Bill Nord

FLOOR PLAN - BASEMENT LEVEL - HVAC

SCALE: 1/16" = 1'-0"

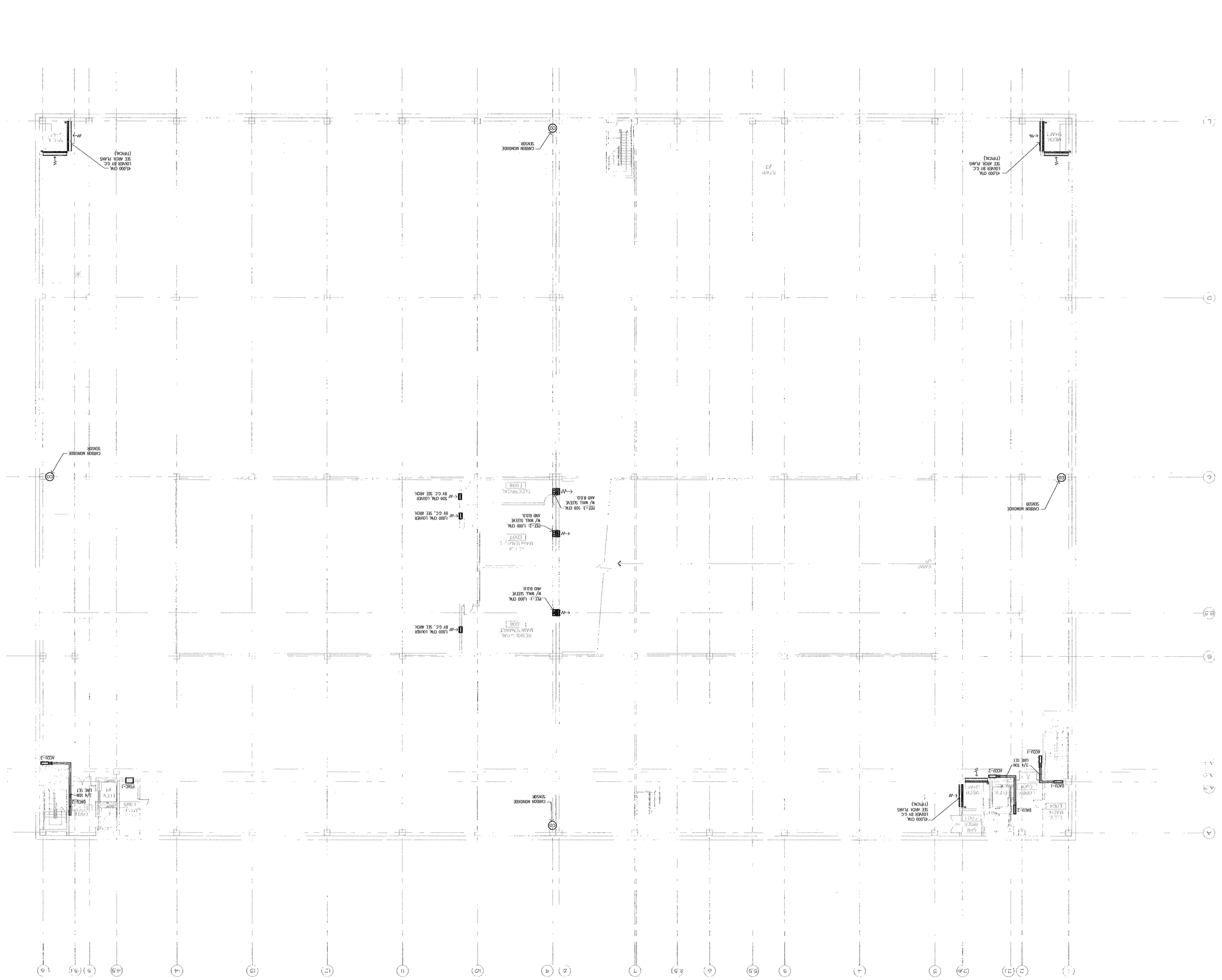

G:\hvac\07098\ Plotted By: Time of Plot:1/23/08-9:38am Last Edited: 1/21/08-4:52pm

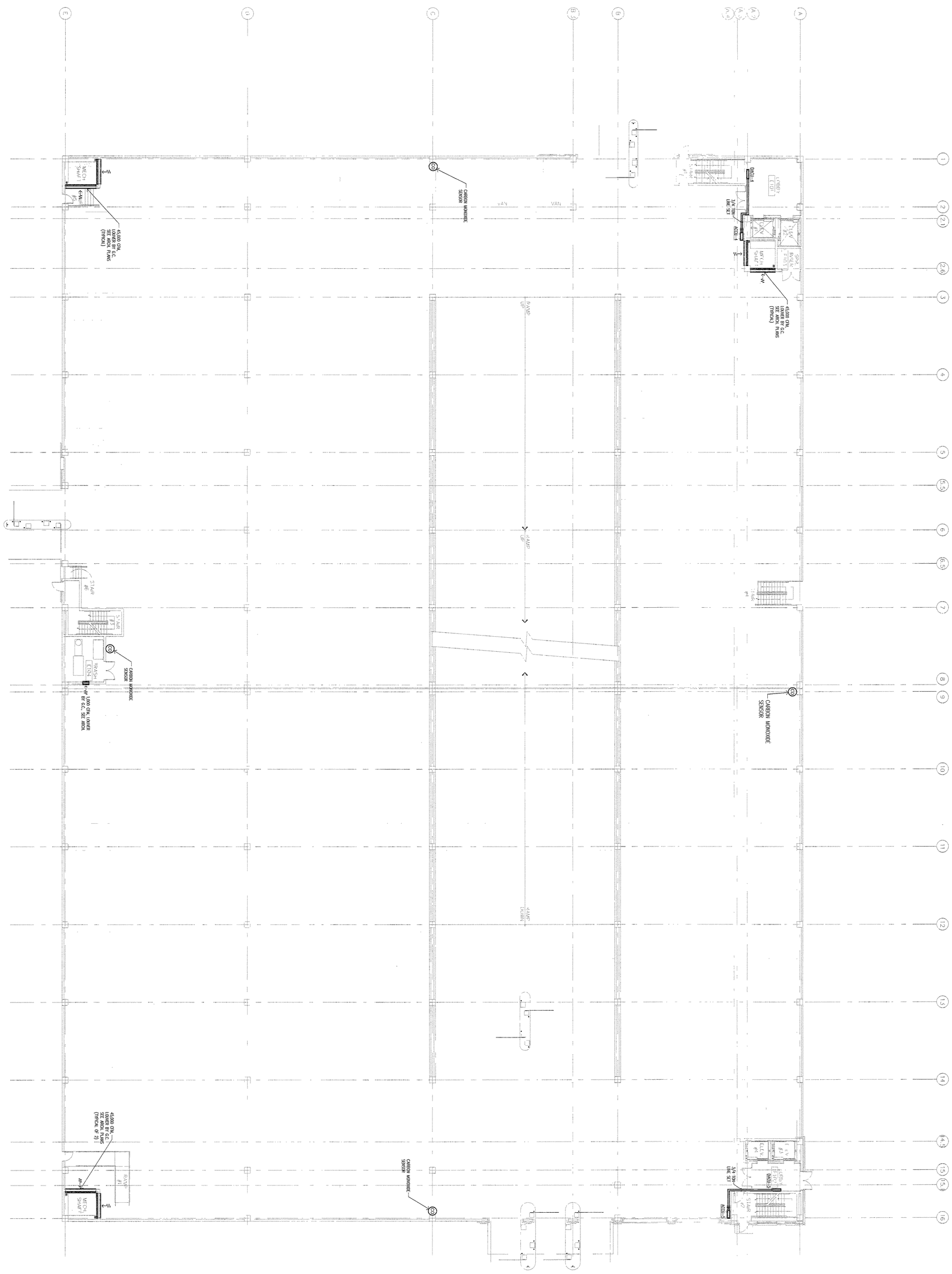

FLOOR PLAN - GROUND LEVEL - HVAC

SCALE: 1/16" = 1'-0"

SHEET NO.	SHEET TITLE	DESIGN DATE	CERTIFIED BY	REVISION DATE	REVISION DESCRIPTION
H202	FLOOR PLAN - GROUND LEVEL - HVAC	DESIGN PROJECT NO. 07098 DESIGN DRAWN BY KEN YAGER CHECKED BY JEFF WYLIE	JEFFERY L. WYLIE REGISTERED No. 870242 STATE OF INDIANA PROFESSIONAL ENGINEER		

100% Construction Documents
January 23, 2008

Civil Engineer/Landscape Architect
The Troyer Group
550 Union Street
Mishawaka, Indiana 46554
574-259-9976

Parking Consultant
Walker Parking Consultants
6602 East 75th Street, Suite 210
Indianapolis, Indiana 46250
317-842-6890

Mechanical, Electrical & Plumbing Engineer
Circle Design Group
5510 South East Street, Suite F
Indianapolis, Indiana 46227
317-781-6200

Architect
Looney Ricks Kiss
175 Toyota Plaza, Suite 600
Memphis, Tennessee 38103
901-521-1440

Structural Engineer
Fink, Roberts & Petrie, Inc.
4040 Vincennes Circle, Suite 300
Indianapolis, Indiana 46268
317-872-8400

Construction Manager
Kite Realty Group
30 South Meridian Street, Suite 1100
Indianapolis, Indiana 46204
317-577-5600

Owner
City of South Bend, Indiana

Eddy Street Commons
Phase II
Parking Garage
Project Number 108-004

FINK ROBERTS & PETRIE, INC.
Consulting Engineers
4040 Vincennes Circle Suite 300
Indianapolis, Indiana 46268

G:\hvac\07098\H203.dwg, 1/23/2008 9:39:07 AM, Bill Nord

G:\hvac\07098\ Plotted By: Time of Plot:1/23/08-8:39am Last Edited: 1/21/08-12:05pm

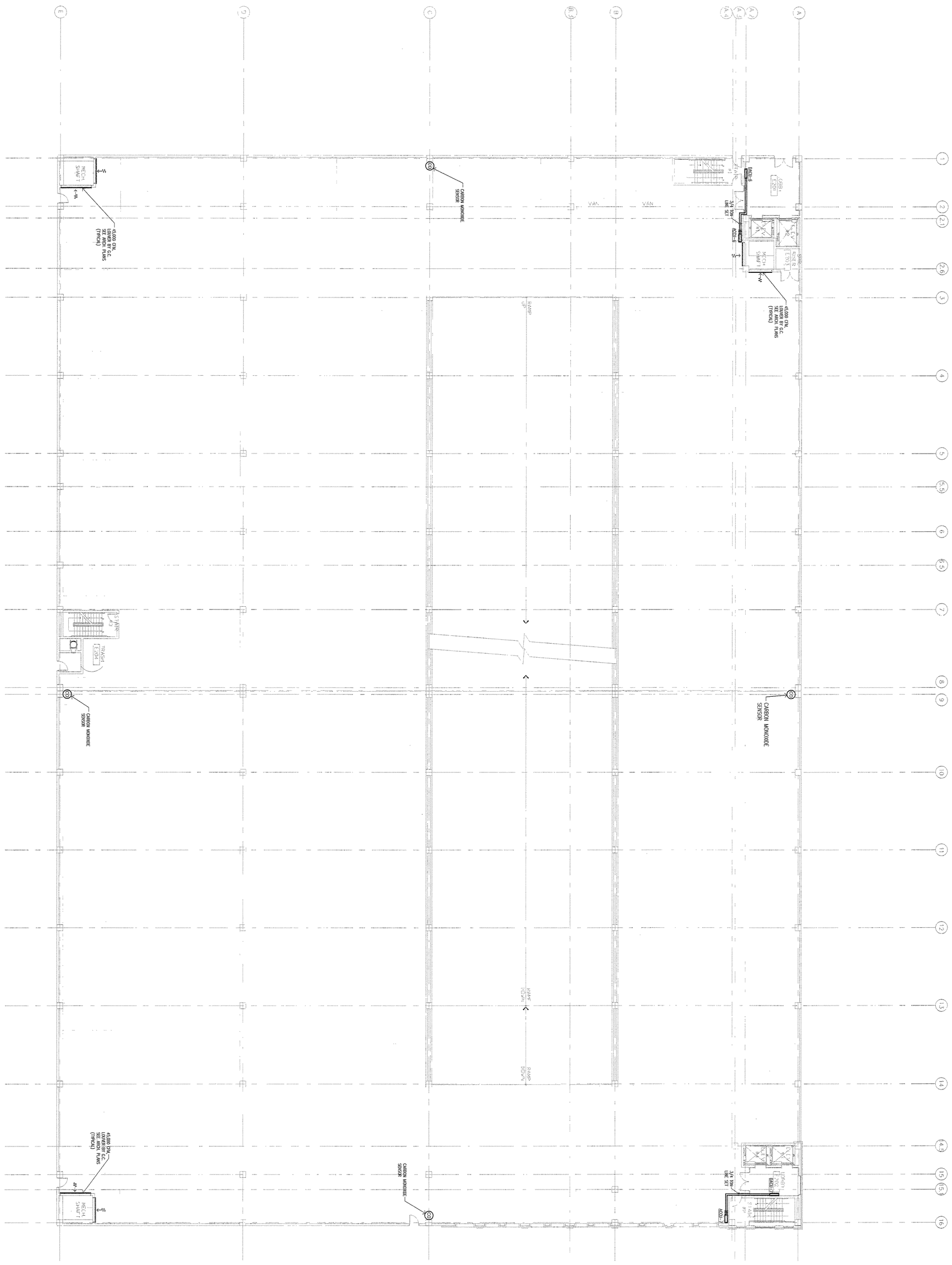

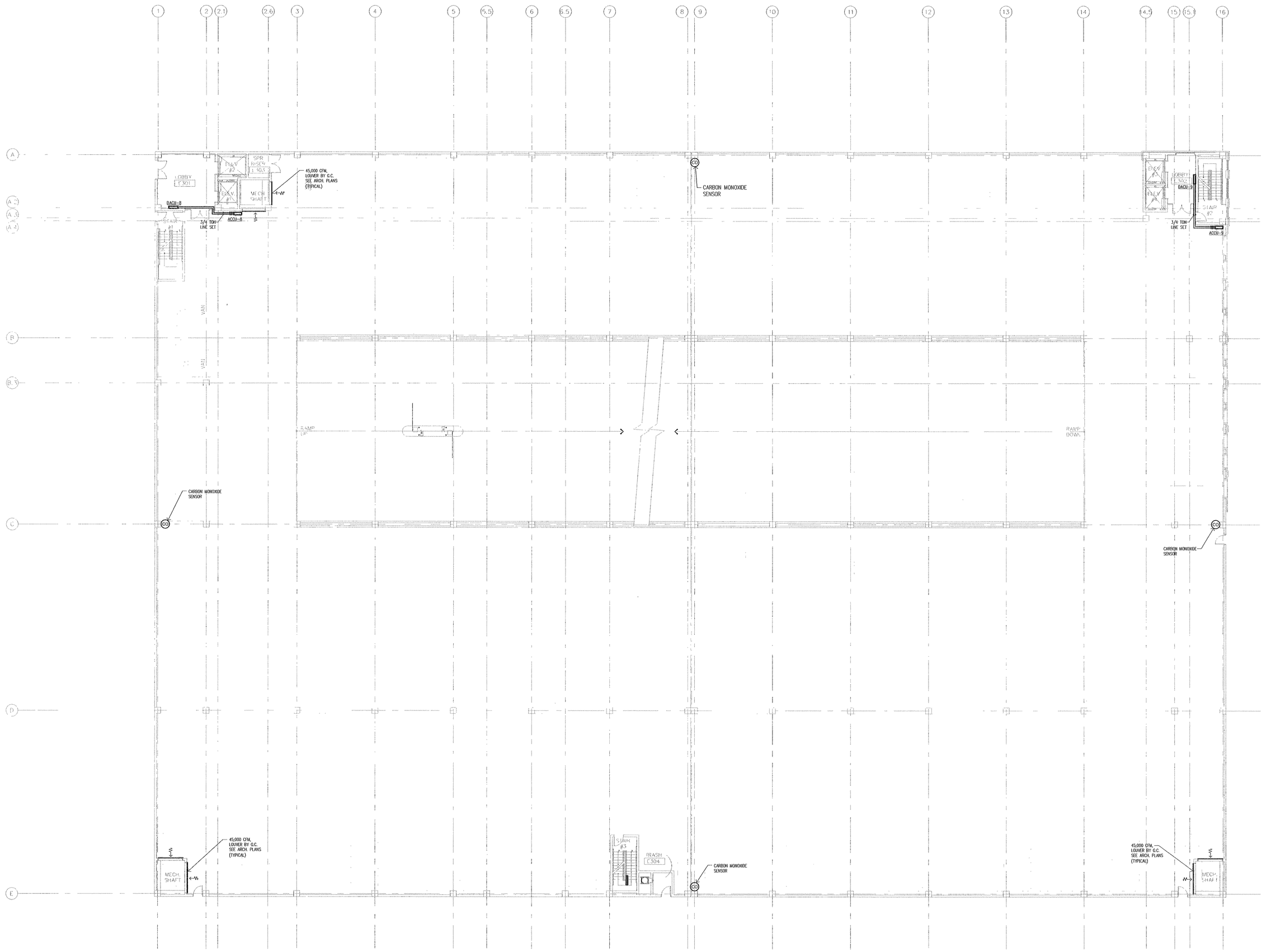

FLOOR PLAN - THIRD LEVEL - HVAC

SCALE: 1/16" = 1'-0"

FINK ROBERTS & PETRIE, INC.
Consulting Engineers
4040 Vincennes Circle Suite 300
Indianapolis, Indiana 46268

Eddy Street Commons
Phase II
Parking Garage
Project Number 108-004

Owner
City of South Bend, Indiana

Construction Manager
Kite Realty Group
30 South Meridian Street, Suite 1100
Indianapolis, Indiana 46204
317-577-5600

Structural Engineer
Fink, Roberts & Petrie, Inc.
4040 Vincennes Circle, Suite 300
Indianapolis, Indiana 46268
317-872-8400

Architect
Looney Ricks Kiss
175 Toyota Plaza, Suite 600
Memphis, Tennessee 38103
901-521-1440

Mechanical, Electrical & Plumbing Engineer
Circle Design Group
5510 South East Street, Suite F
Indianapolis, Indiana 46227
317-781-6200

Parking Consultant
Walker Parking Consultants
6602 East 75th Street, Suite 210
Indianapolis, Indiana 46250
317-842-6890

Civil Engineer/Landscape Architect
The Troyer Group
550 Union Street
Mishawaka, Indiana 46554
574-259-9976

100% Construction Documents
January 23, 2008

REVISION DATE | REVISION DESCRIPTION

CERTIFIED BY

JEFFERY L. WYLIE
REGISTERED
No. 870242
STATE OF INDIANA
PROFESSIONAL ENGINEER

DESIGN DATE

DRAWING NO. 07098
DRAWN BY KEN YAGER
CHECKED BY JEFF WYLIE

SHEET TITLE
FLOOR PLAN - THIRD LEVEL - HVAC

SHEET NO.
H204

G:\hvac\07098\H204.dwg, 1/23/2008 9:39:27 AM, Bill Nord

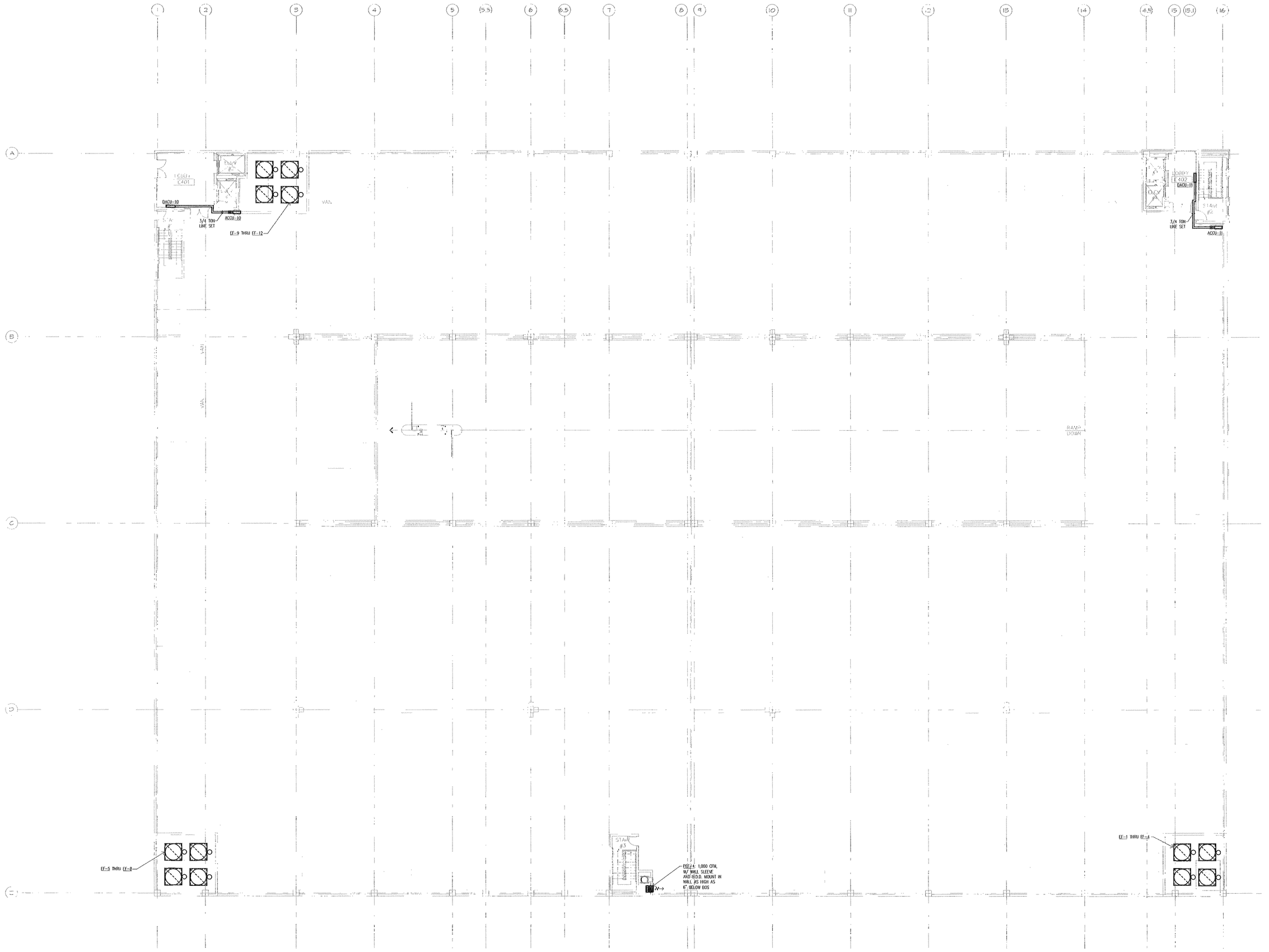

FLOOR PLAN - FOURTH LEVEL - HVAC

SCALE: 1/16" = 1'-0"

FINK ROBERTS & PETRIE, INC.
Consulting Engineers
4040 Vincennes Circle Suite 300
Indianapolis, Indiana 46268

Eddy Street Commons
Phase II
Parking Garage
Project Number 108-004

Owner
City of South Bend, Indiana

Construction Manager
Kite Realty Group
30 South Meridian Street, Suite 1100
Indianapolis, Indiana 46204
317-577-5600

Structural Engineer
Fink, Roberts & Petrie, Inc.
4040 Vincennes Circle, Suite 300
Indianapolis, Indiana 46268
317-872-8400

Architect
Looney Ricks Kiss
175 Toyota Plaza, Suite 600
Memphis, Tennessee 38103
901-521-1440

Mechanical, Electrical & Plumbing Engineer
Circle Design Group
5510 South East Street, Suite F
Indianapolis, Indiana 46227
317-781-6200

Parking Consultant
Walker Parking Consultants
6602 East 75th Street, Suite 210
Indianapolis, Indiana 46250
317-842-6890

Civil Engineer/Landscape Architect
The Troyer Group
550 Union Street
Mishawaka, Indiana 46554
574-259-9976

100% Construction
Documents
January 23, 2008

REVISION DATE | REVISION DESCRIPTION

CERTIFIED BY

JEFFERY L. WYLIE
REGISTERED
No. 870242
STATE OF INDIANA
PROFESSIONAL ENGINEER

DESIGN DATE
07098
DRAWN BY
KEN YAGER
CHECKED BY
JEFF WYLIE

SHEET TITLE
FLOOR PLAN - FOURTH LEVEL - HVAC

SHEET NO.
H205

G:\hvac\07098\H205.dwg, 1/23/2008 9:39:50 AM, Bill Nord

AIR HANDLING UNIT SCHEDULE

UNIT NUMBER	TYPE	EQUIPMENT ARRANGEMENT	MANUFACTURER & MODEL NUMBER	FAN DATA		COOLING CAPACITY							HEATING CAPACITY					ELECTRICAL					FILTERS NO./SIZE	MINIMUM OUTSIDE AIR CFM	WEIGHT (LBS.)	REMARKS
				CFM	ESP	TOTAL MBH	SENSIBLE MBH	EAT db / EAT wb	LEAVING DB (°F)	SST (°F)	AMBIENT TEMP. (° F)	NUMBER OF ROWS	MBH	EAT DB (°F)	LAT DB (°F)	KW	STAGES	CONTROL	HP	MCA	VOLT	PHASE	DISCONNECT SWITCH				
				RPM	BHP																					
DACU-1 THRU DACU-11	DUCTLESS AIR CONDITION UNIT	HORZONTAL DRAW-THRU	MITSUBISHI MSZ-A12NA	360	0.0	12.6	12.6	75 / 62	55	45	95	1	13.5	45	95	–	1	REMOTE	–	1.0	208	1	YES	1/SPECIAL	NA	31	PROVIDE WITH REFRIGERANT LINE SET & DRAIN LINE
				–	NA																					

FAN SCHEDULE

UNIT NUMBER	NAME	SERVES	TYPE	MANUFACTURER & MODEL NUMBER	FAN DATA			ELECTRICAL DATA				ACCESSORIES					WEIGHT (LBS.)	REMARKS
					CFM	S.P.	MAXIMUM SONE RATING	HP	VOLT	PHASE	DISCONNECT SWITCH	ROOF CURB	VIBRATION ISOLATORS	BIRD SCREEN	BACKDRAFT DAMPER			
					RPM	BHP									TYPE	SIZE		
EF-1 THRU EF-12	EXHAUST FAN	BASEMENT THRU 4TH FLR	MED. PRESSURE VANE AXIAL	GREENHECK TBI-CA-SL60	60,000	2.5	NA	75	460	3	YES	YES	NO	NO	GRAVITY	60"ø	950	ROOF CURB, BUTTERFLY DAMPER
					1041	57.1												
PEF-1, 2 AND PEF-4	EXHAUST FAN	BASEMENT	PROPELLER WALL FAN	GREENHECK SBDH-3H24	1000	0.5	16.3	1/3	120	1	YES	YES	NO	YES	GRAVITY	26"X26"	90	WALL SLEEVE, DAMPER, ON/OFF SWITCH
					938	0.31												
PEF-3	EXHAUST FAN	BASEMENT	PROPELLER WALL FAN	GREENHECK SBE-1H20	500	0.5	14.7	1/4	120	1	YES	YES	NO	YES	GRAVITY	22"X22"	60	WALL SLEEVE, DAMPER ON/OFF SWITCH
					921	.28												

AIR COOLED CONDENSING UNIT SCHEDULE

UNIT NUMBER	EQUIPMENT SERVED	MANUFACTURER & MODEL NUMBER	TOTAL MBH	DESIGN AMBIENT TEMPERATURE ° F	REFRIGERANT TYPE	MINIMUM STEPS OF CONTROL	ELECTRICAL						WEIGHT (LBS.)	REMARKS
							UNIT MCA	VOLTAGE	PHASE	COMPRESSOR NO.	COMPRESSOR RLA (EACH)	COND. FANS NO. / FLA (EACH)		
			MIN. EER											
ACCU-1 THRU ACCU-11	DACU-1 THRU DACU-11	MITSUBISHI MUA12WA	12.6	95	R-410	1	12.0	208	1	1	10.0	1 / .6	71	INTEGRAL POWER SOURCE FOR DACU-1, MOUNT UNIT ON WALL AT 56" A.F.F. WITH STRUCTURAL WALL BRACKET AND ANCHORS.
			10.1											

PACKAGED TERMINAL A/C UNIT SCHEDULE

MARK	MANUFACTURER & MODEL NUMBER	CFM	NOMINAL TOTAL COOLING CAPACITY (BTUH)	ELECTRICAL				HEATING COIL		REMARKS
				AMPS	VOLTS	PHASE CYCLE	DISCONNECT SWITCH	BTU/HR CAPACITY	KW	
PTAC-1	GE ZONLINE AZEBE09D	270	9,000	3.8	265	1	265V CORD	8,600	2.55	PROVIDE UNIT WITH SUB-BASE, JUNCTION BOX, 265 V CORD AND ARCHITECTURAL EXTERIOR LOUVER, AND OUTSIDE AIR OPTION, BALANCE OUTSIDE AIR TO 50 CFM.

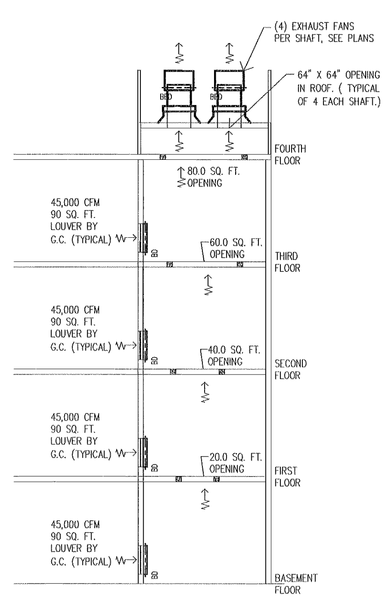

TYPICAL
CHASE DIAGRAM
SCALE: NTS

FINK ROBERTS & PETRIE, INC.
CONSULTING ENGINEERS
4040 Vincennes Circle Suite 300
Indianapolis, Indiana 46268

Eddy Street Commons
Phase II
Parking Garage
Project Number 108-004

Owner
City of South Bend, Indiana

Construction Manager
Kite Realty Group
30 South Meridian Street, Suite 1100
Indianapolis, Indiana 46204
317-577-5600

Structural Engineer
Fink, Roberts & Petrie, Inc.
4040 Vincennes Circle, Suite 300
Indianapolis, Indiana 46268
317-872-8400

Architect
Looney Ricks Kiss
175 Toyota Plaza, Suite 600
Memphis, Tennessee 38103
901-521-1440

Mechanical, Electrical & Plumbing Engineer
Circle Design Group
5510 South East Street, Suite F
Indianapolis, Indiana 46227
317-781-6200

Parking Consultant
Walker Parking Consultants
6602 East 75th Street, Suite 210
Indianapolis, Indiana 46250
317-842-6880

Civil Engineer/Landscape Architect
The Troyer Group
550 Union Street
Mishawaka, Indiana 46554
574-259-9976

100% Construction Documents
January 23, 2008

REVISION DATE	REVISION DESCRIPTION

CERTIFIED BY
JEFFREY L. WYLIE
No. 870242
STATE OF INDIANA
REGISTERED PROFESSIONAL ENGINEER

ISSUE DATE	
PROJECT NO.	07098
DRAWN BY	KEN YAGER
CHECKED BY	JEFF WYLIE

SHEET TITLE
SCHEDULES AND DETAILS - HVAC

SHEET NO.
H501

G:\hvac\07098\H501.dwg, 1/23/2008 9:40:09 AM, Bill Nord
G:\work\07098\ Plotted By: Thom at Fink\25/08-8:40am Last Edited: 1/25/08-4:13pm

STANDARD ELECTRICAL ABBREVIATIONS

AC	ALTERNATING CURRENT	MCB	MAIN CIRCUIT BREAKER
AUX	AUXILIARY CONTACTS	MC	MECHANICAL CONTRACTOR
AFF	ABOVE FINISH FLOOR	MCC	MOTOR CONTROL CENTER
AFG	ABOVE FINISH GRADE	MFR	MANUFACTURER
AHU	AIR HANDLING UNIT	MH	MANHOLE
AMP	AMPERE	MLO	MAIN LUGS ONLY
ATS	AUTOMATIC TRANSFER SWITCH	MMS	MANUAL MOTOR STARTER
BFG	BELOW FINISHED GRADE	MS	MAGNETIC STARTER
C	CONDUIT	MTS	MANUAL TRANSFER SWITCH
CCT	CONTROL CIRCUIT TRANSFORMER	NF	NON-FUSED
CCTV	CLOSED CIRCUIT TELEVISION	NL	NIGHT LIGHT
CB	CIRCUIT BREAKER	NTS	NOT TO SCALE
CMS	COMBINATION MAGNETIC STARTER	N/L	UNSWITCHED NIGHT LIGHT
CONT	CONTACTOR	OL	OVERLOADS
CP	CONTROL PACKAGE	OP	OVERCURRENT PROTECTION
CU	CONDENSING UNIT	PB	PUSHBUTTON
CUH	CABINET UNIT HEATER	PE	PNEUMATIC-ELECTRIC SWITCH
DC	DIRECT CURRENT	PL	PILOT LIGHT
DISC	DISCONNECT SWITCH	PUH	PROPELLER UNIT HEATER
EC	ELECTRICAL CONTRACTOR	PVC	POLYVINYLCHLORIDE CONDUIT
EF	EXHAUST FAN	#	PHASE
EMERG	EMERGENCY	QUAN	QUANTITY
EMT	ELECTRICAL METALLIC TUBING	R	RELOCATED
EP	ELECTRIC-PNEUMATIC SWITCH	RA	RIGID ALUMINUM CONDUIT
EWC	ELECTRIC WATER COOLER	RECEPT.	RECEPTACLE
EX	EXISTING TO REMAIN	RF	RETURN FAN
EXIST.	EXISTING	RGS	RIGID GALVANIZED STEEL CONDUIT
EXR	EXISTING TO BE REMOVED	SF	SUPPLY FAN
F	FUSED	SN	SOLID NEUTRAL
FA	FIRE ALARM	SW	SWITCH
FMS	FLEXIBLE METAL CONDUIT	SW & F	SWITCH & FUSE
G	GROUND WIRE	T	THERMOSTAT
GC	GENERAL CONTRACTOR	TC	TIME CLOCK
GFI	GROUND FAULT INTERRUPTER	TCC	TEMPERATURE CONTROL CONTRACTOR
HOA	HAND-OFF-AUTO SELECTOR SWITCH	TTB	TELEPHONE TERMINAL BOARD
HP	HORSEPOWER	TTC	TELEPHONE TERMINAL CABINET
Hz	HERTZ	TX	POWER TRANSFORMER
IC	INTERRUPTING CURRENT	V	VOLT
IMC	INTERMEDIATE METAL CONDUIT	W	WIRE OR WATT
INT	INTERLOCK	WM	WIREMOLD
KEC	KITCHEN EQUIPMENT CONTRACTOR	WP	WEATHER PROTECTED
KW	KILOWATT	W/	WITH
LT	LIGHT	Δ	WIRING CONNECTED (DELTA)
LTS	LIGHTS	Y	WIRING CONNECTED (WYE)
MATV	MASTER ANTENNA TELEVISION		

ELECTRICAL SYMBOL SCHEDULE

MOUNTING CEIL	MOUNTING WALL	MOUNTING FL.	DESCRIPTION
▭	▭		FLUORESCENT FIXTURE (UPPERCASE LETTER IN QUOTES=TYPE, LOWERCASE LETTER =SWITCH LEG
◎	⌐		RECESSED DOWNLIGHT
▣	H▣		H. I. D. FIXTURE
◒			INCANDESCENT FIXTURE-DIRECTIONAL
▨			LIGHT FIXTURE ON EMERGENCY CIRCUIT
⊗	⊗		EXIT LIGHT, LINE INDICATES FACE. ⊗ |
			ARROW INDICATES FACE WITH ARROW ⊗↑
◻	⊂◇		SURFACE MOUNTED INCANDESCENT FIXTURE
⊖⊖	⊂▭		BATTERY PACK LIGHTS
⊖	⊖	⊖	SINGLE RECEPTACLE
	H⊖		SINGLE RECEPTACLE (+44" AFF)
⊖	⊖	⊖	DUPLEX CONVENIENCE OUTLET
	⊖GFI		DUPLEX CON. OUTLET – GFI PROTECTED
	⊖		DUPLEX CON. OUTLET (TOP HALF SWITCHED)
	H⊖		RECEPTACLE (+44" AFF)
⊕	⊕	⊕	QUADRUPLEX OUTLET
	H⊕		QUADRUPLEX OUTLET (+44" AFF)
	⊖S		SAFETY TYPE CONVENIENCE OUTLET
⊖E	⊖E		DUPLEX CONVENIENCE OUTLET (EMERGENCY)
	⊖WP		WEATHERPROOF CONVENIENCE OUTLET (GFI)
	H⊖WP		WEATHERPROOF CONVENIENCE OUTLET (GFI) (+44" AFF)
	⊕		208/240V OUTLET (SIZE AS NOTED)
	H⊕		208/240V OUTLET (SIZE AS NOTED)
	⊠		EXPLOSION PROOF CONVENIENCE OUTLET
	⊘		SPECIAL OUTLET (AS NOTED)
	H⊖C		ABOVE COUNTER VOICE/DATA OUTLET (+44")
	H◁	◁	VOICE/DATA OUTLET
	H◁	◁	TELEPHONE OUTLET (VOICE ONLY)
	H◁T		TELEPHONE OUTLET (VOICE ONLY) +60"
	H◁P		PUBLIC TELEPHONE OUTLET (VOICE ONLY) +48"
	H◁	◁	DATA OUTLET (DATA ONLY)
Ⓒ	HⒸ		CLOCK OUTLET
⊖	H⊖		CLOCK & CLOCK OUTLET
⊖S	H⊖S		DOUBLE FACE CLOCK & CLOCK OUTLET
	▤		MASTER CLOCK
	H▭	▭	CHIME
	AMP		SOUND SYSTEM AMPLIFIER
=▯=	=▯	◂▯	T.V. REMOTE CONTROL
=▯TV	=▯TV	◂▯TV	T.V. CAMERA OUTLET
CAM	CAM		CAMERA
	V		VOLUME CONTROL
	=▯P	◂▯P	PROJECTOR OUTLET (SYS. INPUTS)
Ⓢ	HⓈ		SPEAKER
◁	H◁		SPEAKER (HORN TYPE)
=▯=	=▯Ⓐ	◂▯Ⓐ	T.V. ANTENNA OUTLET
=▯=	=▯T	◂▯T	COMB. T.V. ANTENNA AND DUPLEX OUTLET
	H⊸		CALL-IN SWITCH
	⊢⊸	◂⊸	CIRCUIT LIFTING JACK
	◁IC		INTERCOM STATION
	◁IM		INTERCOM MASTER STATION
	=◀M	◂◀M	MICROPHONE OUTLET
	=H		HANDICAP DOOR PUSH PLATE
	▶E		EMERGENCY PANIC BUTTON
	FACC		FIRE ALARM CONTROL CABINET
	FAN		FIRE ALARM ANNUNCIATOR (REMOTE)
	FAG		FIRE ALARM ANNUNCIATOR (REMOTE AND GRAPHIC)
	DIR		DIGITAL DIALER
	F		FIRE ALARM PULL STATION
Ⓗ	HⒽ		FIRE ALARM HEAT DETECTOR (RATE OF RISE)
◇	H◇		FIRE ALARM SMOKE DETECTOR (PHOTO-ELECTRIC)
◇			FIRE ALARM SMOKE DETECTOR (PHOTO-ELECTRIC WITH DUCT-PROBE)
Ⓘ			FIRE ALARM SMOKE DETECTOR (IONIZATION WITH DUCT-PROBE)
◇	H◇		FLAME DETECTOR
Ⓘ	HⒾ		FIRE ALARM SMOKE DETECTOR (IONIZATION)
Ⓣ			FIRE ALARM TAMPER SWITCH
Ⓕ			FIRE ALARM FLOW SWITCH
	FF		FIRE FIGHTERS TELEPHONE JACK
	⊞		FIRE ALARM MAGNETIC DOOR ALARM CONTACTS
	DH		FIRE ALARM MAGNETIC DOOR HOLDER
	▟		FIRE ALARM DOOR HOLDER ROUGH-IN (IN HYDRAULIC DOOR CLOSER)
	FB		FIRE ALARM BELL/STROBE COMBINATION
L	HL		FIRE ALARM STROBE
S	HS		FIRE ALARM SPEAKER
	CH		FIRE ALARM CHIME
(15)	H(15)		FIRE ALARM INDICATING LAMP (REMOTE)
	(P)		FIRE ALARM EMERGENCY PUBLIC TELEPHONE AND CABINET
	CSL		FIRE ALARM CHIME/STROBE COMBINATION
SL	SL		FIRE ALARM SPEAKER/STROBE COMBINATION
	H◁		FIRE ALARM HORN/STROBE COMBINATION
	◻◁		FIRE ALARM HORN

MOUNTING CEIL	MOUNTING WALL	MOUNTING FL.	DESCRIPTION
	CON		CONTACTOR
	C		CAPACITOR
	ATS		AUTOMATIC TRANSFER SWITCH
	◪F		MANUAL STARTER (P = PILOT LIGHT)
	⊠		MAGNETIC MOTOR STARTER
	⊠M		COMBINATION MAGNETIC MOTOR STARTER
	▭▭▭		PUSHBUTTON STATION AS NOTED
	◻M		CIRCUIT BREAKER IN ENCLOSURE
	◻F		DISCONNECT SWITCH (NON-FUSED)
	◧F		DISCONNECT SWITCH (FUSED)
	S		SWITCH – SINGLE POLE
	S_2		SWITCH – 2 POLE
	S_3		SWITCH – 3 WAY
	S_4		SWITCH – 4 WAY
	S_P		SWITCH WITH PILOT LIGHT (ANY TYPE SW.)
	S_{WP}		SWITCH – WEATHERPROOF
	S_M		MOMENTARY CONTACT SWITCH
	S_T		MECHANICAL TIMER SWITCH
	S_K		KEYED SWITCH
	D		DIMMER SWITCH
	B		BUZZER
	B		BELL
(P)	H(P)		PHOTOCELL
			MOTOR – SINGLE PHASE
			MOTOR – 3 PHASE
			PLUGMOLD RACEWAY
	— WM —		WIREMOLD RACEWAY
			CONDUIT CONCEALED IN OR ABOVE CEILING
			CONDUIT EXPOSED
			CONDUIT CONCEALED IN OR BELOW FLOOR
			HOMERUN
			CONDUIT TURNED UP
			CONDUIT TURNED DOWN
			DIRECT BURIED CABLE
			–HOT –NEUTRAL –GROUND
			TWISTED PAIR CABLE
			CONDUIT STUBBED OUT & CAPPED
			CONDUIT STUBBED OUT WITH BUSHING
J	J	J	JUNCTION BOXES
			GROUND ROD & CONNECTION
T			THERMOSTAT
TX			TRANSFORMER
TC			TIME CLOCK
			48V D.C. EMERGENCY LIGHT
			ELECTRICAL DISTRIBUTION PANEL
			APPLIANCE PANEL
			SPECIAL PANEL AS NOTED (ELECT.)
			CIRCUIT BREAKER
			COIL (RELAY, CONTACTOR OR CONTROLLER)
			FUSE
			NORMALLY OPEN CONTACTS
			NORMALLY CLOSED CONTACTS
			NORMALLY OPEN MOMENTARY CONTACT
			NORMALLY CLOSED MOMENTARY CONTACT
			PILOT LIGHT
			SWITCH (MANUAL OR AS NOTED)
			TRANSFORMER
DET # SHT #			DETAIL REFERENCE
SEC # SHT #			SECTION REFERENCE

PROJECT ELECTRICAL GENERAL NOTES

1. VERIFY EXISTING CONDITIONS IN THE FIELD PRIOR TO BIDDING AND BEFORE BEGINNING WORK.
2. REVIEW THE WORK OF OTHER TRADES. COORDINATE AND PLAN WORK WITH THE OTHER TRADES. ADJUST AS A RESULT OF COORDINATION REVIEW COORDINATED EFFORTS WITH ENGINEER FOR APPROVAL.
3. STORE EQUIPMENT AND COMPONENTS IN A CLEAN, DRY LOCATION UNTIL READY FOR INSTALLATION. PROTECT FROM WEATHER, THEFT, DIRT, FUMES, WATER, CONSTRUCTION DEBRIS, ETC. AT ALL TIMES. ANY DAMAGED EQUIPMENT OR COMPONENT SHALL BE RESTORED AS NEW OR REPLACED.
4. ELECTRICAL DRAWINGS SHOW THE INTENDED ARRANGEMENT AND ROUTING OF ALL CONDUIT AND DEVICES. THEY SHALL BE FOLLOWED AS CLOSELY AS ACTUAL BUILDING CONSTRUCTION AND WORK OF OTHER TRADES WILL PERMIT.
5. PERFORM ALL WORK IN A SKILLED, PROFESSIONAL, MANNER MEETING THE ACCEPTANCE OF THE ENGINEER, ARCHITECT AND OWNER.
6. LABEL ALL RECEPTACLE DEVICES AS TO WHICH PANEL AND OVERCURRENT DEVICE FEEDS THE DEVICE WITH AN INDELIBLE MARKER ON THE BACK SIDE OF THE COVER PLATE.
7. SMALLEST CONDUIT SIZE ALLOWABLE IS 3/4", AND SMALLEST WIRE SIZE ALLOWABLE IS #12 AWG COPPER UNLESS SPECIFICALLY NOTED OTHERWISE. GROUND ALL CONVENIENCE OUTLETS WITH GREEN GROUND WIRE.
8. MOUNTING HEIGHTS OF DEVICES SHALL FOLLOW THE LISTING BELOW UNLESS SPECIFICALLY NOTED OTHERWISE ON THE DRAWINGS. ALL HEIGHTS ARE TO CENTERLINE OF THE DEVICE.

CONVENIENCE OUTLET	+18" AFF
TELEPHONE OUTLET	+18" AFF
TELEPHONE WALL OUTLET	+60" AFF
DATA OUTLET	+18" AFF
LIGHT SWITCH OR DIMMER	+48" AFF
DEVICES ABOVE COUNTERTOP	+44" AFF
EXIT LIGHT	+96" AFF
THERMOSTAT OR TEMPERATURE/HUMIDITY SENSOR	+48" AFF
FIRE ALARM PULL STATION	+48" AFF
FIRE ALARM HORN	+96" AFF
FIRE ALARM STROBE	+80" AFF
FIRE ALARM COMBINATION HORN/STROBE	+80" AFF
FIRE ALARM REMOTE ALARM LAMP	+96" AFF

9. CLEAN ALL EQUIPMENT TO PRESENT A "LIKE NEW" CONDITION AT PROJECT COMPLETION. VACUUM CLEAN INTERNAL AREAS OF EQUIPMENT AND PANELS.
10. CLEAN ALL MECHANICAL AND ELECTRICAL AREAS AND ROOMS OF DEBRIS AND UNUSED MATERIALS. VACUUM FLOORS.
11. THE MOUNTING POSITION FOR ALL STRAIGHT BLADE, VERTICALLY ORIENTED, NEMA 5, 6, 7, 14 AND 15 RECEPTACLES SHALL BE SUCH THAT THE GROUND PIN IS UP (ABOVE PHASE AND NEUTRAL BLADES). THE MOUNTING POSITION FOR ALL STRAIGHT BLADE, HORIZONTALLY ORIENTED, NEMA 5 AND 7 RECEPTACLES SHALL BE SUCH THAT THE NEUTRAL BLADE IS UP (ABOVE THE PHASE BLADE).

FINK ROBERTS & PETRIE, INC.
Consulting Engineers
4040 Vincennes Circle, Suite 300
Indianapolis, Indiana 46268

Eddy Street Commons
Phase II
Parking Garage
Project Number 108-004

Owner
City of South Bend, Indiana

Construction Manager
Kite Realty Group
30 South Meridian Street, Suite 1100
Indianapolis, Indiana 46204
317-577-5600

Structural Engineer
Fink, Roberts & Petrie, Inc.
4040 Vincennes Circle, Suite 300
Indianapolis, Indiana 46268
317-872-8400

Architect
Looney Ricks Kiss
175 Toyota Plaza, Suite 600
Memphis, Tennessee 38103
901-521-1440

Mechanical, Electrical & Plumbing Engineer
Circle Design Group
5510 South East Street, Suite F
Indianapolis, Indiana 46227
317-781-0200

Parking Consultant
Walker Parking Consultants
6602 East 75th Street, Suite 210
Indianapolis, Indiana 46250
317-842-6890

Civil Engineer/Landscape Architect
The Troyer Group
550 Union Street
Mishawaka, Indiana 46554
574-259-9976

100% Construction Documents
January 23, 2008

REVISION DATE	REVISION DESCRIPTION

CERTIFIED BY

DESIGNED BY	DRAWN BY	CHECKED BY
SDC	ADC	AJW

SHEET TITLE
SYMBOLS, ABBREVIATIONS AND GENERAL NOTES - ELECTRICAL

SHEET NO.
E001

G:\Revit\108004_Phased By: Thru of Plot:1/23/08-8:30am Last Edited: 1/23/08-10:27am

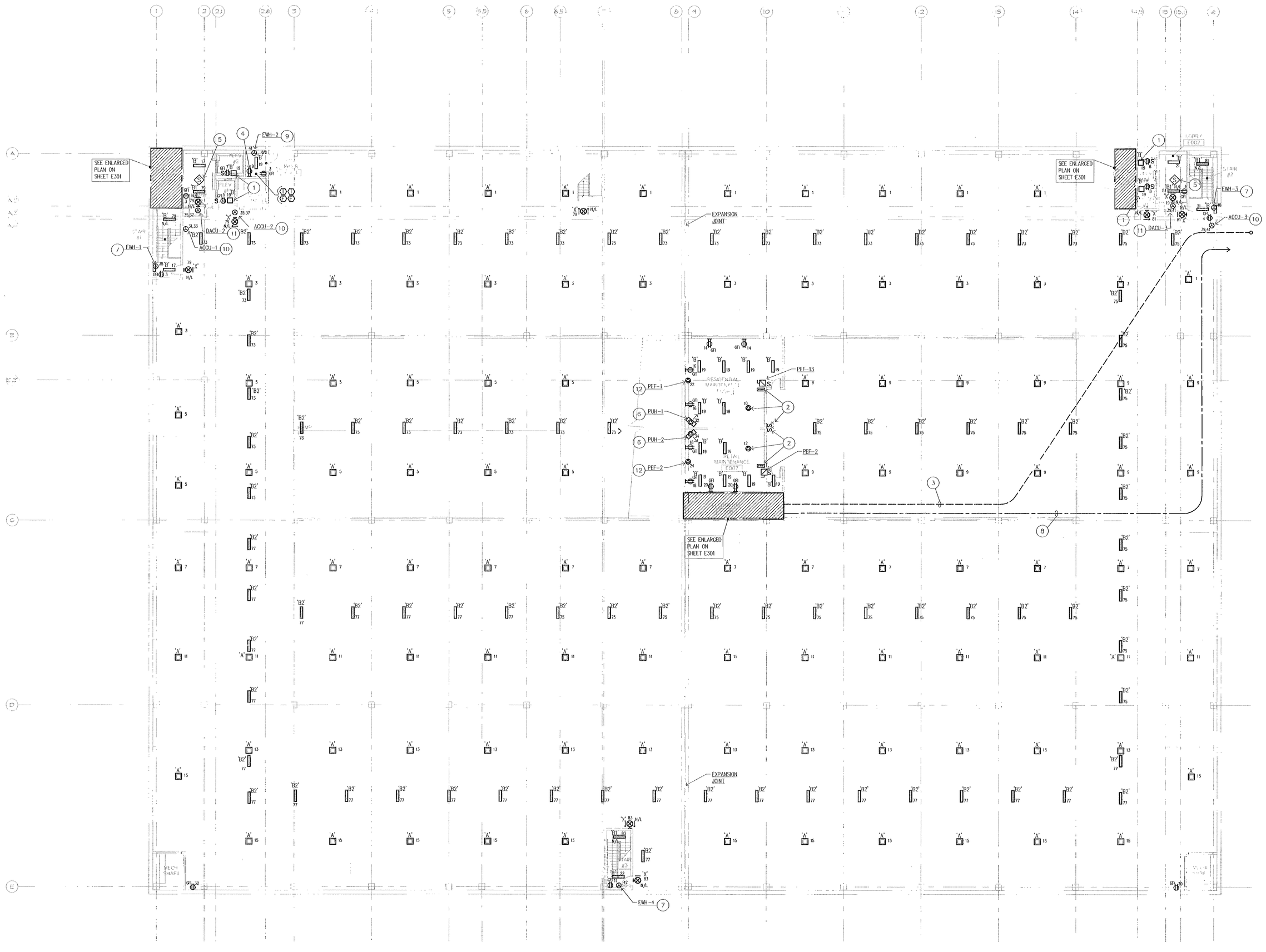

FLOOR PLAN - BASEMENT LEVEL - ELECTRICAL

SCALE: 1/16" = 1'-0"

GENERAL NOTES:

1. MOUNT BOTTOM OF ALL TYPE 'A' LIGHT FIXTURES EVEN WITH BOTTOM OF STRUCTURAL BEAMS.
2. ALL WEATHERPROOF GFI RECEPTACLES TO HAVE LOCABLE INUSE COVERS.
3. ROUTE ALL EXPOSED CONDUITS THROUGH OPENINGS PROVIDED IN STRUCTURE. DO NOT ROUTE ANYTHING BELOW STRUCTURAL BEAMS.
4. ALL LIGHTING FED FROM PANEL "GH1" VIA INTERIOR LIGHTING CONTACTOR "ILC01" UNLESS NOTED OTHERWISE.
5. ALL RECEPTACLES AND MOTORIZED DOORS FED FROM PANEL "GL1".
6. ALL NIGHT LIGHTS AND EXITS FED FROM PANEL "GH1" UNLESS NOTED OTHERWISE.

PLAN NOTES:

1. MOUNT LIGHT FIXTURE VERTICALLY, LIGHT SWITCH AND RECEPTACLE IN ELEVATOR PIT. FEED LIGHTING FROM PANEL "GH1" AND RECEPTACLES FROM PANEL "GL1". COORDINATE LOCATIONS WITH ELEVATOR CONTRACTOR.
2. CONNECT MOTORIZED OVERHEAD DOOR AND INSTALL FURNISHED CONTROL SWITCH(S).
3. PROPOSED UNDERGROUND SECONDARY ELECTRICAL SERVICE FEEDER LOCATION.
4. RECEPTACLE FOR DRYPIPE AIR COMPRESSORS.
5. FIRE ALARM DEVICE/CONNECTION FOR ELEVATOR RECALL.
6. (5KW-277V-1Ø) WALL MOUNTED ELECTRIC PROPELLER UNIT HEATER WITH INTEGRAL THERMOSTAT, DISCONNECT SWITCH, AND UNIVERSAL MOUNTING BRACKET. SIMILAR TO Q-MARK JMUH05-71/MT-1 /MPDS-25/MMB-10. FEED FROM PANEL "GH1" WITH #10 WIRE.
7. (5KW-277V-1Ø) SURFACE MOUNTED ARCHITECTURAL HEAVY-DUTY WALL HEATER WITH CONCEALED INTEGRAL THERMOSTAT AND DISCONNECT SWITCH. SIMILAR TO Q-MARK JAWH-4507/AWH-5M. FEED FROM PANEL "GH1" WITH #10 WIRE.
8. PROPOSED 4" COMMUNICATION SERVICE CONDUIT ROUTE. COORDINATE COMMUNICATION SERVICE LOCATION WITH LOCAL UTILITY.
9. (3KW-277V-1Ø) SURFACE MOUNTED ARCHITECTURAL HEAVY-DUTY WALL HEATER WITH CONCEALED INTEGRAL THERMOSTAT AND DISCONNECT SWITCH. SIMILAR TO Q-MARK JAWH-4407/AWH-5M. FEED FROM PANEL "GH1".
10. CONNECT UNIT AND FEED FROM PANEL "GL1" VIA DISCONNECT SWITCH. UNIT ALSO FEEDS INDOOR UNIT.
11. UNIT FED FROM OUTDOOR UNIT VIA DISCONNECT SWITCH.
12. FEED FROM PANEL "GL1" VIA STARTER.

FINK ROBERTS & PETRIE, INC.
Consulting Engineers
Indianapolis, Indiana 46240

Eddy Street Commons
Phase II
Parking Garage
Project Number 108-004

Owner
City of South Bend, Indiana

Construction Manager
Kite Realty Group
30 South Meridian Street, Suite 1100
Indianapolis, Indiana 46204
317-577-5600

Structural Engineer
Fink, Roberts & Petrie, Inc.
4040 Vincennes Circle, Suite 300
Indianapolis, Indiana 46268
317-872-8400

Architect
Looney Ricks Kiss
175 Toyota Plaza, Suite 600
Memphis, Tennessee 38103
901-521-1440

Mechanical, Electrical & Plumbing Engineer
Circle Design Group
5510 South East Street, Suite F
Indianapolis, Indiana 46227
317-781-6200

Parking Consultant
Walker Parking Consultants
6602 East 75th Street, Suite 210
Indianapolis, Indiana 46250
317-842-0890

Civil Engineer/Landscape Architect
The Troyer Group
550 Union Street
Mishawaka, Indiana 46554
574-259-9976

100% Construction Documents
January 23, 2008

REVISION DATE	REVISION DESCRIPTION

CERTIFIED BY
LEIGH L. WYLIE
REGISTERED
No. 870242
STATE OF INDIANA
PROFESSIONAL ENGINEER

ISSUE DATE	DESIGNED BY	DRAWN BY	CHECKED BY
01/23/08	LLW	DPC	LLW

SHEET TITLE
FLOOR PLAN - BASEMENT LEVEL - ELECTRICAL

SHEET NO.
E101

G:\jobs\07\07005_ Parker Dy Thru 4 Park\12\07-3-23\en Last Edited: 1/23/08-3:39pm

GENERAL NOTES:

1. MOUNT BOTTOM OF ALL TYPE 'A' LIGHT FIXTURES EVEN WITH BOTTOM OF STRUCTURAL BEAMS.
2. ALL WEATHERPROOF GFI RECEPTACLES TO HAVE LOCABLE INUSE COVERS.
3. ROUTE ALL EXPOSED CONDUITS THROUGH OPENINGS PROVIDED IN STRUCTURE. DO NOT ROUTE ANYTHING BELOW STRUCTURAL BEAMS.
4. ALL LIGHTING FED FROM PANEL "GHI" VIA INTERIOR LIGHTING CONTACTOR "ILCG1" UNLESS NOTED OTHERWISE. SEE SHEET E101.
5. ALL RECEPTACLES FED FROM PANEL "CL1". SEE SHEET E101.
6. ALL MONT LIGHTS AND EXITS FED FROM PANEL "GHI" UNLESS NOTED OTHERWISE. SEE SHEET E101.
7. REFER TO PARKING DRAWINGS FOR ADDITIONAL ELECTRICAL WORK REQUIRED AT AUTO GATE LOCATIONS.

PLAN NOTES:

1. LOCATE FIXTURE(S) ON DOWN RAMP TO BASEMENT LEVEL AND FEED FROM CIRCUIT IN BASEMENT.
2. RECEPTACLE FOR DRY PIPE AIR COMPRESSORS.
3. FIRE ALARM DEVICE FOR ELEVATOR RECALL.
4. (5KW-277V-1Ø) WALL MOUNTED ELECTRIC PROPELLER UNIT HEATER WITH INTEGRAL THERMOSTAT, DISCONNECT SWITCH AND UNIVERSAL MOUNTING BRACKET. SIMILAR TO Q-MARK (QMUH05-71/NT-1 /MP05-25/MMB-10 FEED FROM PANEL "GHI". SEE SHEET E101.
5. (3KW-277V-1Ø) SURFACE MOUNTED ARCHITECTURAL HEAVY-DUTY WALL HEATER WITH CONCEALED INTEGRAL THERMOSTAT AND DISCONNECT SWITCH. SIMILAR TO Q-MARK (AMH-440// AMH-SM. FEED FROM PANEL "GHI".
6. FED FROM PANEL "GHI" ON BASEMENT LEVEL. SEE SHEET E101.
7. 3/4" CONDUIT, 3 #10, 1 #10 GROUND TO PANEL "CL1" IN BASEMENT. REFER TO PARKING DRAWINGS FOR ADDITIONAL WORK. ALSO REFER TO ALTERNATE SECTION IN SPECIFICATIONS.
8. 1" CONDUIT WITH PULL WIRE TO TELEPHONE TERMINAL BOARD IN BASEMENT. REFER TO PARKING DRAWINGS FOR ADDITIONAL WORK. ALSO REFER TO ALTERNATE SECTION IN SPECIFICATIONS.
9. CONNECT AUTOMATIC PAYMENT MACHINE. CONDUIT AND WIRING TO PANEL "CL1" IN BASEMENT. REFER TO PARKING DRAWINGS FOR ADDITIONAL WORK. ALSO REFER TO ALTERNATE SECTION IN SPECIFICATIONS.
10. CONNECT UNIT AND FEED FROM PANEL "CL1" VIA DISCONNECT SWITCH. UNIT ALSO FEEDS INDOOR UNIT.
11. UNIT FED FROM OUTDOOR UNIT VIA DISCONNECT SWITCH.

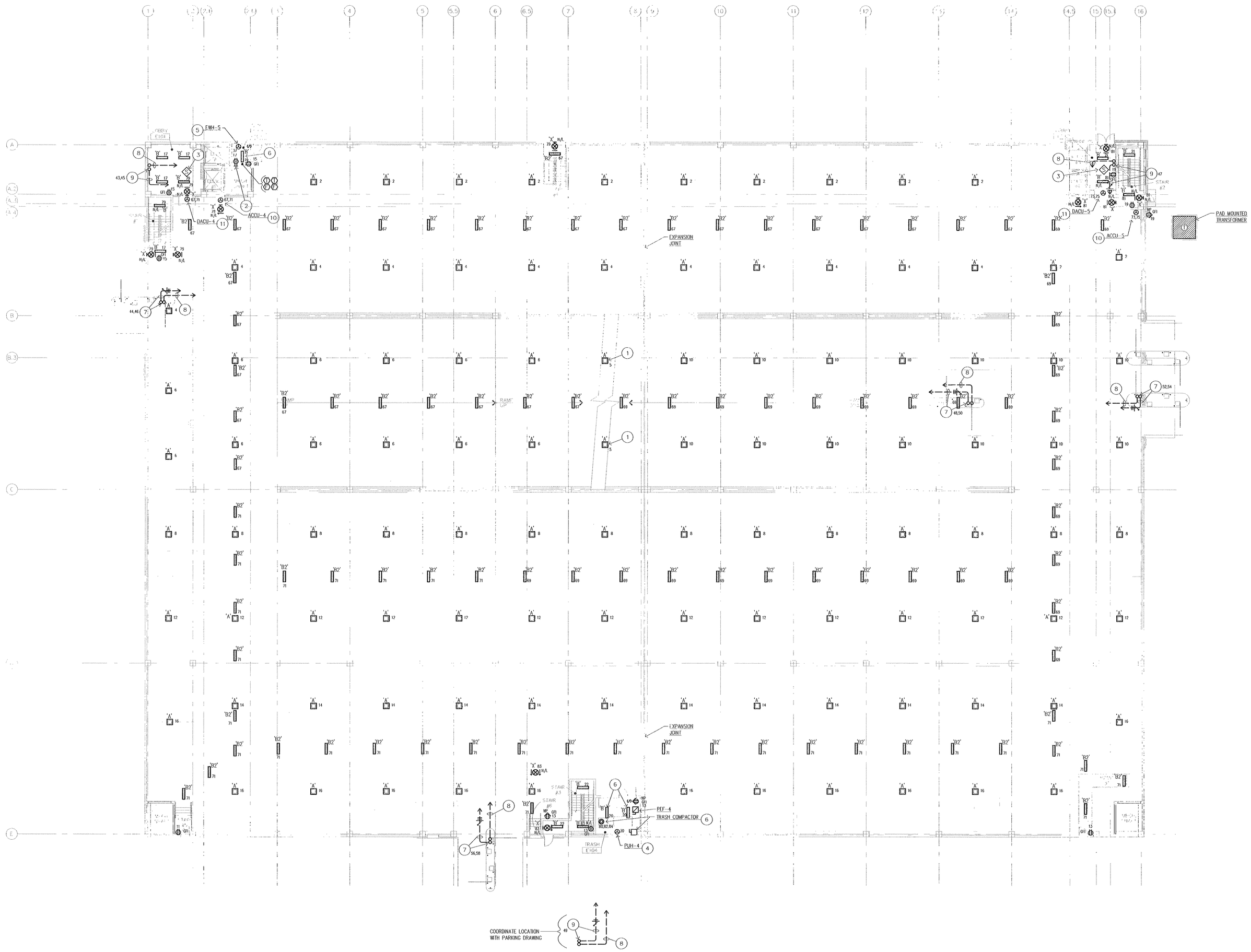

FLOOR PLAN - GROUND LEVEL - ELECTRICAL

SCALE: 1/16" = 1'-0"

FINK ROBERTS & PETRIE, INC.
Consulting Engineers
4040 Vincennes Circle Suite 300
Indianapolis, Indiana 46268

Eddy Street Commons
Phase II
Parking Garage
Project Number 108-004

Owner
City of South Bend, Indiana

Construction Manager
Kite Realty Group
30 South Meridian Street, Suite 1100
Indianapolis, Indiana 46204
317-577-5600

Structural Engineer
Fink, Roberts & Petrie, Inc.
4040 Vincennes Circle, Suite 300
Indianapolis, Indiana 46268
317-872-8400

Architect
Looney Ricks Kiss
175 Toyota Plaza, Suite 600
Memphis, Tennessee 38103
901-521-1440

Mechanical, Electrical & Plumbing Engineer
Circle Design Group
5510 South East Street, Suite F
Indianapolis, Indiana 46227
317-781-0200

Parking Consultant
Walker Parking Consultants
6602 East 75th Street, Suite 210
Indianapolis, Indiana 46250
317-842-6890

Civil Engineer/Landscape Architect
The Troyer Group
550 Union Street
Mishawaka, Indiana 46554
574-259-9976

100% Construction Documents
January 23, 2008

REVISION DATE	REVISION DESCRIPTION

CERTIFIED BY

ROBERT A. PETRIE
No. 870242
STATE OF INDIANA
REGISTERED PROFESSIONAL ENGINEER

DESIGN BY:	DRAWN BY:	CHECKED BY:
TEAM	TEAM	RAP

SHEET TITLE
FLOOR PLAN - GROUND LEVEL - ELECTRICAL

SHEET NO.
E102

© Fink/ROBER\ Plotted By: Tom at Plot1/23/08-8:42am Last Edited: 1/23/08-8:32am

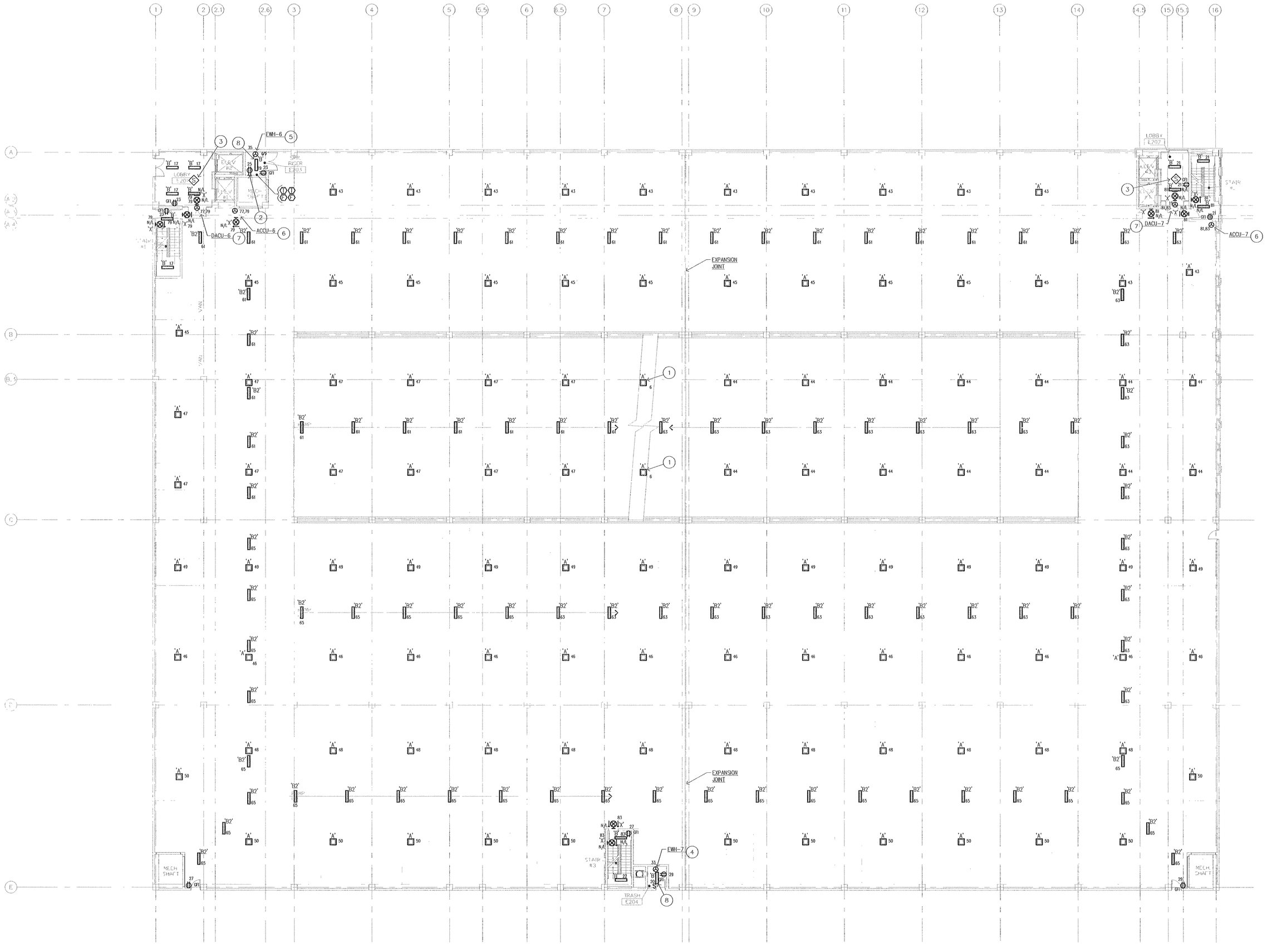

FLOOR PLAN - SECOND LEVEL - ELECTRICAL

SCALE: 1/16" = 1'-0"

GENERAL NOTES:

1. MOUNT BOTTOM OF ALL TYPE 'A' LIGHT FIXTURES EVEN WITH BOTTOM OF STRUCTURAL BEAMS.
2. ALL WEATHERPROOF GFI RECEPTACLES TO HAVE LOCABLE INUSE COVERS.
3. ROUTE ALL EXPOSED CONDUITS THROUGH OPENINGS PROVIDED IN STRUCTURE. DO NOT ROUTE ANYTHING BELOW STRUCTURAL BEAMS.
4. ALL LIGHTING FED FROM PANEL "GH1" VIA INTERIOR LIGHTING CONTACTOR "ILCG1" UNLESS NOTED OTHERWISE. SEE SHEET E101.
5. ALL RECEPTACLES FED FROM PANEL "GL1". SEE SHEET E101.
6. ALL NIGHT LIGHTS AND EXITS FED FROM PANEL "GH1" UNLESS NOTED OTHERWISE. SEE SHEET E101.

PLAN NOTES:

1. LOCATE FIXTURE(S) ON DOWN RAMP TO GROUND LEVEL AND FEED FROM CIRCUIT ON GROUND LEVEL.
2. RECEPTACLE FOR DRY PIPE AIR COMPRESSOR.
3. FIRE ALARM DEVICE FOR ELEVATOR RECALL.
4. (1.5KW-277V-1ø) SURFACE MOUNTED ARCHITECTURAL HEAVY-DUTY WALL HEATER WITH CONCEALED INTEGRAL THERMOSTAT AND DISCONNECT SWITCH. SIMILAR TO Q-MARK #AWH-4307/AWH-SM. FEED FROM PANEL "GH1". SEE SHEET E101.
5. (3KW-277V-1ø) SURFACE MOUNTED ARCHITECTURAL HEAVY-DUTY WALL HEATER WITH CONCEALED INTEGRAL THERMOSTAT AND DISCONNECT SWITCH. SIMILAR TO Q-MARK #AWH-4407/AWH-SM. FEED FROM PANEL "GH1".
6. CONNECT UNIT AND FEED FROM PANEL "GL1" VIA DISCONNECT SWITCH. UNIT ALSO FEEDS INDOOR UNIT.
7. UNIT FED FROM OUTDOOR UNIT VIA DISCONNECT SWITCH.
8. LIGHTING FED FROM PANEL "GH1" ON BASEMENT LEVEL. SEE SHEET E101.

FINK ROBERTS & PETRIE, INC.
Consulting Engineers
4040 Vincennes Circle Suite 300
Indianapolis, Indiana 46268

Eddy Street Commons
Phase II
Parking Garage
Project Number 108-004

Owner
City of South Bend, Indiana

Construction Manager
Kite Realty Group
30 South Meridian Street, Suite 1100
Indianapolis, Indiana 46204
317-577-5600

Structural Engineer
Fink, Roberts & Petrie, Inc.
4040 Vincennes Circle, Suite 300
Indianapolis, Indiana 46268
317-872-8400

Architect
Looney Ricks Kiss
175 Toyota Plaza, Suite 600
Memphis, Tennessee 38103
901-521-1440

Mechanical, Electrical & Plumbing Engineer
Circle Design Group
5510 South East Street, Suite F
Indianapolis, Indiana 46227
317-781-6200

Parking Consultant
Walker Parking Consultants
6602 East 75th Street, Suite 210
Indianapolis, Indiana 46250
317-842-6890

Civil Engineer/Landscape Architect
The Troyer Group
550 Union Street
Mishawaka, Indiana 46554
574-259-9976

100% Construction Documents
January 23, 2008

REVISION	REVISION DATE	REVISION DESCRIPTION

CERTIFIED BY

JEFFERY L. PETRIE REGISTERED No. 870242 STATE OF INDIANA PROFESSIONAL ENGINEER

ISSUANCE	ISSUANCE DATE	ISSUANCE DESCRIPTION

SHEET TITLE
FLOOR PLAN - SECOND LEVEL - ELECTRICAL

SHEET NO.
E103

G:\eet\E103E1_Rvtd By: Tue, 01 Rvt\E103e1-e12cn Last Edited: 1/23/08 8:32cm

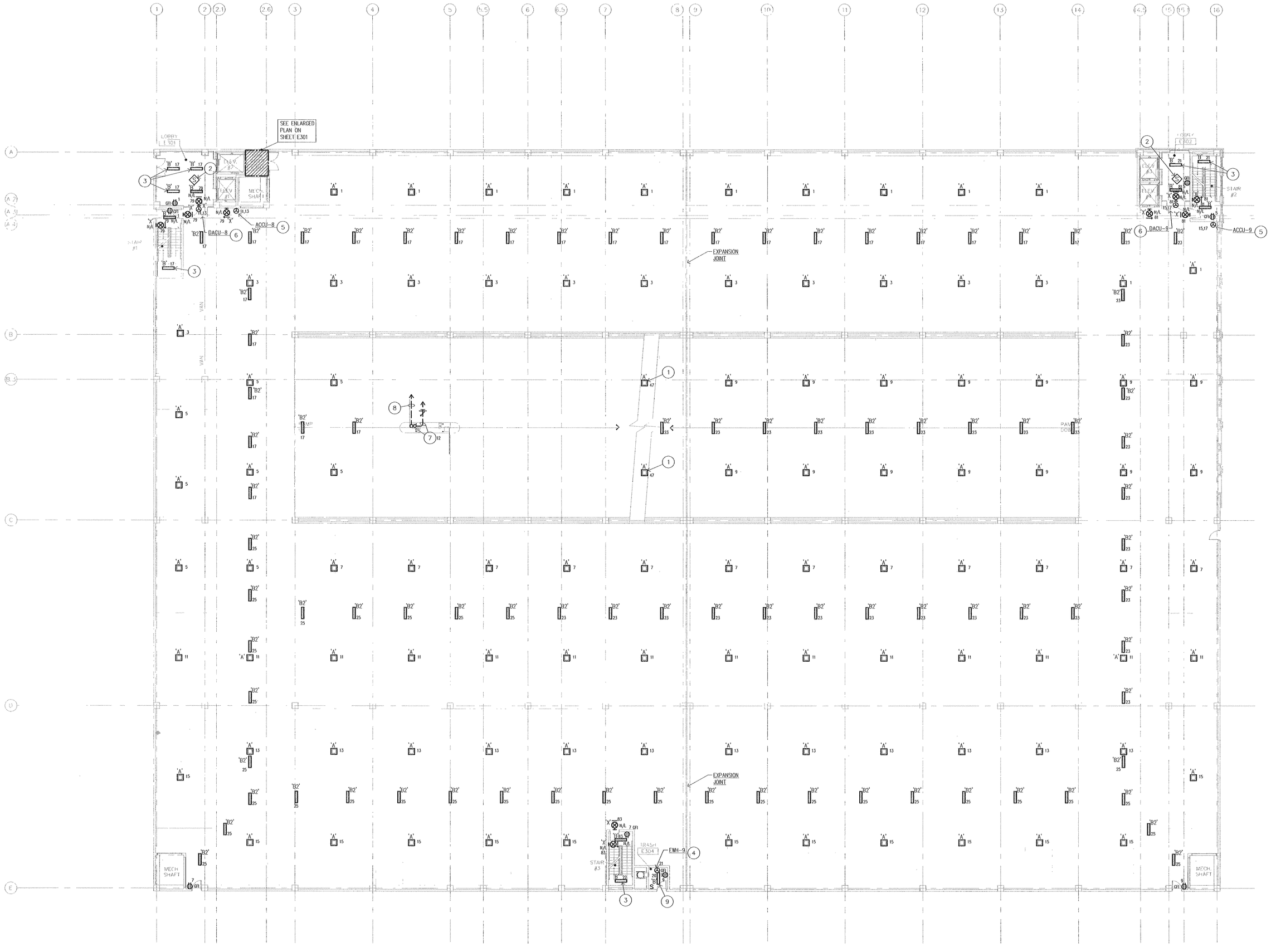

FLOOR PLAN - THIRD LEVEL - ELECTRICAL

SCALE: 1/16" = 1'-0"

GENERAL NOTES:

1. MOUNT BOTTOM OF ALL TYPE "A" LIGHT FIXTURES EVEN WITH BOTTOM OF STRUCTURAL BEAMS.
2. ALL WEATHERPROOF GFI RECEPTACLES TO HAVE LOCABLE INUSE COVERS.
3. ROUTE ALL EXPOSED CONDUITS THROUGH OPENINGS PROVIDED IN STRUCTURE. DO NOT ROUTE ANYTHING BELOW STRUCTURAL BEAMS.
4. ALL LIGHTING FED FROM PANEL "GH2" VIA INTERIOR LIGHTING CONTACTOR "ILCG2" UNLESS NOTED OTHERWISE.
5. ALL RECEPTACLES FED FROM PANEL "GL2".
6. ALL NIGHT LIGHTS AND EXITS FED FROM PANEL "GH2" UNLESS NOTED OTHERWISE.

PLAN NOTES:

1. LOCATE FIXTURES ON DOWN RAMP TO SECOND LEVEL.
2. FIRE ALARM DEVICE FOR ELEVATOR RECALL.
3. LIGHTING FED FROM PANEL "GH1" VIA INTERIOR LIGHTING CONTACTOR "ILCG1". SEE SHEET E101.
4. (1.5KW-277V-1ø) SURFACE MOUNTED ARCHITECTURAL HEAVY-DUTY WALL HEATER WITH CONCEALED INTEGRAL THERMOSTAT AND DISCONNECT SWITCH. SIMILAR TO Q-MARK #AWH-4307/AWH-SM. FEED FROM PANEL "GH2".
5. CONNECT UNIT AND FEED FROM PANEL "GL2" VIA DISCONNECT SWITCH. UNIT ALSO FEEDS INDOOR UNIT.
6. UNIT FED FROM OUTDOOR UNIT VIA DISCONNECT SWITCH.
7. CONNECT AUTO GATES. 3/4" CONDUIT, 2 #10, 1 #10 GROUND TO PANEL "GL2". REFER TO PARKING DRAWINGS FOR ADDITIONAL WORK. ALSO REFER TO ALTERNATE SECTION IN SPECIFICATIONS.
8. 1" CONDUIT WITH PULLWIRE TO TELEPHONE TERMINAL BOARD IN BASEMENT. REFER TO PARKING DRAWINGS FOR ADDITIONAL WORK. ALSO REFER TO ALTERNATE SECTION IN SPECIFICATIONS.
9. LIGHTING FED FROM PANEL "GH1" ON BASEMENT LEVEL. SEE SHEET E101.

FINK ROBERTS & PETRIE, INC.
Consulting Engineers
4040 Vincennes Circle Suite 300
Indianapolis, Indiana 46268

Eddy Street Commons
Phase II
Parking Garage
Project Number 108-004

Owner
City of South Bend, Indiana

Construction Manager
Kite Realty Group
30 South Meridian Street, Suite 1100
Indianapolis, Indiana 46204
317-577-5600

Structural Engineer
Fink, Roberts & Petrie, Inc.
4040 Vincennes Circle, Suite 300
Indianapolis, Indiana 46268
317-872-8400

Architect
Looney Ricks Kiss
175 Toyota Plaza, Suite 600
Memphis, Tennessee 38103
901-521-1440

Mechanical, Electrical & Plumbing Engineer
Circle Design Group
5510 South East Street, Suite F
Indianapolis, Indiana 46227
317-781-6200

Parking Consultant
Walker Parking Consultants
6602 East 75th Street, Suite 210
Indianapolis, Indiana 46250
317-842-6890

Civil Engineer/Landscape Architect
The Troyer Group
550 Union Street
Mishawaka, Indiana 46554
574-259-9976

100% Construction Documents
January 23, 2008

REVISION DATE | REVISION DESCRIPTION

CERTIFIED BY

REGISTERED PROFESSIONAL ENGINEER
No. 870242
STATE OF INDIANA

DESIGN DATE | DESIGN PROJECT NO. 0098 | DESIGN DRAWN BY APG | CHECKED BY

SHEET TITLE
FLOOR PLAN - THIRD LEVEL - ELECTRICAL

SHEET NO.
E104

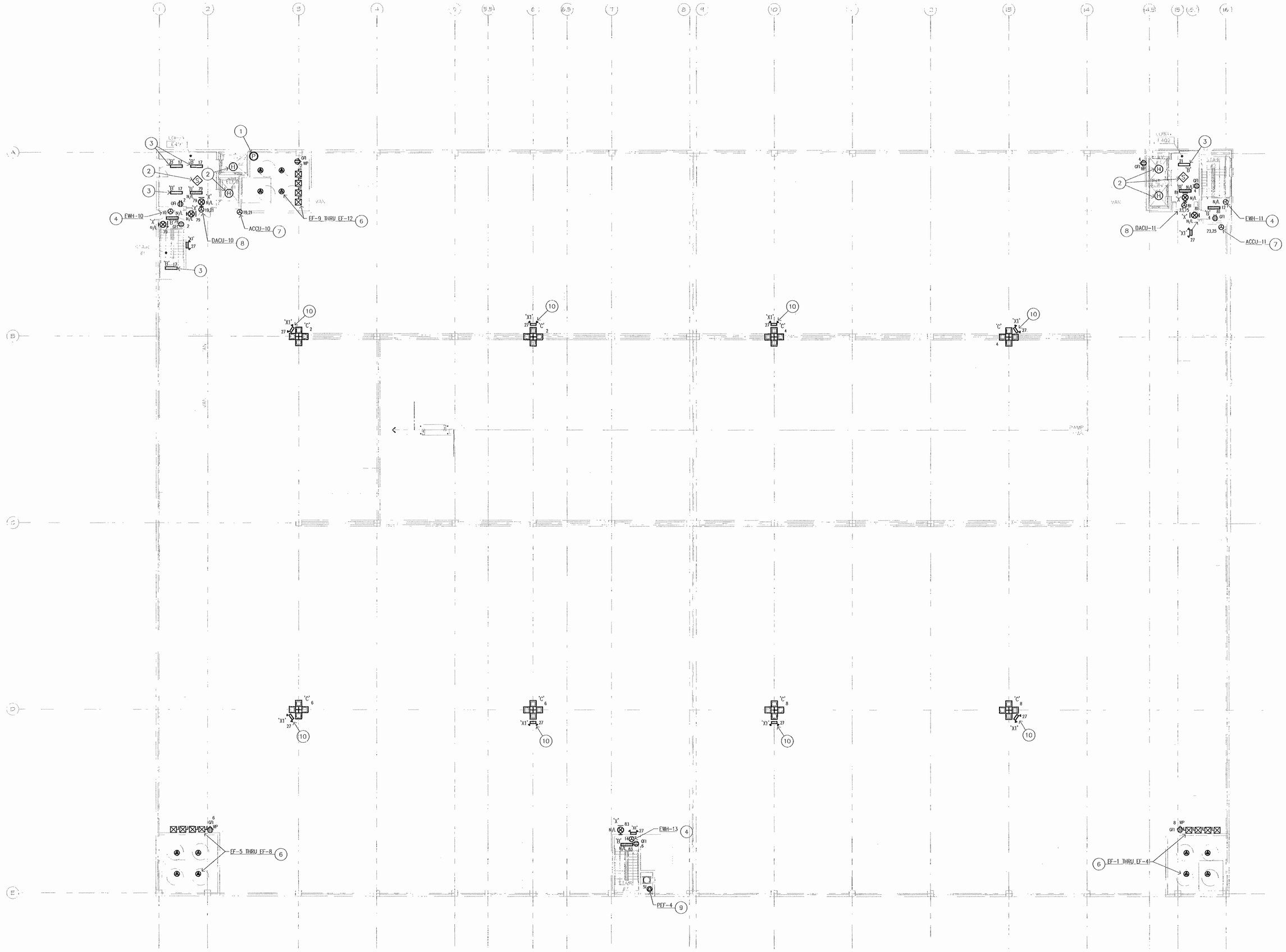

FLOOR PLAN - FOURTH LEVEL - ELECTRICAL

SCALE: 1/16" = 1'-0"

GENERAL NOTES:

1. REFER TO PARKING DRAWINGS FOR ADDITIONAL ELECTRICAL WORK REQUIRED AT AUTO GATE LOCATIONS.
2. ALL WEATHERPROOF GFI RECEPTACLES TO HAVE LOCABLE INUSE COVERS.
3. ROUTE ALL EXPOSED CONDUITS THROUGH OPENINGS PROVIDED IN STRUCTURE. DO NOT ROUTE ANYTHING BELOW STRUCTURAL BEAMS.
4. ALL LIGHTING FED FROM PANEL "CH2" VIA INTERIOR LIGHTING CONTACTOR "ILCG2" ON THIRD LEVEL UNLESS NOTED OTHERWISE. SEE SHEET E104.
5. ALL RECEPTACLES FED FROM PANEL "CL2" ON THIRD LEVEL. SEE SHEET E104.
6. ALL NIGHT LIGHTS AND EXITS FED FROM PANEL "CH2" ON THIRD LEVEL UNLESS NOTED OTHERWISE. SEE SHEET E104.
7. MOUNT ALL TYPE 'C' LIGHT FIXTURES ON COLUMNS. SEE DETAIL '5' ON DRAWING S300 UNLESS NOTED OTHERWISE.

PLAN NOTES:

1. PHOTOCELL ON ROOF. 3/4" RIGID CONDUIT AND WIRING TO EXTERIOR LIGHTING CONTACTOR "ELCG1". SEE SHEET E104. COORDINATE PENETRATION THROUGH ROOF WITH CONTRACTOR HOLDING ROOF WARRANTY.
2. FIRE ALARM DEVICES FOR ELEVATOR RECALL.
3. LIGHTING FED FROM PANEL "CH1" VIA INTERIOR LIGHTING CONTACTOR "ILCG1". SEE SHEET E101.
4. (4.8KW-277V-1Ø) SURFACE MOUNTED ARCHITECTURAL WALL HEATER WITH CONCEALED INTEGRAL THERMOSTAT AND DISCONNECT SWITCH. SIMILAR TO Q-MARK #WRH-4507/WH-SW. FEED FROM PANEL "CH2" WITH #10 WIRE. SEE SHEET E104.
5. CONNECT PTAC UNIT AT JUNCTION BOX IN SUB-BASE. COORDINATE LOCATION. FEED FROM PANEL "CH2". SEE SHEET E104.
6. CONDUIT AND WIRE FROM EACH EXHAUST FAN TO PANEL "CH1" VIA STARTER. SEE SHEET E104 AND E401.
7. CONNECT UNIT AND FEED FROM PANEL "CL2" VIA DISCONNECT SWITCH. UNIT ALSO FEEDS INDOOR UNIT.
8. UNIT FED FROM OUTDOOR UNIT VIA DISCONNECT SWITCH.
9. FED FROM PANEL "CL1" VIA STARTER IN TRASH ROOM ON GROUND LEVEL. SEE SHEET E102.
10. MOUNT FIXTURE ON POLE. COORDINATE WITH POLE MANUFACTURER.

FINK ROBERTS & PETRIE, INC.
Consulting Engineers
4040 Vincennes Circle, Suite 300
Indianapolis, Indiana 46268
317-872-8400

Eddy Street Commons Phase II Parking Garage

Project Number 108-004

Owner
City of South Bend, Indiana

Construction Manager
Kite Realty Group
30 South Meridian Street, Suite 1100
Indianapolis, Indiana 46204
317-577-9600

Structural Engineer
Fink, Roberts & Petrie, Inc.
4040 Vincennes Circle, Suite 300
Indianapolis, Indiana 46268
317-872-8400

Architect
Looney Ricks Kiss
175 Toyota Plaza, Suite 600
Memphis, Tennessee 38103
901-521-1440

Mechanical, Electrical & Plumbing Engineer
Circle Design Group
5510 South East Street, Suite F
Indianapolis, Indiana 46227
317-781-0200

Parking Consultant
Walker Parking Consultants
6602 East 75th Street, Suite 210
Indianapolis, Indiana 46250
317-842-6890

Civil Engineer/Landscape Architect
The Troyer Group
550 Union Street
Mishawaka, Indiana 46554
574-259-5976

100% Construction Documents
January 23, 2008

ISSUE DATE	REVISION DATE	REVISION DESCRIPTION

CERTIFIED BY: MITCHELL L. WHITE, REGISTERED No. 870242 STATE OF INDIANA PROFESSIONAL ENGINEER

SHEET TITLE: FLOOR PLAN - FOURTH LEVEL - ELECTRICAL

SHEET NO.: E105

G:\Revit\[108004]_Revised By: Theo at Mark\[E2]\108-4-Main Level Electrical_E2[E]for 4-Main

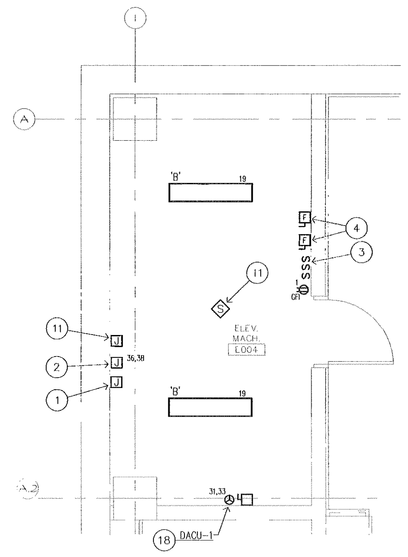

ENLARGED FLOOR PLAN - BASEMENT LEVEL - ELECTRICAL

SCALE: 1/4" = 1'-0"

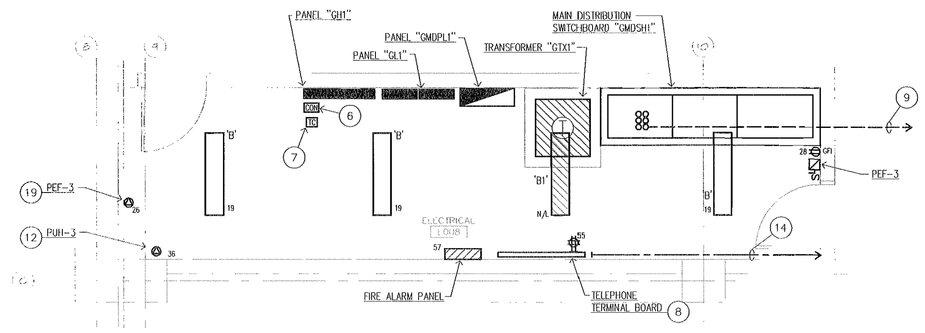

ENLARGED FLOOR PLAN - BASEMENT LEVEL - ELECTRICAL

SCALE: 1/4" = 1'-0"

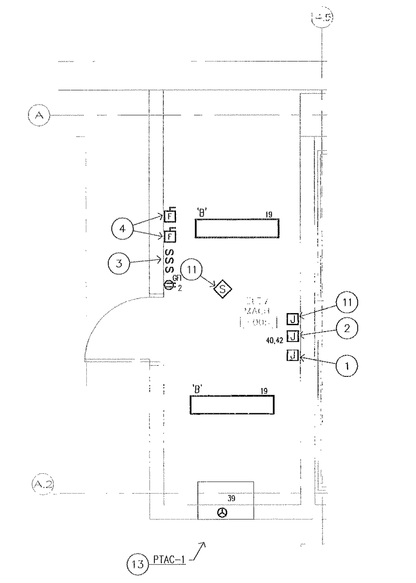

ENLARGED FLOOR PLAN - BASEMENT LEVEL - ELECTRICAL

SCALE: 1/4" = 1'-0"

ENLARGED FLOOR PLAN - THIRD LEVEL - ELECTRICAL

SCALE: 1/4" = 1'-0"

GENERAL NOTES:

1. ALL RECEPTACLES ON BASEMENT LEVEL FED FROM PANEL "GL1".
2. ALL RECEPTACLES ON THIRD LEVEL FED FROM PANEL "GL3".
3. ALL LIGHTING FED FROM PANEL "GH1" UNLESS NOTED OTHERWISE.

PLAN NOTES:

1. ROUGH-IN +7'-0" AFF FOR TELEPHONE TO ELEVATOR CABS. COORDINATE EXACT LOCATION WITH ELEVATOR CONTRACTOR.
2. ROUGH-IN FOR ELEVATOR CAB LIGHTS. COORDINATE LOCATION WITH ELEVATOR CONTRACTOR. CIRCUIT FED FROM PANEL "GL1".
3. LOCKABLE FUSED SWITCHES FOR ELEVATOR CAB LIGHTS. LABEL "ELEVATOR (#) CAB LIGHTS". SIMILAR TO SIEMENS #LF111N.
4. 100AMP-4POLE FUSED DISCONNECT SWITCH(ES) FOR 480Y/277V-3 PHASE ELEVATOR. COORDINATE FUSE SIZE AND LOCATION WITH ELEVATOR CONTRACTOR. SEE RISER DIAGRAM ON SHEET E401 FOR FEEDER SIZE.
5. (3KW-277V-1Ø) SURFACE MOUNTED ARCHITECTURAL HEAVY-DUTY WALL HEATER WITH CONCEALED INTEGRAL THERMOSTAT AND DISCONNECT SWITCH. SIMILAR TO Q-MARK #AWH-4407/AWH-SM. FEED FROM PANEL "GH2".
6. INTERIOR LIGHTING CONTACTOR "ILCG1". MOUNT ON WALL NEXT TO PANEL. SEE DIAGRAM ON SHEET E401.
7. INTERIOR LIGHTING TIMECLOCK "ILTG1". MOUNT ON WALL NEXT TO PANEL. SEE DIAGRAM ON SHEET E401.
8. 3/4" X 4' X 8' TELEPHONE TERMINAL BOARD WITH FIRE RETARDANT PAINT, +6" AFF. STUB COMMUNICATION CONDUIT OUT OVER TERMINAL BOARD AND BUSH. MOUNT QUADRAPLEX RECEPTACLE +84" AFF.
9. PROPOSED UNDERGROUND SECONDARY ELECTRICAL SERVICE FEEDER LOCATION. SEE SHEET E101 FOR CONTINUATION.
10. EXTERIOR LIGHTING CONTACTOR "ELCG1". MOUNT ON WALL NEXT TO PANEL. SEE DIAGRAM ON SHEET E401.
11. FIRE ALARM DEVICE/CONNECTION FOR ELEVATOR RECALL.
12. (5KW-277V-1Ø) WALL MOUNTED ELECTRIC PROPELLER UNIT HEATER WITH INTEGRAL THERMOSTAT, DISCONNECT SWITCH, AND UNIVERSAL MOUNTING BRACKET. SIMILAR TO Q-MARK #MUH05-71/MT-1 /MY05-25/MMB-10. FEED FROM PANEL "GH1" WITH #10 WIRE.
13. CONNECT PTAC UNIT AT JUNCTION BOX IN SUB-BASE. COORDINATE LOCATION. FEED FROM PANEL "GH1".
14. PROPOSED 4" COMMUNICATION SERVICE CONDUIT ROUTE. COORDINATE COMMUNICATION SERVICE LOCATION WITH LOCAL UTILITY. SEE SHEET E101 FOR CONTINUATION.
15. INTERIOR LIGHTING CONTACTOR "ILCG2". MOUNT ON WALL NEXT TO PANEL. SEE DIAGRAM ON SHEET E401.
16. INTERIOR LIGHTING TIME CLOCK "ILTC1". MOUNT ON WALL NEXT TO PANEL. SEE RISER DIAGRAM ON SHEET E401.
17. RECEPTACLE FOR DRY PIPE AIR COMPRESSORS. FEED FROM PANLE "GL2".
18. UNIT FED FROM ACCU-1 VIA DISCONNECT SWITCH. SEE SHEET E101.
19. FEED FROM PANEL "GL" VIA STARTER.

FINK ROBERTS & PETRIE, INC.
Consulting Engineers
Suite 300
Indianapolis, Indiana 46250

Eddy Street Commons
Phase II
Parking Garage
Project Number 108-004

Owner
City of South Bend, Indiana

Construction Manager
Kite Realty Group
30 South Meridian Street, Suite 1100
Indianapolis, Indiana 46204
317-577-5600

Structural Engineer
Fink, Roberts & Petrie, Inc.
4040 Vincennes Circle, Suite 300
Indianapolis, Indiana 46268
317-872-8400

Architect
Looney Ricks Kiss
175 Toyota Plaza, Suite 600
Memphis, Tennessee 38103
901-521-1440

Mechanical, Electrical & Plumbing Engineer
Circle Design Group
5510 South East Street, Suite F
Indianapolis, Indiana 46227
317-781-6200

Parking Consultant
Walker Parking Consultants
6602 East 75th Street, Suite 210
Indianapolis, Indiana 46250
317-842-6890

Civil Engineer/Landscape Architect
The Troyer Group
550 Union Street
Mishawaka, Indiana 46554
574-259-9976

100% Construction Documents
January 23, 2008

REVISION DATE	REVISION DESCRIPTION

CERTIFIED BY:

JEFFERY L. WHITE
REGISTERED
No. 870242
STATE OF INDIANA
PROFESSIONAL ENGINEER

DATE	07098
DRAWN BY	APO
CHECKED BY	JLW

SHEET TITLE: ENLARGED FLOOR PLANS - ELECTRICAL

SHEET NO.: E301

G:\Work\07098\ Plotted By: Time of Plot:1/23/08-8:03am Last Edited: 1/23/08-8:03am

FEEDER SCHEDULE

FEEDER	WIRE	GROUND	CONDUIT
1	24-600 KCMIL	6-350 KCMIL	(6) 4"
2	16-600KCMIL	4 #4/0	(4) 4"
3	4-500KCMIL	1 #3	3 1/2"
4	4 #4/0	1 #4	2 1/2"
5	4 #3/0	1 #6	2"
6	4 #1/0	1 #6	2"
7	4 #1	1 #8	2"
8	5 #1/0	–	2"
9	–	#3/0	–
10	4-350 KCMIL	1 #4	3"
11	3 #1/0	1 #6	2"
12	3 #2/0	1 #6	2"
13	3-250 KCMIL	1 #4	2 1/2"
14	–	–	–
15	–	–	–

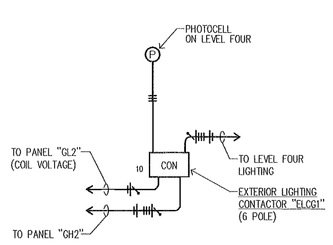

EXTERIOR LIGHTING CONTROL DIAGRAM

NO SCALE

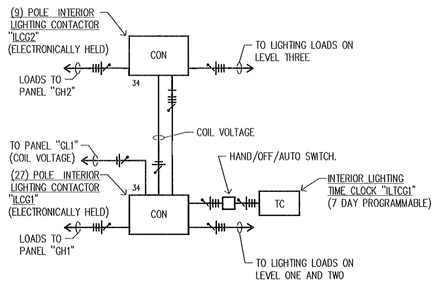

INTERIOR LIGHTING CONTROL DIAGRAM

NO SCALE

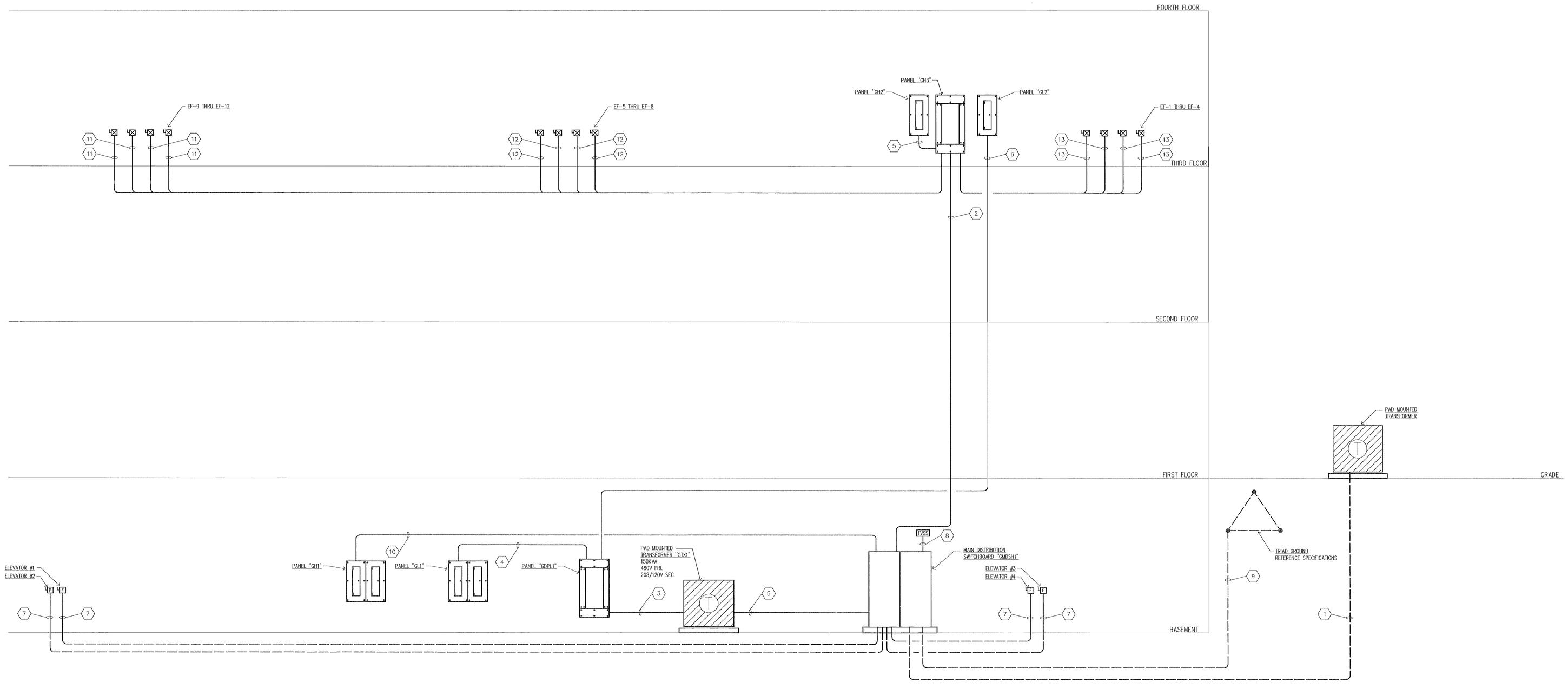

RISER DIAGRAM - ELECTRICAL

NOT TO SCALE

FINK ROBERTS & PETRIE, INC.
Consulting Engineers
4040 Vincennes Circle Suite 300
Indianapolis, Indiana 46268

Eddy Street Commons Phase II Parking Garage

Project Number 108-004

Owner
City of South Bend, Indiana

Construction Manager
Kite Realty Group
30 South Meridian Street, Suite 1100
Indianapolis, Indiana 46204
317-577-5600

Structural Engineer
Fink, Roberts & Petrie, Inc.
4040 Vincennes Circle, Suite 300
Indianapolis, Indiana 46268
317-872-8400

Architect
Looney Ricks Kiss
175 Toyota Plaza, Suite 600
Memphis, Tennessee 38103
901-521-1440

Mechanical, Electrical & Plumbing Engineer
Circle Design Group
5510 South East Street, Suite F
Indianapolis, Indiana 46227
317-781-6200

Parking Consultant
Walker Parking Consultants
6602 East 75th Street, Suite 210
Indianapolis, Indiana 46250
317-842-6890

Civil Engineer/Landscape Architect
The Troyer Group
550 Union Street
Mishawaka, Indiana 46554
574-259-9976

100% Construction Documents
January 23, 2008

REVISION DATE	REVISION DESCRIPTION

CERTIFIED BY

STEVEN L. PETRIE REGISTERED No. 870242 STATE OF INDIANA PROFESSIONAL ENGINEER

DESIGN STAGE	DRAWN BY	CHECKED BY	PROJECT NO.
CONSTRUCTION DOCUMENTS	AJPO	JVW	108-004

SHEET TITLE
RISER DIAGRAM - ELECTRICAL

SHEET NO.
E401

G:\plan\108004\ Plotted By: Steve at Work | 01/24/08 - 8:52am Last Edited: 1/21/08 - 8:52am

MAIN DISTRIBUTION SWITCHBOARD "GMDSHS": 277/480V-3Ø-4W — 2500 AMP MAIN BREAKER; SURFACE MOUNTED; BOTTOM FEED; EQUIPMENT GROUND BUS; WITH BRANCH BREAKERS AS FOLLOWS: (65,000 AMP I.C. RATING)

LOAD DESCRIPTION	TRIP FUSE SIZE	POLES	CIRC	LOAD KW HP	AMPERES A	AMPERES B	AMPERES C	LOAD KW HP	CIRC	POLES	TRIP FUSE SIZE	LOAD DESCRIPTION
			1		52				2			
ELEVATOR-1	90	3	3	40 HP	52			40 HP	4	3	90	ELEVATOR-3
			5			52			6			
			7		52				8			
ELEVATOR-2	90	3	9	40 HP	52			40 HP	10	3	90	ELEVATOR-4
			11			52			12			
			13		81				14			
TRANSFORMER-GTX1	200	3	15	–	181			–	16	3	300	PANEL 'GH1'
			17			86			18			
			19		–				20			
TVSS	150	3	21	–	62			–	22	3	200	PANEL 'GH2'
			23			53			24			
			25		–				26			
PROVISION	225	3	27	–	1218			–	28	3	1600	PANEL 'GH3'
			29			1224			30			
			31		–				32			
PROVISION	100	3	33	–	–			–	34	3	100	PROVISION
			35		–				36			
			37		–				38			
PROVISION	200	3	39	–	–			–	40	3	100	PROVISION
			41		–				42			
					1749	1139	1737					

PANEL "GH1": 277/480V-3Ø-4W — 300 AMP MAIN LUGS ONLY; FEED THROUGH LUGS; SURFACE MOUNTED; TOP FEED; EQUIPMENT GROUND BUS; WITH BRANCH BREAKERS AS FOLLOWS: (14,000 AMP I.C. RATING)

LOAD DESCRIPTION	TRIP FUSE SIZE	POLES	CIRC	LOAD KW HP	AMPERES A	AMPERES B	AMPERES C	LOAD KW HP	CIRC	POLES	TRIP FUSE SIZE	LOAD DESCRIPTION
LIGHTING BASEMENT LEVEL (N)	20	1	1 *	2.6	9			2.6	2 *	1	20	LIGHTING GROUND LEVEL (N)
LIGHTING BASEMENT LEVEL (N)	20	1	3 *	2.6	9			2.6	4 *	1	20	LIGHTING GROUND LEVEL (N)
LIGHTING BSMT. LEVEL UP RAMP (W)	20	1	5 *	3.0		9		3.0	6 *	1	20	LIGHTING GROUND LEVEL UP RAMP (W)
LIGHTING BASEMENT LEVEL (S)	20	1	7 *	3.0	11			3.0	8 *	1	20	LIGHTING GROUND LEVEL (S)
LIGHTING BASEMENT LEVEL (E)	20	1	9 *	2.6		9		3.0	10 *	1	20	LIGHTING GROUND LEVEL (E)
LIGHTING BASEMENT LEVEL (S)	20	1	11 *	3.0			11	3.0	12 *	1	20	LIGHTING GROUND LEVEL (S)
LIGHTING BASEMENT LEVEL (S)	20	1	13 *	2.6	9			2.6	14 *	1	20	LIGHTING GROUND LEVEL (S)
LIGHTING BASEMENT LEVEL (S)	20	1	15 *	2.8		10		2.8	16 *	1	20	LIGHTING GROUND LEVEL (S)
LIGHTING LOBBY/STAIR (NW)	20	1	17 *	1.6			6	–	18	1	20	SPARE
LIGHTING ELEV. MECH RMS MAINT. AND ELEC. RM.	20	1	19	1.7	6			.25	20	1	20	LIGHTING TRASH (S)
LIGHTING LOBBY, STAIR (NE)	20	1	21 *	.83		3		.50	22 *	1	20	LIGHTING STAIR (S)
SPARE	20	1	23	–			–	–	24	1	20	SPARE
SPARE	20	1	25	–	–			–	26	1	20	SPARE
SPARE	20	1	27	–		–		–	28	1	20	SPARE
SPARE	20	1	29	–			–	5.0	30	1	30	PUH-4 TRASH RM. GROUND LEVEL
SPARE	20	1	31	–	–			5.0	32	1	30	PUH-1 RESL. MAINT. BASEMENT LEVEL
EWH-7 TRASH SECOND LEVEL (S)	20	1	33	1.5		5		5.0	34	1	30	PUH-2 RETAIL BASEMENT LEVEL
EWH-6 SPKR RISER SECOND LEVEL (NW)	20	1	35	.3			11	3.0	36	1	20	PUH -3 ELECTRICAL RM. BASEMENT LEVEL
EWH-5 SPKR RISER SECOND LEVEL (NW)	20	1	37	.3	11			5	38	1	30	EWH-1 STAIR BASEMENT LEVEL (NW)
PTAC-1 ELEV MACH RM BASEMENT LEVEL (NE)	20	1	39	.3		11		5	40	1	30	EWH-3 STAIR BASEMENT LEVEL (NE)
EWH-2 SPKR RISER BASEMENT LEVEL (NW)	20	1	41	.3			11	5	42	1	30	EWH-4 STAIR BASEMENT LEVEL (S)
					112	116	119					

* CIRCUIT CONTROLLED VIA INTERIOR LIGHTING CONTACTOR "ILCGT".

PANEL "GH1": (SUB 2) 277/480V-3Ø-4W — 300 AMP MAIN LUGS ONLY; SURFACE MOUNTED; BOTTOM FEED; EQUIPMENT GROUND BUS; WITH BRANCH BREAKERS AS FOLLOWS: (14,000 AMP I.C. RATING)

LOAD DESCRIPTION	TRIP FUSE SIZE	POLES	CIRC	LOAD KW HP	AMPERES A	AMPERES B	AMPERES C	LOAD KW HP	CIRC	POLES	TRIP FUSE SIZE	LOAD DESCRIPTION
LIGHTING SECOND LEVEL (N)	20	1	43 *	2.6	9			3.0	44 *	1	20	LIGHTING SECOND LEVEL (E)
LIGHTING SECOND LEVEL (N)	20	1	45 *	2.6	11			3.0	46 *	1	20	LIGHTING SECOND LEVEL (S)
LIGHTING SECOND LEVEL UP RAMP (W)	20	1	47 *	3.0		11		2.6	48 *	1	20	LIGHTING SECOND LEVEL (S)
LIGHTING SECOND LEVEL (S)	20	1	49 *	3.0	11			2.6	50 *	1	20	LIGHTING SECOND LEVEL (S)
SPARE	20	1	51	–	–			–	52	1	20	SPARE
SPARE	20	1	53	–		–		–	54	1	20	SPARE
SPARE	20	1	55	–	–			–	56	1	20	SPARE
SPARE	20	1	57	–		–		–	58	1	20	SPARE
SPARE	20	1	59	–			–	–	60	1	20	SPARE
NIGHT LIGHTS SECOND LEVEL	20	1	61	1.9	7			–	62	1	20	PROVISION
NIGHT LIGHTS SECOND LEVEL	20	1	63	1.9		7		–	64	1	20	PROVISION
NIGHT LIGHTS SECOND LEVEL	20	1	65	1.9			7	–	66	1	20	PROVISION
NIGHT LIGHTS GROUND LEVEL	20	1	67	1.9	7			–	68	1	20	PROVISION
NIGHT LIGHTS GROUND LEVEL	20	1	69	1.9		7		–	70	1	20	PROVISION
NIGHT LIGHTS GROUND LEVEL	20	1	71	2.0			8	–	72	1	20	PROVISION
NIGHT LIGHTS BASEMENT LEVEL	20	1	73	1.9	7			–	74	1	20	PROVISION
NIGHT LIGHTS BASEMENT LEVEL	20	1	75	1.7		6		–	76	1	20	PROVISION
NIGHT LIGHTS BASEMENT LEVEL	20	1	77	1.9			7	–	78	1	20	PROVISION
NIGHT LIGHTS/ EXITS STAIR AND LOBBY (NW)	20	1	79	.770	3				80			
NIGHT LIGHTS/ EXITS STAIR AND LOBBY (NE)	70	1	81	.760		3		3 HP	82	3	20	TRASH COMPACTOR
NIGHT LIGHTS/ EXITS STAIR AND LOBBY (S)	20	1	83	.370			1		84			
					69	48	48					
					181	164	167					

PANEL "GH2": 277/480V-3Ø-4W — 225 AMP MAIN LUGS ONLY; SURFACE MOUNTED; BOTTOM FEED; EQUIPMENT GROUND BUS; WITH BRANCH BREAKERS AS FOLLOWS: (14,000 AMP I.C. RATING)

LOAD DESCRIPTION	TRIP FUSE SIZE	POLES	CIRC	LOAD KW HP	AMPERES A	AMPERES B	AMPERES C	LOAD KW HP	CIRC	POLES	TRIP FUSE SIZE	LOAD DESCRIPTION
LIGHTING THIRD LEVEL (N)	20	1	1 *	2.6	9			1.7	2 **	1	20	LIGHTING FOURTH LEVEL (NW)
LIGHTING THIRD LEVEL (N)	20	1	3 *	2.6		9		1.7	4 **	1	20	LIGHTING FOURTH LEVEL (NE)
LIGHTING THIRD LEVEL (W)	20	1	5 *	1.7			6	1.7	6 **	1	20	LIGHTING FOURTH LEVEL (SW)
LIGHTING THIRD LEVEL (S)	20	1	7 *	2.6	9			1.7	8 **	1	20	LIGHTING FOURTH LEVEL (SE)
LIGHTING THIRD LEVEL (E)	20	1	9 *	3.0		11		4.8	10	1	30	EWH-10 STAIR FOURTH LEVEL (NW)
LIGHTING THIRD LEVEL (S)	20	1	11 *	3.0			11	4.8	12	1	30	EWH-11 STAIR FOURTH LEVEL (NW)
LIGHTING THIRD LEVEL (S)	20	1	13 *	2.6	9			1.5	14	1	20	EWH-12 TRASH FOURTH LEVEL (NE)
LIGHTING THIRD LEVEL (S)	20	1	15 *	2.8		10		–	16	1	20	SPARE
NIGHT LIGHTS THIRD LEVEL	20	1	17	1.6			6	–	18	1	30	SPARE
EWH-8 SPKR. RISER THIRD LEVEL	20	1	19	3	11			–	20	1	20	SPARE
EWH-9 TRASH THIRD LEVEL (S)	20	1	21	1.5		5		–	22	1	20	SPARE
NIGHT LIGHTS THIRD LEVEL	20	1	23	1.9			7	–	24	1	20	SPARE
NIGHT LIGHTS THIRD LEVEL	20	1	25	1.9	7			–	26	1	20	SPARE
NIGHT LIGHTS FOURTH LEVEL	20	1	27	1.1		4		–	28	1	20	SPARE
SPARE	20	1	29	–			–	–	30	1	20	SPARE
PROVISION	20	1	31	–	–			–	32	1	20	PROVISION
PROVISION	20	1	33	–		–		–	34	1	20	PROVISION
PROVISION	20	1	35	–			–	–	36	1	20	PROVISION
PROVISION	20	1	37	–	–			–	38	1	20	PROVISION
PROVISION	20	1	39	–		–		–	40	1	20	PROVISION
PROVISION	20	1	41	–			–	–	42	1	20	PROVISION
					62	62	53					

* CIRCUIT CONTROLLED VIA INTERIOR LIGHTING CONTACTOR "ILCGT".
** CIRCUIT CONTROLLED VIA EXTERIOR LIGHTING CONTACTOR "ELCGT".

PANEL "GH3": 277/480V-3Ø-4W — 1600 AMP MAIN LUGS ONLY; SURFACE MOUNTED; BOTTOM FEED; EQUIPMENT GROUND BUS; WITH BRANCH BREAKERS AS FOLLOWS: (65,000 AMP I.C. RATING)

LOAD DESCRIPTION	TRIP FUSE SIZE	POLES	CIRC	LOAD KW HP	AMPERES A	AMPERES B	AMPERES C	LOAD KW HP	CIRC	POLES	TRIP FUSE SIZE	LOAD DESCRIPTION
			1		96				2			
EF-7	125	3	3	75 HP	96			75 HP	4	3	125	EF-1
			5			96			6			
			7		96				8			
EF-8	125	3	9	75 HP	96			75 HP	10	3	125	EF-2
			11			96			12			
			13		96				14			
EF-9	125	3	15	75 HP	96			75 HP	16	3	125	EF-3
			17			96			18			
			19		96				20			
EF-10	125	3	21	75 HP	96			75 HP	22	3	125	EF-4
			23			96			24			
			25		96				26			
EF-11	125	3	27	75 HP	96			75 HP	28	3	125	EF-5
			29			96			30			
			31		96				32			
EF-12	125	3	33	75 HP	96			75 HP	34	3	125	EF-6
			35			96			36			
–	–	–	37	–	–				38			
–	–	–	39	–	68		–		40	3	200	PANEL 'GH2'
–	–	–	41	–			77		42			
					1218	1220	1229					

MOTORIZED EQUIPMENT SCHEDULE

MARK	QUAN.	FURN. BY	MOTOR DATA HP	KW	VOLT	PH	STARTER DATA TYPE	NEMA ENCL	CONTROLS	BY	DISC. SWITCH TYPE	NEMA ENCL	BY	CONTROLS TYPE	BY	REMARKS CODE
EF-1 THRU EF-12	12	MC	75	–	480	3	CM	3R	HOA/PL/AUX	EC	–	–	–	–	–	–
PTAC-1 AND PTAC-2	2	MC	–	3	277	1	CP	–	–	MF	CORD/ PLUG	–	MF	–	–	(1)
PEF-1 THRU PEF-4	4	MC	1/4	–	120	1	MMS	1	PL/AUX	EC	–	–	MF	–	–	–
TRASH COMPACTOR	1	GC	.3	2.2	480	3	CP	–	–	MF	–	–	EC	–	–	–
DACU-1 THRU DACU-11	11	MC	–	.2	208	1	CP	–	–	MF	30A-3P NF	1	EC	–	–	(2)
ACCU-1 THRU ACCU-11	11	MC	–	1.9	208	1	CP	–	–	MF	30A-3P NF	3R	EC	–	–	–
–	–	–	–	–	–	–	–	–	–	–	–	–	–	–	–	–
–	–	–	–	–	–	–	–	–	–	–	–	–	–	–	–	–
–	–	–	–	–	–	–	–	–	–	–	–	–	–	–	–	–
–	–	–	–	–	–	–	–	–	–	–	–	–	–	–	–	–
–	–	–	–	–	–	–	–	–	–	–	–	–	–	–	–	–
–	–	–	–	–	–	–	–	–	–	–	–	–	–	–	–	–
–	–	–	–	–	–	–	–	–	–	–	–	–	–	–	–	–
–	–	–	–	–	–	–	–	–	–	–	–	–	–	–	–	–
–	–	–	–	–	–	–	–	–	–	–	–	–	–	–	–	–
–	–	–	–	–	–	–	–	–	–	–	–	–	–	–	–	–
–	–	–	–	–	–	–	–	–	–	–	–	–	–	–	–	–
–	–	–	–	–	–	–	–	–	–	–	–	–	–	–	–	–
–	–	–	–	–	–	–	–	–	–	–	–	–	–	–	–	–
–	–	–	–	–	–	–	–	–	–	–	–	–	–	–	–	–
–	–	–	–	–	–	–	–	–	–	–	–	–	–	–	–	–
–	–	–	–	–	–	–	–	–	–	–	–	–	–	–	–	–
–	–	–	–	–	–	–	–	–	–	–	–	–	–	–	–	–

AS	AQUA SWITCH	MF	MANUFACTURER
AUX	AUXILIARY CONTACTS	MMS	MANUAL MOTOR STARTER
CB	CIRCUIT BREAKER	NA	NOT APPLICABLE
CM	COMBINATION MAGNETIC	NF	NON-FUSIBLE
CP	CONTROL PACKAGE	PB	PUSH BUTTON
EP	ELECTRIC/PNEUMATIC SWITCH	PE	PNEUMATIC/ELECTRIC SWITCH
ES	END SWITCH	PL	PILOT LIGHT
F	FUSED	PS	PUMP SEQUENCER
FL	FLOW SWITCH	REV	REVERSING
FS	FREEZE STAT	SD	SMOKE DETECTOR
HD	HEAT DETECTOR	SO	SOLENOID VALVE
HOA	HAND/OFF/AUTO SWITCH	SS	STOP/START PUSH BUTTON
HS	HUMIDISTAT	T	CONTROL CIRC. TRANS (120V)
INT	INTERLOCKED TO	TC	TIME CLOCK
LL	LEAD-LAG SWITCH	TS	THERMOSTAT
MC	MECHANICAL CONTRACTOR	TS	TWO SPEED
MCC	MOTOR CONTROL CENTER	VFD	VARIABLE FREQUENCY DRIVE

NOTES:
1. CONNECT TO JUNCTION BOX IN SUB-BASE OF UNIT.
2. INDOOR UNIT FED FROM OUTDOOR UNIT.

FINK ROBERTS & PETRIE, INC. Consulting Engineers
4040 Vincennes Circle Suite 300 Indianapolis, Indiana 46268

Eddy Street Commons
Phase II
Parking Garage
Project Number 108-004

Owner
City of South Bend, Indiana

Construction Manager
Kite Realty Group
30 South Meridian Street, Suite 1100
Indianapolis, Indiana 46204
317-577-5690

Structural Engineer
Fink, Roberts & Petrie, Inc.
4040 Vincennes Circle, Suite 300
Indianapolis, Indiana 46268
317-872-8400

Architect
Looney Ricks Kiss
175 Toyota Plaza, Suite 600
Memphis, Tennessee 38103
901-521-1440

Mechanical, Electrical & Plumbing Engineer
Circle Design Group
5510 South East Street, Suite F
Indianapolis, Indiana 46227
317-781-0200

Parking Consultant
Walker Parking Consultants
6602 East 75th Street, Suite 210
Indianapolis, Indiana 46250
317-842-6890

Civil Engineer/Landscape Architect
The Troyer Group
530 Union Street
Mishawaka, Indiana 46544
574-259-9976

100% Construction Documents
January 23, 2008

NO.	DATE	REVISION DESCRIPTION

CERTIFIED BY
JEFFERY L. WHITE REGISTERED No. 870242 STATE OF INDIANA PROFESSIONAL ENGINEER

NO.	DATE	BY

SHEET TITLE
SCHEDULES - ELECTRICAL

SHEET NO.
E501

G:\Jobs\07\07001\ Plotted By: Tom at Plot1/22/08-8:54am Last Edited: 1/22/08-8:52pm

PANEL "GSPLY":
120/208V-3ø-4W

400 AMP MAIN BREAKER; SURFACE MOUNTED; BOTTOM FEED; EQUIPMENT GROUND BUS; WITH BRANCH BREAKERS AS FOLLOWS:
(65,000 AMP I.C. RATING)

LOAD DESCRIPTION	TRIP FUSE SIZE	POLES	CIRC	LOAD KW HP	AMPERES A	AMPERES B	AMPERES C	LOAD KW HP	CIRC	POLES	TRIP FUSE SIZE	LOAD DESCRIPTION
			1		146 41				2			
PANEL "GLS"	225	3	3	--		163 33		--	4	3	150	PANEL "GL2"
			5				145 55		6			
			7		87 --				8			
PROVISION	225	3	9	--		87 --		--	10	3	100	PROVISION
			11				53 --		12			
			13		-- --				14			
PROVISION	--	3	15	--	-- --			--	16	3	--	PROVISION
			17			-- --			18			
--	--	--	19	--	-- --			--	20	--	--	--
--	--	--	21	--		-- --		--	22	--	--	--
--	--	--	23	--			-- --	--	24	--	--	--
--	--	--	25	--	-- --			--	26	--	--	--
--	--	--	27	--		-- --		--	28	--	--	--
--	--	--	29	--			-- --	--	30	--	--	--
--	--	--	31	--	-- --			--	32	--	--	--
--	--	--	33	--		-- --		--	34	--	--	--
--	--	--	35	--			-- --	--	36	--	--	--
--	--	--	37	--	-- --			--	38	--	--	--
--	--	--	39	--		-- --		--	40	--	--	--
--	--	--	41	--			-- --	--	42	--	--	--
					187	196	198					

PANEL "GL1":
120/208V-3ø-4W

225 AMP MAIN LUGS ONLY; FEED THROUGH LUGS; SURFACE MOUNTED; TOP FEED; EQUIPMENT GROUND BUS; WITH BRANCH BREAKERS AS FOLLOWS: (10,000 AMP I.C. RATING)

LOAD DESCRIPTION	TRIP FUSE SIZE	POLES	CIRC	LOAD KW HP	AMPERES A	AMPERES B	AMPERES C	LOAD KW HP	CIRC	POLES	TRIP FUSE SIZE	LOAD DESCRIPTION
RECEPTACLES ELEV. EQ. RM. BASEMENT (NW)	20	1	1	.180	1.5 1.5			.180	2	1	20	RECEPTACLES ELEV. EQ. RM. BASEMENT (NE)
RECEPTACLES LOBBY, STAIR, BASEMENT (NW)	20	1	3	.540		4.5 3		.360	4	1	20	RECEPTACLES LOBBY STAIRS (NE)
RECEPTACLE ELEV. #1 PIT BASEMENT (NW)	20	1	5	.180			1.5 1.5	.180	6	1	20	RECEPTACLE ELEV. #3 PIT BASEMENT (NE)
RECEPTACLE ELEV. #2 PIT BASEMENT (NW)	20	1	7	.180	1.5 1.5			.180	8	1	20	RECEPTACLE ELEV. #4 PIT BASEMENT (NE)
RECEPTACLE SPKR. RM, AIR COMP. (NW)	20	1	9	--		6 9.8		1/2 HP	10	1	20	MOTOR DOOR RESI. MAINT. BASEMENT
RECEPTACLE STAIR (S) BASEMENT/GROUND LEVELS	20	1	11	.540			4.5 9.8	1/2 HP	12	1	20	MOTOR DOOR RETAIL MAINT. BASEMENT
RECEPTACLE TRASH (SE) GROUND LEVEL	20	1	13	.540	4.5 3			.360	14	1	20	RECEPTACLES, RESI. MAINT. BASEMENT (N)
RECEPTACLE STAIR, LOBBY GROUND LEVEL (NW)	20	1	15	.360		3 3		.360	16	1	20	RECEPTACLES, RESI MAINT. BASEMENT (W)
RECEPTACLE SPKR. RM. AIR COMP. (NW)	20	1	17	--			6 3	.360	18	1	20	RECEPTACLES, RETAIL MAINT. BASEMENT (W)
RECEPTACLES STAIR LOBBY GROUND LEVEL (NE)	20	1	19	.360	3 3			.360	20	1	20	RECEPTACLES, RETAIL MAINT. BASEMENT (S)
RECEPTACLES STAIR LOBBY SECOND LEVEL (NE)	20	1	21	.360		3 5.8		1/4 HP	22	1	20	PEF-1 RESI. MAINT. BASEMENT LEVEL
RECEPTACLES STAIR LOBBY SECOND LEVEL (NW)	20	1	23	.540			4.5 5.8	1/4 HP	24	1	20	PEF-2 RETAIL MAINT. BASEMENT LEVEL
RECEPTACLE SPKR RM AIR COMP. (NW)	20	1	25	--	6 5.8			1/4 HP	26	1	20	PEF-3 ELEC. ROOM BASEMENT LEVEL
RECEPTACLE STAIR SECOND LEVEL (SW)	20	1	27	.360		3 1.5		.180	28	1	20	RECEPT. ELEC. RM. BASEMENT LEVEL
RECEPTACLE TRASH SECOND LEVEL (SE)	20	1	29	.360			3 1.5	.180	30	1	20	RECEPTACLE (SE) BASEMENT LEVEL
ACCU-1/DACU-1 BSMT. ELEV. MACH. RM (NW)	20	2	31	1.9	9 1.5			.180	32	1	20	RECEPTACLE (SW) BASEMENT LEVEL
			33			9 2		--	34	1	20	INT. LTG. CONT. COIL VOLTAGE
ACCU-2/DACU-2 BASEMENT LOBBY (NW)	20	2	35	1.9			3 4	.50	36	1	20	ELEVATOR #1 CAB LIGHTS
			37		9 4			.50	38	1	20	ELEVATOR #2 CAB LIGHTS
ACCU-3/DACU-3 BASEMENT LOBBY (NE)	20	2	39	1.9		9 4		.50	40	1	20	ELEVATOR #3 CAB LIGHTS
			41				9 4	.50	42	1	20	ELEVATOR #4 CAB LIGHTS
					55	67	67					

PANEL "GL1": (SUB 2)
120/208V-3ø-4W

225 AMP MAIN LUGS ONLY; SURFACE MOUNTED; BOTTOM FEED; EQUIPMENT GROUND BUS; WITH BRANCH BREAKERS AS FOLLOWS:
(10,000 AMP I.C. RATING)

LOAD DESCRIPTION	TRIP FUSE SIZE	POLES	CIRC	LOAD KW HP	AMPERES A	AMPERES B	AMPERES C	LOAD KW HP	CIRC	POLES	TRIP FUSE SIZE	LOAD DESCRIPTION
AUTOMATIC PAY MACH. GRD. LEV. LOBBY (NW)	20	1	43	--	5 20			2.4	44	1	30	AUTO GATES GROUND LEVEL (NW)
AUTOMATIC PAY MACH. GRD. LEV. LOBBY (NW)	20	1	45	--		5 20		2.4	46	1	30	AUTO GATES GROUND LEVEL (NW)
AUTOMATIC PAY MACH. GRD. LEV. LOBBY (NE)	20	1	47	--			5 20	2.4	48	1	30	AUTO GATES GROUND LEVEL (E)
AUTOMATIC PAY MACH. GRD. LEV. LOBBY (S)	20	1	49	--	5 20			2.4	50	1	30	AUTO GATES GROUND LEVEL (E)
SPARE	20	1	51	--		-- 20		2.4	52	1	30	AUTO GATES GROUND LEVEL (E)
SPARE	20	1	53	--			-- 20	2.4	54	1	30	AUTO GATES GROUND LEVEL (E)
RECEPTACLE TELE. TREM. ED. ELEC. RM	20	1	55	.36	3 20			2.4	56	1	30	AUTO GATES GROUND LEVEL (S)
FIRE ALARM PANEL	20	1	57	.50		4 20		2.4	58	1	30	AUTO GATES GROUND LEVEL (S)
SPARE	20	1	59	--			-- --	--	60	1	20	SPARE
SPARE	20	1	61	--	-- --			--	62	1	20	SPARE
SPARE	20	1	63	--		-- --		--	64	1	20	SPARE
SPARE	20	1	65	--			-- --	--	66	1	20	SPARE
SPARE	20	1	67	--	-- --			--	68	1	20	SPARE
ACCU-4/DACU-4 GROUND LEVEL (NW)	20	2	69	1.9		9 --		--	70	1	20	SPARE
			71				9 --	--	72	1	20	SPARE
ACCU-5/DACU-5 GROUND LEVEL (NE)	20	2	73	1.9	9 --			--	74	1	20	PROVISION
			75			9 --		--	76	1	20	PROVISION
ACCU-6/DACU-6 SECOND LEVEL LOBBY (NW)	20	2	77	1.9			9 --	--	78	1	20	PROVISION
			79		9 --			--	80	1	20	PROVISION
ACCU-7/DACU-7 SECOND LEVEL LOBBY (NE)	20	2	81	1.5		9 --		--	82	1	20	PROVISION
			83				9 --	--	84	1	20	PROVISION
					91	96	78					
					146	163	145					

PANEL "GL2":
120/208V-3ø-4W

150 AMP MAIN LUGS ONLY; SURFACE MOUNTED; BOTTOM FEED; EQUIPMENT GROUND BUS; WITH BRANCH BREAKERS AS FOLLOWS:
(10,000 AMP I.C. RATING)

LOAD DESCRIPTION	TRIP FUSE SIZE	POLES	CIRC	LOAD KW HP	AMPERES A	AMPERES B	AMPERES C	LOAD KW HP	CIRC	POLES	TRIP FUSE SIZE	LOAD DESCRIPTION
RECEPTACLES LOBBY STAIR THIRD LEVEL (NW)	20	1	1	.540	4.5 4.5			.540	2	1	20	RECEPTACLES LOBBY STAIR FOURTH LEVEL (NW)
RECEPTACLES SPKR. RM. AIR COMP. THIRD LEVEL (NW)	20	1	3	--		6 4.5		.540	4	1	20	RECEPTACLES LOBBY STAIR FOURTH LEVEL (NE)
RECEPTACLES STAIR LOBBY THIRD LEVEL (NE)	20	1	5	.360			3 3	.360	6	1	20	RECEPTACLES LOBBY STAIR FOURTH LEVEL (SW)
RECEPTACLES STAIR THIRD LEVEL (SW)	20	1	7	.360	3 1.5			.180	8	1	20	RECEPTACLES LOBBY STAIR FOURTH LEVEL (SE)
RECEPTACLES TRASH STAIR THIRD LEVEL (SE)	20	1	9	.360		3 1		--	10	1	20	EXIT LIGHTING CONT. COIL VOLTAGE
ACCU-8/DACU-8 THIRD LEVEL LOBBY (NW)	20	2	11	1.9			9 20	2.4	12	1	30	AUTO GATES THIRD LEVEL (NW)
			13		9 --			--	14	1	20	SPARE
ACCU-9/DACU-9 THIRD LEVEL LOBBY (NE)	20	2	15	1.9		9 --		--	16	1	20	SPARE
			17				9 --	--	18	1	20	SPARE
ACCU-10/DACU-10 FOURTH LEVEL LOBBY (NW)	20	2	19	1.9	9 --			--	20	1	20	SPARE
			21			9 --		--	22	1	20	SPARE
ACCU-11/DACU-11 FOURTH LEVEL LOBBY (NE)	20	2	23	1.9			9 --	--	24	1	20	SPARE
			25		9 --			--	26	1	20	SPARE
PROVISION	20	1	27	--	-- --			--	28	1	20	PROVISION
PROVISION	20	1	29	--		-- --		--	30	1	20	PROVISION
PROVISION	20	1	31	--	-- --			--	32	1	20	PROVISION
PROVISION	20	1	33	--		-- --		--	34	1	20	PROVISION
PROVISION	20	1	35	--			-- --	--	36	1	20	PROVISION
PROVISION	20	1	37	--	-- --			--	38	1	20	PROVISION
PROVISION	20	1	39	--		-- --		--	40	1	20	PROVISION
PROVISION	20	1	41	--			-- --	--	42	1	20	PROVISION
					41	33	53					

G:\Revit\07095_Parking Plotted By: Thom at Feb1/25/08-8:54am Last Edited: 1/25/08-10:22am

FINK ROBERTS & PETRIE, INC.
Consulting Engineers
4040 Vincennes Circle
Indianapolis, Indiana 46268

Eddy Street Commons
Phase II
Parking Garage
Project Number 108-004

Owner
City of South Bend, Indiana

Construction Manager
Kite Realty Group
30 South Meridian Street, Suite 1100
Indianapolis, Indiana 46204
317-577-5600

Structural Engineer
Fink, Roberts & Petrie, Inc.
4040 Vincennes Circle, Suite 300
Indianapolis, Indiana 46268
317-872-8400

Architect
Looney Ricks Kiss
175 Toyota Plaza, Suite 600
Memphis, Tennessee 38103
901-521-1440

Mechanical, Electrical & Plumbing Engineer
Circle Design Group
5510 South East Street, Suite F
Indianapolis, Indiana 46227
317-781-0200

Parking Consultant
Walker Parking Consultants
6602 East 75th Street, Suite 210
Indianapolis, Indiana 46250
317-842-6890

Civil Engineer/Landscape Architect
The Troyer Group
550 Union Street
Mishawaka, Indiana 46554
574-259-9976

100% Construction Documents
January 23, 2008

REVISION DATE	REVISION DESCRIPTION

CERTIFIED BY:
JEFFERY E. WILKES
REGISTERED
No. 870242
STATE OF INDIANA
PROFESSIONAL ENGINEER

DRAWN BY	CHECKED BY
07095	JEW
THOM JONES	
JEW	

SHEET TITLE
SCHEDULES - ELECTRICAL

SHEET NO.
E502

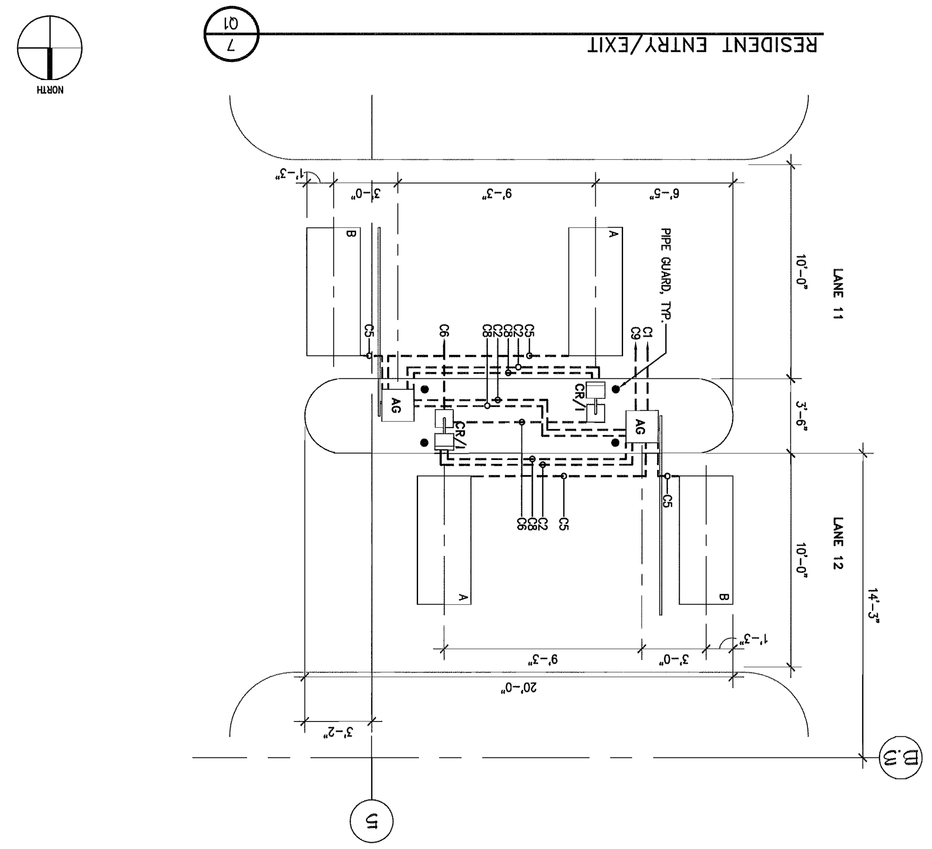

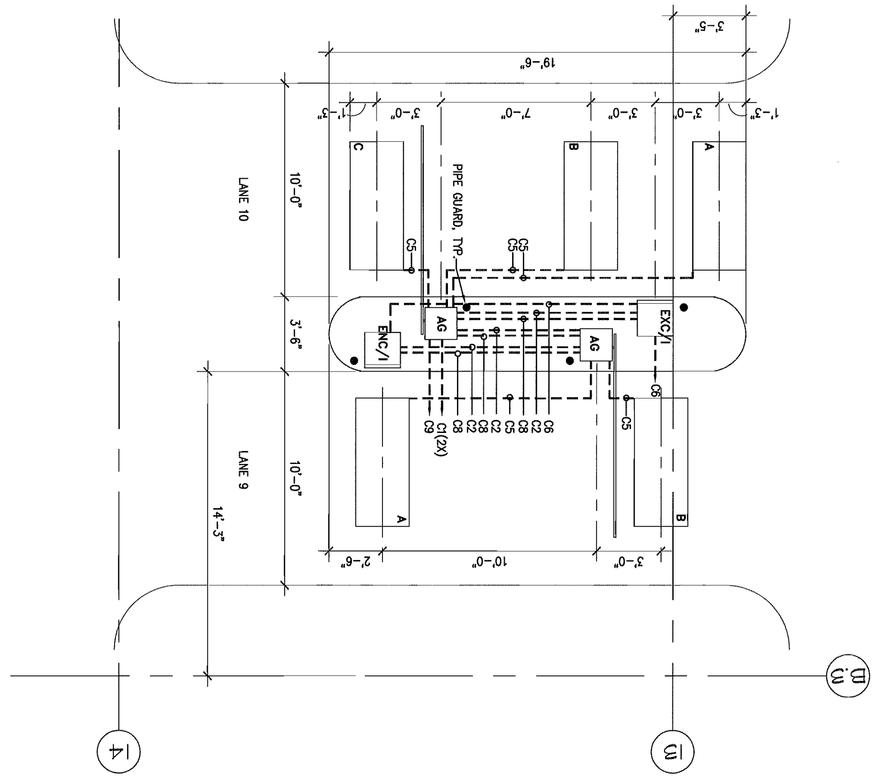

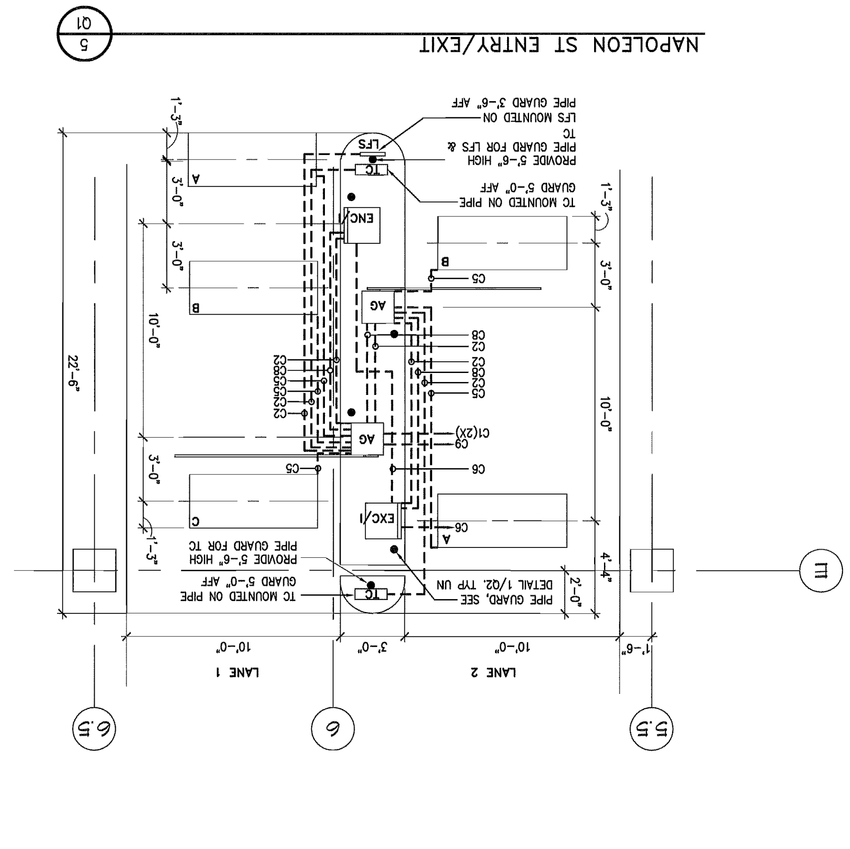

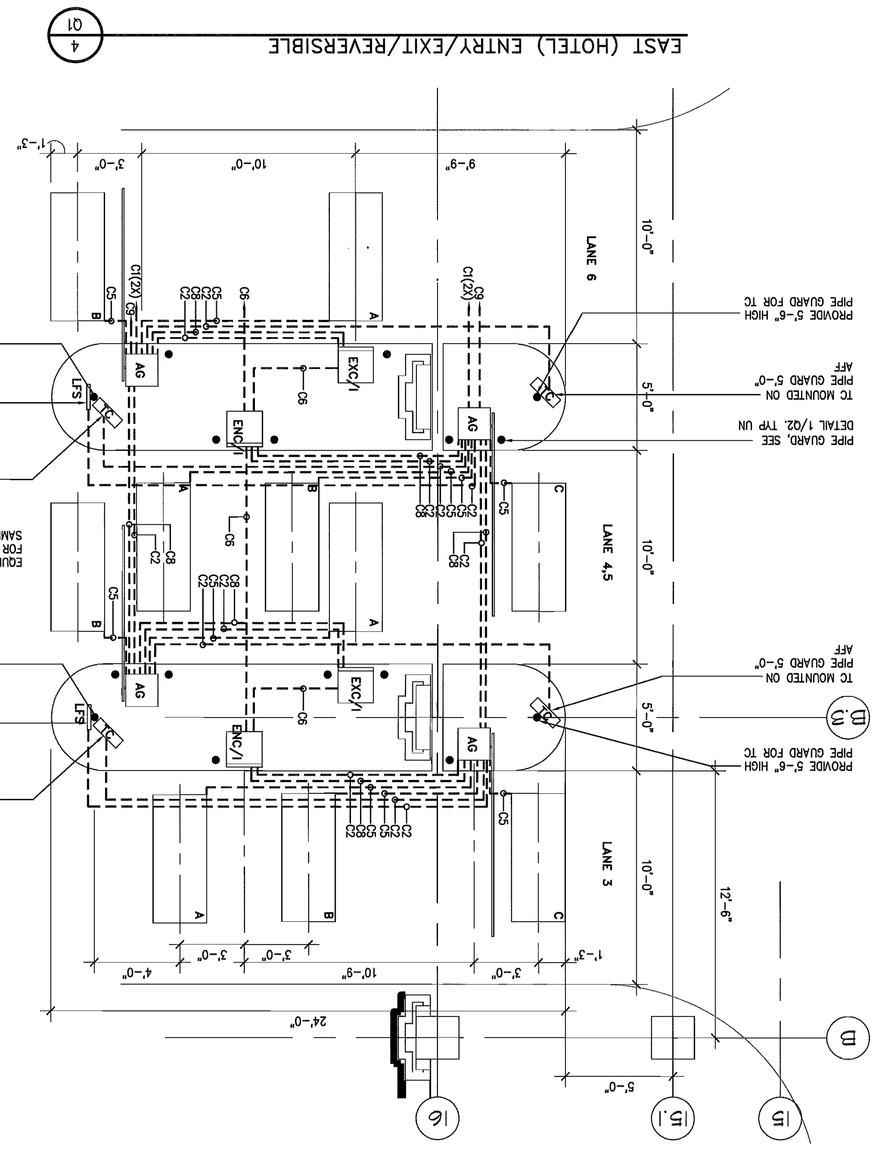

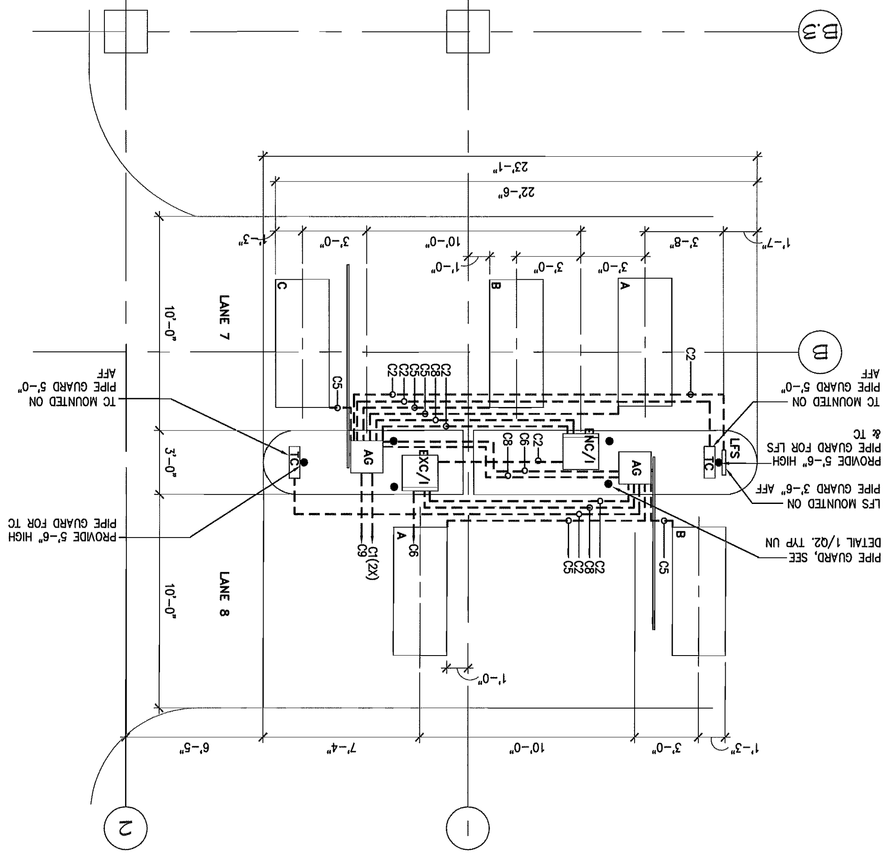

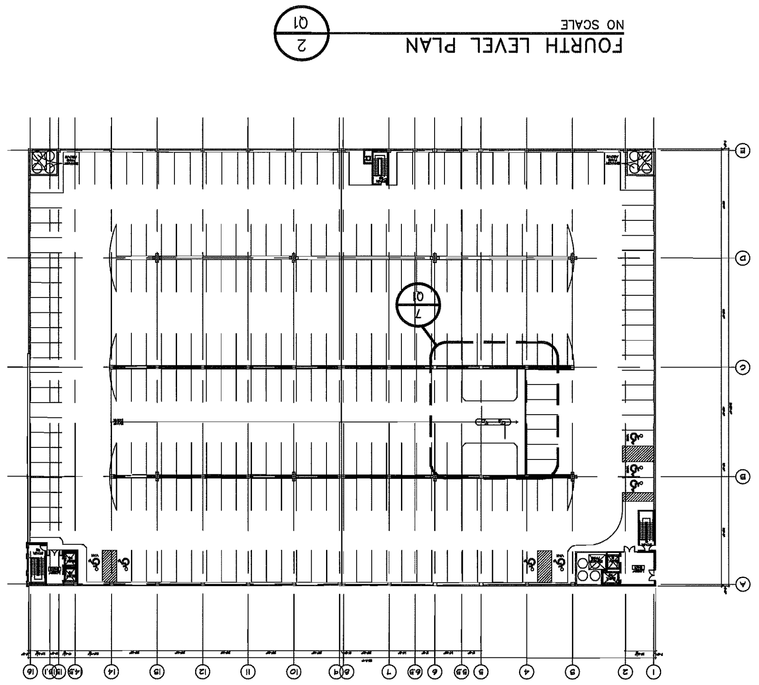

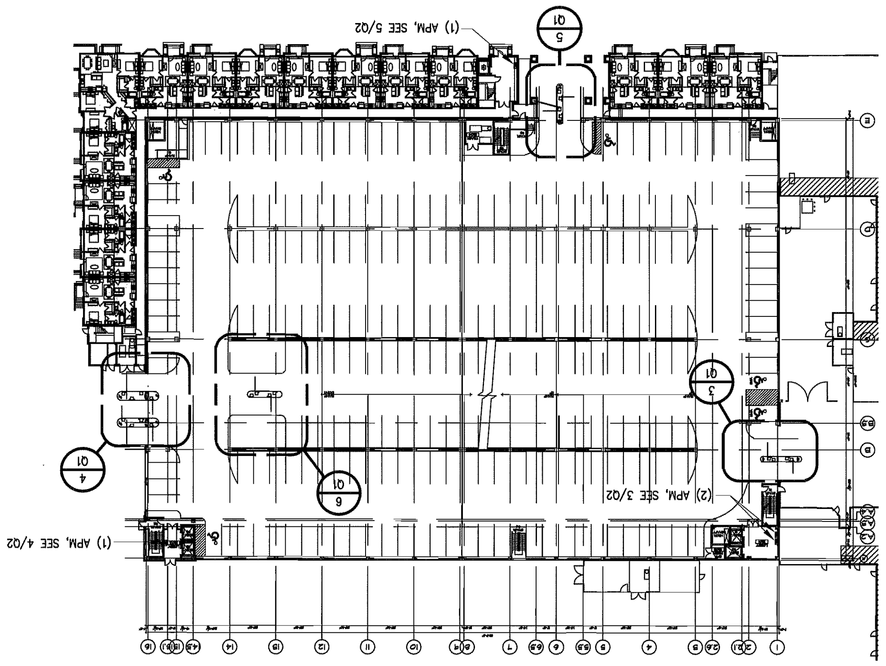

GENERAL NOTE:
SEE SHEET Q2 FOR EQUIPEMENT LEGEND, LANE INDEX, ADDITIONAL DETAILS AND NOTES AND SCHEDULES.

Eddy Street Commons
Phase II
Parking Garage
Project Number 108-004

Owner
City of South Bend, Indiana

Construction Manager
Kite Realty Group
30 South Meridian Street, Suite 1100
Indianapolis, Indiana 46204
317-577-5600

Structural Engineer
Fink, Roberts & Petrie, Inc.
4040 Vincennes Circle, Suite 300
Indianapolis, Indiana 46268
317-872-8400

Architect
Looney Ricks Kiss
175 Toyota Plaza, Suite 600
Memphis, Tennessee 38103
901-521-1440

Mechanical, Electrical & Plumbing Engineer
Circle Design Group
5510 South East Street, Suite F
Indianapolis, Indiana 46227
317-781-6200

Parking Consultant
Walker Parking Consultants
6602 East 75th Street, Suite 210
Indianapolis, Indiana 46250
317-842-6890

Civil Engineer/Landscape Architect
The Troyer Group
550 Union Street
Mishawaka, Indiana 46554
574-259-9976

100% Construction Documents
January 23, 2008

FINK ROBERTS & PETRIE, INC.
Consulting Engineers
4040 Vincennes Circle Suite 300
Indianapolis, Indiana 46268

SHEET NO.
Q1

PARKING ACCESS AND REVENUE CONTROL
DETAILS AND SCHEDULES

DESIGN DATE 01/09/08
DESIGN PROJECT NO. 07097
DESIGN DRAWN BY KMM
CHECKED BY SMP

CERTIFIED BY
STEVEN F. TOTTEN
REGISTERED
No. 18291
STATE OF INDIANA
PROFESSIONAL ENGINEER